shaping the future.

ZPAS GROUP

solutions for connections

shaping the future.

CATALOGUE OF ZPAS GROUP PRODUCTS

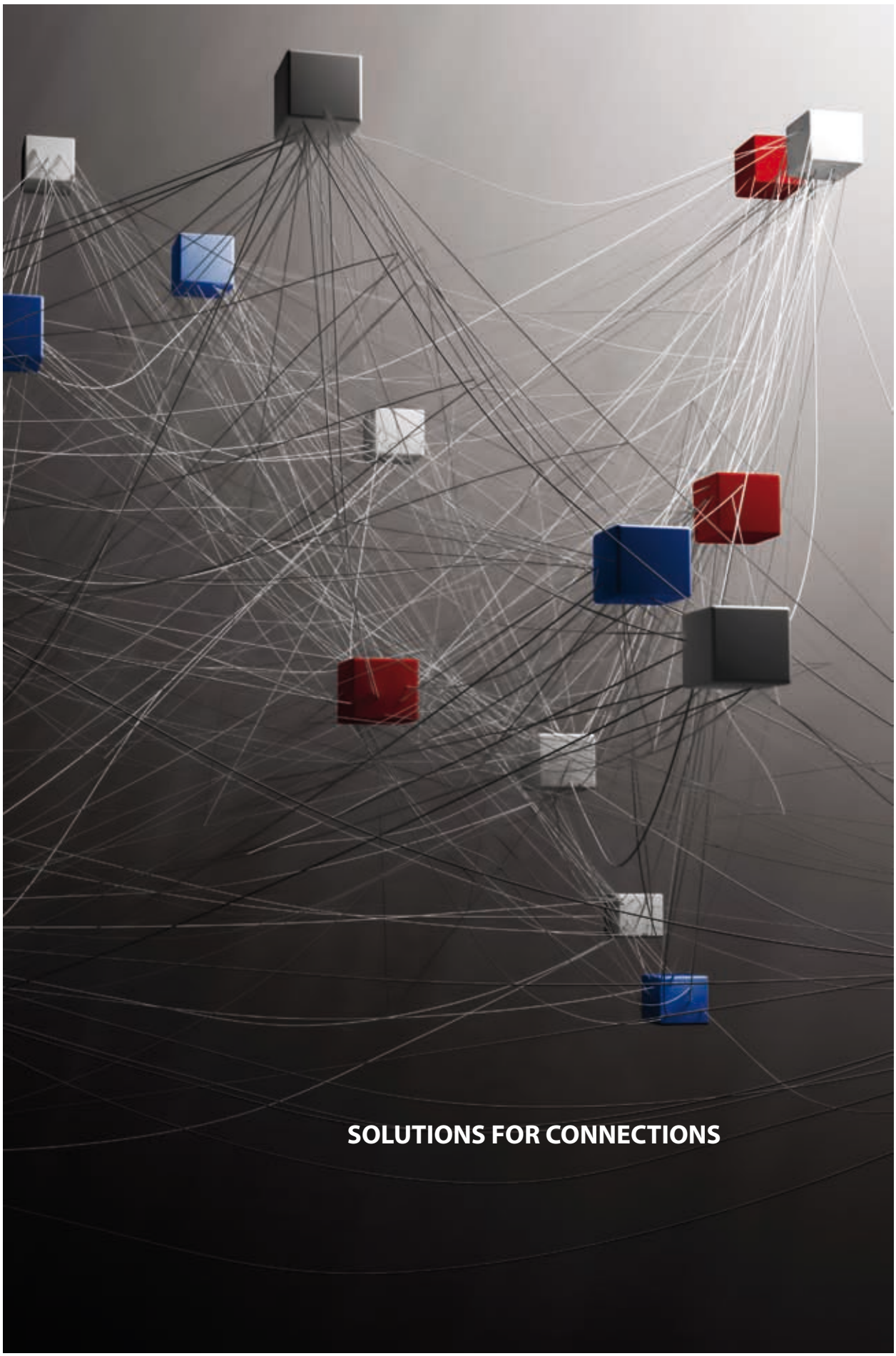
SOLUTIONS FOR CONNECTIONS

DEAR CUSTOMERS,

this catalogue gives you modern, versatile and technologically advanced solutions for data communications, telecommunications, power engineering and automation.

In no small part thanks to you and your suggestions, we have improved functionality of the well-known products and solutions to face up to ever more stringent standards and constantly changing needs.

We give you a range of new products and solutions such as next-generation SMART multimedia kiosks, closed-profile bolted SZE3 industrial cabinet with unlimited possibilities for expansion and built-ins, as well as the quiet, efficient and energy-saving PWS2 roof fan.

We are confident that with our knowledge, extensive experience and respect for the work of human hands on every level of product creation, the solutions offered by the ZPAS Group are of the highest, world-class quality.

Piotr Baranowski
President of the
Management Board

Sometimes when I consider
what tremendous consequences
come from little things …
I am tempted to think …
there are no little things.

Bruce Barton

CUSTOMERS · INDUSTRIES

TELECOMMUNICATIONS

It is difficult to imagine social and economic development without continuous investment in telecommunications. To meet the market demand, ZPAS Group offers products that are dedicated to this economy sector. We supply investors who expand and create new telecommunications networks with all types of enclosures and accompanying equipment.

For more information see page 27

DATA COMMUNICATION

In the current decade, constant data expansion remains the biggest challenge of the data communication industry. To meet these requirements, ZPAS creates innovative solutions for 19" data communication cabinets. Our comprehensive range includes also structured wiring components, optical distribution frames and active devices, consoles, KVM switches, and UPS units.

For more information see page 29

DATA CENTRES

The continuity of corporate business and maintaining services at the highest level depends on uninterrupted operation of computational units and active devices found in data centres. To ensure access to information, you must follow the highest standards of quality for systems that affect company operation.

For more information see page 31

POWER INDUSTRY

With the growing demand for electricity, the energy sector has been undergoing profound changes in recent years. See what interesting ZPAS has in offer for this economy sector.

For more information see page 33

AUTOMATICS

In today's world, manual control of industrial processes is a thing of the past. ZPAS Group has prepared products dedicated to this technology branch to provide possibilities for installing control devices, as well as ready-to-use solutions for manufacturing process control.

For more information see page 35

PUBLIC SECTOR

The unique combination of plant production capacity with highly-skilled workers of design departments forms solid foundation for development of many non-standard products which go to the public sector along with the standard offer.

For more information see page 37

TABLE OF CONTENTS

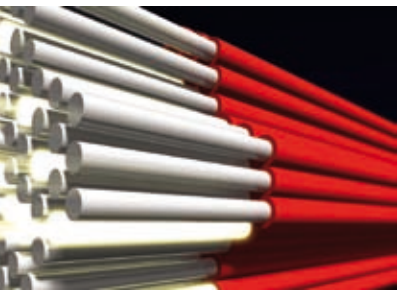

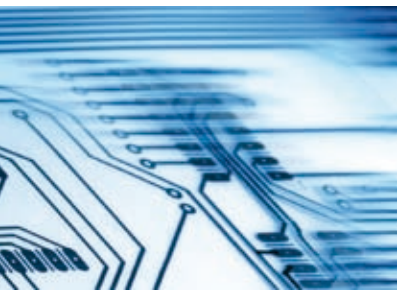

ZPAS GROUP 008

DATA COMMUNICATION COMPONENTS AND SOLUTIONS ... **038-269**

Floor-standing cabinets 041
Wall-mounted cabinets and frames 081
Open racks 095
Accessories for cabinets and open racks 103
Power supply systems 129
Fire extinguishing systems and IT-Rooms 157
Server room cabinet installation concepts 161
Ventilation and air-conditioning systems 181
Consoles and KVM switches 195
Monitoring and access control systems 205
Compact data center for offices 213
Copper cabling components 219
Fibre optic enclosures and accessories 241
Cable management 259
SOHO 10" cabling system 267

INDUSTRIAL ENCLOSURES **270-345**

SZE2 floor-standing cabinets 273
Accessories for SZE2 cabinets 285
SZE3 floor-standing cabinets 319
SWN wall-mounted cabinet 339

CONTROL DESKS **346-353**

OUTDOOR CABINETS **354-401**

CONTROL CABINETS & ELECTRIC SWITCHGEARS **402-427**

DISPATCH WORKSTATIONS **428-449**

MIMIC BOARDS **450-479**

MULTIMEDIA KIOSKS **480-507**

CATALOGUE NUMBER INDEX 508

INDEX OF NAMES OF PRODUCTS AND SOLUTIONS 516

PICTOGRAMS

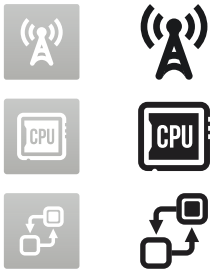

telecommunications

data communication

data centres

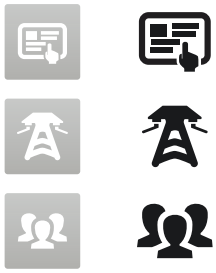

automatics

power industry

public sector

---

data communication standing cabinet

data communication wall-mounted cabinet

data communication rack

electricity

internet/computer network

power/telecommunications outdoor cabinet

ventilation/fan

power supply

power generator

fire-extinguishing apparatus/ fire extinguishing system

KVM console

control/monitoring

cooling/air conditioning

Poland/continent

circulation/air flow

server room

wiring/cable

cable routes/ cable management system

load capacity

industrial electrical/control cabinet

control desks

dispatch room/control room

multimedia kiosks

comprehensive projects

CATALOGUE COMMUNICATION SYSTEM

GROUP

ZPAS GROUP

solutions for connections

Catalogue communication is based on three colours.
Grey colour marks all information about entire ZPAS Group consisting of two interconnected and cooperating companies.

ZPAS

ZPAS

for your connections

Blue colour in the catalogue marks departments, products and services provided by ZPAS, ranging from standard, mass-produced enclosures, through special versions of products to complex projects.

ZPAS-NET

ZPAS

connections for you

Red colour marks departments, products and services of ZPAS-NET which deals mainly in the production of outdoor cabinets, dispatch desks and matrix boards,
and also in electrical installation, production and sale of structured cabling components.

FUTURE IS TODAY

ZPAS is a future-oriented company that puts people, product quality and the environment first.

We are driven by the motto that is continuous development and providing comprehensive solutions developed together with our partners.

Being fascinated about the latest technologies and driven by innovation, we give attention to detail in the broad sense.

Thanks to such a vision, our server rooms, solutions for telecommunications, automatics and energy meet the changing trends of the future.

The growing satisfaction of our Partners, reflected by the turnover dynamics, is a proof that we have chosen the right path.

Let this catalogue we give you be the harbinger of the new standard of cooperation.

PLANNING

IMPLEMENTATION

QUALITY ASSURANCE

GROWTH AND EXPANSION

ZPAS GROUP

With its 40-year experience, ZPAS Group meets the demands of the future and combines comprehensive solutions of ZPAS S.A. and ZPAS-NET sp. z o.o. which provide the market with a wide range of products by complementing each other.

ZPAS specializes in the production of data communication and industrial enclosures, whereas ZPAS-NET deals in manufacturing of networking and energy solutions. This combination is driven by the "solutions for connections" idea that responds to the needs of the market.

ZPAS Group has more than 17 000 m^2 of production space based in three locations. The head office of the managing board of ZPAS Group and ZPAS S.A. is located in Przygórze where special, individual and small-series products are manufactured. Nowa Ruda - Słupiec is the location of the warehouse and production hall for series and standard products of ZPAS S.A. In Drogosław, production facilities and offices of ZPAS-NET, a ZPAS S.A. subsidiary, are located.

ZPAS Group is not all about the highest-quality products that meet the requirements of modern high-tech technologies. It is also a staff of skilled people who provide technical assistance and advice when choosing products. Providing professional help, we try to come up with the best solutions for you.

We want our partners to know that we are open to their needs, which is why we provide training and organize presentations in order to introduce our offer and functionality of our products.

We do not stand in one place; on the contrary, we are constantly working on new solutions. We rely on modern technology, young, educated crew and dynamic actions.

With implementation of the quality and environment management system, our products have world-wide recognized certificate. The technology solutions that we use ensure special protection of the environment and the workers. To prove that, we have been awarded ISO 9001 and ISO 14001 certificates.

ZPAS Group is a brand that reflects commitment, passion, aspirations and reliability.

ZPAS

ZPAS PRODUCT PORTFOLIO

ZPAS products include mainly high-tech and thus easy-to-use, enclosures, accompanying equipment and infrastructure that are used mainly in data communication and power industry.

From simple support structures to complex installations for data centres. From single cabinets to fully equipped power structures. Regardless of their size and intended use, whether you take them in your hands or walk inside them, for smooth integration you always need only your intuition with a little bit of our support.

The main domain of our business gives us with nearly 40 years of experience which we successfully use, serving diverse industries. Also our engineering staff has necessary knowledge and experience. It is a team willing to face any challenge.

Advanced 3D design support software allows us to present the finished product that is still under construction. We can give a preview of the project in the form of technical documentation and a virtual model that accurately reflects its appearance.

ZPAS product range is not limited to European dimensions – it is a world-class range.

Anticipating the needs of our customers, we follow a growth strategy that ensures constant high standard of production methods at all stages.

Numerically controlled machines guarantee high and consistent quality. They are also a manifestation of using the most modern and innovative production methods, while maintaining high standards of worker safety and environmental protection.

By using high-tech manufacturing processes, we can optimize costs even for individual orders, while maintaining the highest quality, which is the basis of our offer.

DATA COMMUNICATION ENCLOSURES

COMPREHENSIVE SOLUTIONS FOR SERVER ROOMS

INFORMATION KIOSKS

INDUSTRIAL ENCLOSURES

CONTROL DESKS

ZPAS

Originally a small experimental production facility, we evolved to the leading manufacturer of enclosures with an established position in the market. Currently, production is run in two large manufacturing facilities. In the headquarters in Przygórze, we manufacture customized products for individual customer needs. In Słupiec, mass and standard production is run. This is also the location of our main warehouse for finished products. By implementing a number of interesting projects, we are constantly expanding manufacturing space and modernizing our machinery. All this would not happen without the enormous commitment of our employees who took care of continued development while becoming the owners of the company.

ZPAS S.A. portfolio covers enclosures for indoor and outdoor use, in assembled version and for self-assembly, with protection class ranging from IP 20 to IP 65. Each enclosure that meets all these requirements has a separate production process.

Before a finished product gets delivered into your hands, it must undergo a long way. The whole process begins with determining all parameters of the enclosure for the constructor to be able to make right drawings for your approval. Next, the technologist prepares documentation and software for our machines. A well-planned organization of all manufacturing processes gives us the ability to fully utilize our production capacity.

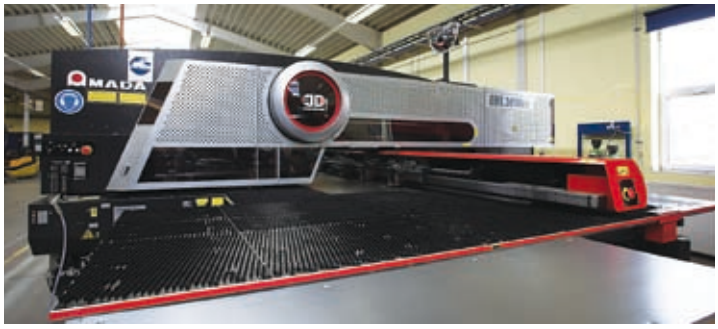

A metal sheet undergoes punching, laser cutting, bending and welding. Next, there is manual bench work to prepare the material for the next operation, i.e. powder coating. Depending on the size of the series, a semi-finished product goes to the fully automated paint shop, or semi-automated paint shop in case custom colours are demanded. Items that require a higher degree of protection are sealed by pouring seals in the right places. The complete finish of products is overseen by manufacturing foremen who organize and supervise the production stages. This is how cabinet components, frame, mounting profiles, doors, shelves and other are made. Next, assembly stage takes place. This is when enclosures are put together. For structures intended for self-assembly, individual elements or subassemblies are put into separate packages.

Before they are ready for sell, products undergo quality control. Once the product is green-lit, it goes to the warehouse for finished goods, waiting for your order.

Years of experience have taught us that you can always improve certain processes and perform your tasks better to constantly improve the competitiveness of your products.

ZPAS-NET

ZPAS-NET PRODUCT PORTFOLIO

ZPAS-NET sp. z o.o. was established on 1 June 2004 as a result of separating it from ZPAS S.A. structure.

The company is based in Nowa Ruda - Drogosław, in the sub-zone of Wałbrzych Special Economic Zone. ZPAS-NET facility has an office area of 800 m2 and the production area of 2500 m^2.

The company manufactures products needed to create modern network infrastructure and monitoring and control systems, as well as products dedicated for the power industry that uses intelligent IT solutions. ZPAS-NET sp. z o o was created to meet expectations of our partners for integration, equipment and turnkey solutions.

Seeking innovative solutions, we meet the requirements of modern technologies in the sectors in which we operate. Our brand brings to mind high quality, professional and reliable implementation of projects that meet the standards of advanced technical solutions.

Thanks to our experienced engineering staff, we achieved a leading position in the Polish market of manufacturers of outdoor cabinets and mimic boards.

Through the first years of operation as ZPAS S.A. and now making our own brand, we do a lot of work related to construction of power and telecommunications facilities.

ZPAS-NET products have been recognized not only in Poland but also in Europe and beyond.

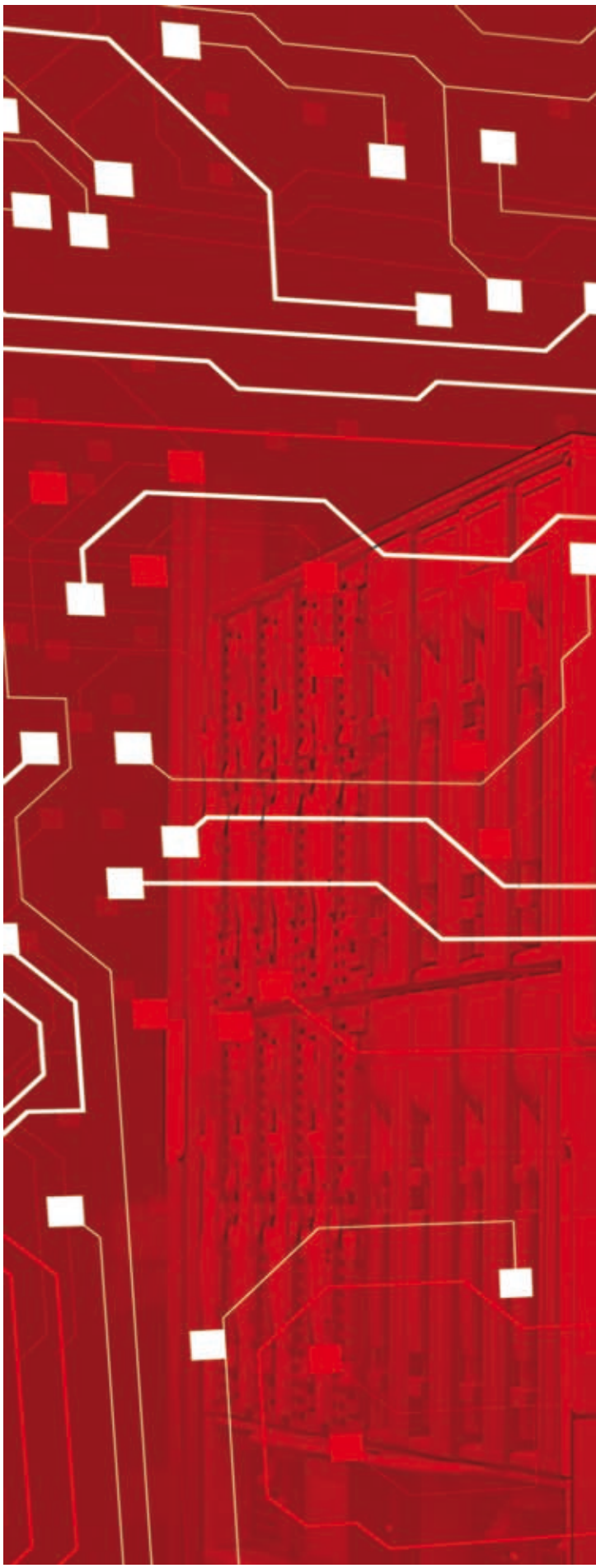

OUTDOOR CABINETS FOR TELECOMMUNICATIONS AND POWER INDUSTRY

STRUCTURED CABLING SYSTEMS

OPTICAL DISTRIBUTION FRAMES

CONTROL CABINETS

ELECTRIC SWITCHGEARS

DISPATCH DESKS

MIMIC MATRIX BOARDS

COMPREHENSIVE POWER CONTROL ROOM PROJECTS

ZPAS-NET

In the modern business environment that is subject to constant changes and modifications, our range has an important place when it comes to demanding solutions. We strive to deliver not only products but most of all the ability to create solutions for both individual needs and complex projects.

Outdoor cabinets manufactured by ZPAS NET are made of aluminium, stainless steel or aluminium-zinc sheet. Structures are assembled on the production floor. With these materials, we make cabinets ready to face severe weather conditions.

If the customer wishes so, outdoor enclosures can be equipped with electrical equipment produced by us. We equip also the cabinets supplied to us by ZPAS or other manufacturers of indoor and outdoor enclosures. If necessary, modular expansion and free use of reserve space is possible.

We also specialize in making control desks produced on the basis of final documentation or according to individual client guidelines. Our engineering department works on the project details in consultation with the client. The effect of this work is presented in the visualization that is to show appearance and location of the desktop. After making corrections and approving the project, we begin assembly, creating products with high quality materials.

An important safety feature for trouble-free operation of communication systems is the reliability of the cabling infrastructure. With 40 years of industry experience, we take pride in cooperating with proven and trusted suppliers that are recognized in the market. They supply us with high quality products certified by independent certified laboratories.

Seeing the dynamic growth of the number of fibre-optic network users, we have developed the OptiTel product family that allows for flexible configuration of optical links, switching reserve links, adding new devices and a number of measurements.

Meeting customer expectations, we specialize in providing complex services. These include design development, making necessary arrangements, legal services, cabinet prefabrication, delivery and installation of cable routes, manufacture and assembly of dispatcher control panel and mimic boards, constructing power lines and transformer stations with equipment, carrying out commissioning and measurement works and providing warranty and post-warranty repairs.

Information kiosks
- pages 480-505

19" cabinets and racks
- pages 41-128

Structured cabling
- pages 219-240

Fibre-optic components and distribution frames
- pages 241-257

Dispatch desks
- pages 428-449

APPLICATIONS OF ZPAS GROUP PRODUCTS

Dispatch desks - pages 428-449
Mimic matrix boards - pages 450-476
Comprehensive control room projects - pages 477-479
Industrial enclosures - pages 270-345
Control cabinets and electric switchgears - pages 402-427

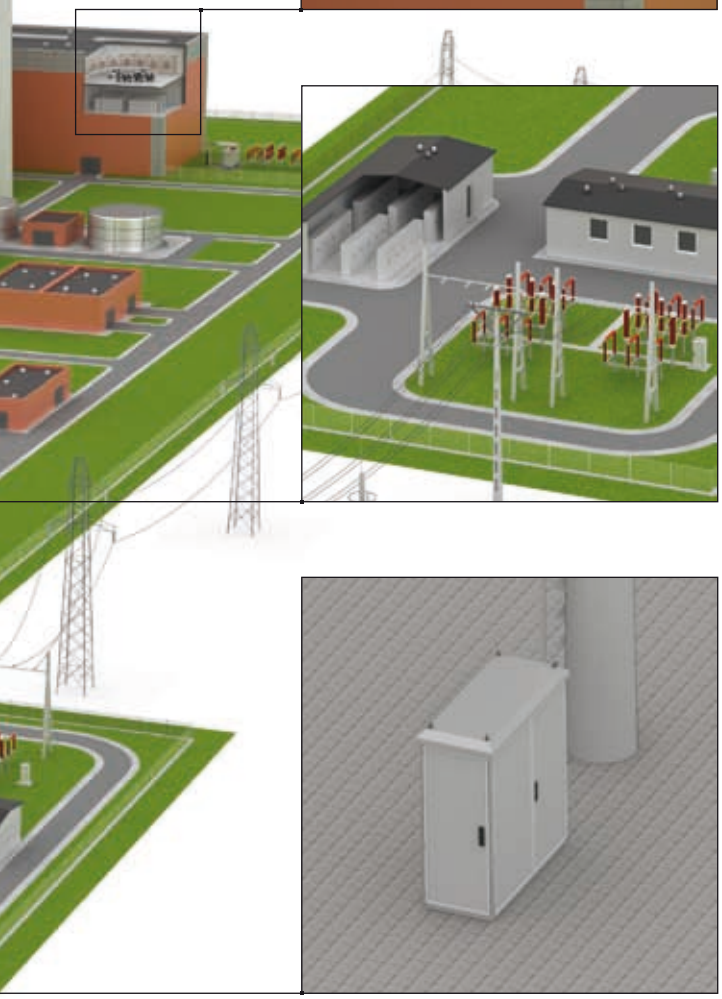

Cabinets for power stations:
- protection cabinets
- auxiliaries switchgears
- meter cabinets
- telecommunication cabinets
- wiring cabinets

Pages 404-411

Outdoor cabinets:
- for subscribers' access systems
- for power supply systems
- any structures according to customer's requirement

Pages 354-401

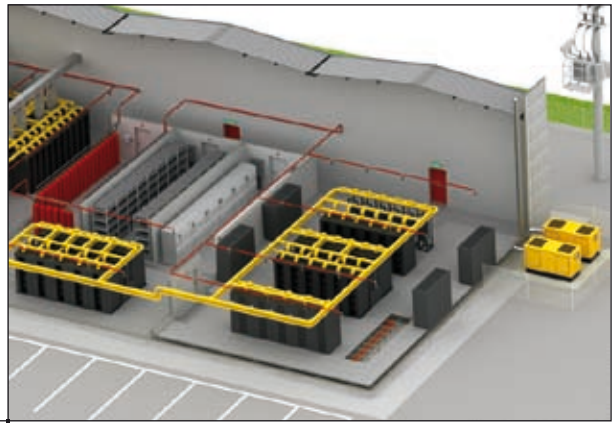

Solutions for data centres:
- server cabinets - pages 50-55, 64-67, 163
- data box - cold/hot aisle - pages 166-171
- precision air-conditioning systems - page 191
- backed-up and standby power supply systems - pages 148-155
- power management systems - pages 130-147
- fire extinguishing systems - pages 158-159
- monitoring and access control systems - pages 205-211
- cable management - pages 259-265

ZPAS WORLWIDE

POLAND

ZPAS S.A., Przygórze 209, 57-431 Wolibórz
the company's headquarters, production facility,
sales department
phone +48 748 720 100
fax +48 748 724 074, e-mail: info@zpas.pl

ZPAS S.A., ul. Spacerowa 59, 57-402 Nowa Ruda - Słupiec
production facility, goods warehouse, shipments

ZPAS-NET sp. z o.o., ul. Górnicza 19, 57-401 Nowa Ruda
the company's headquarters, production facility,
sales department, goods warehouse, shipments
phone +48 748 735 444, fax +48 748 725 856
e-mail: info@zpas.net

ZPAS Group Technical and Commercial Office in Warsaw
ul. Domaniewska 39a (HORIZON PLAZA, room 531),
02-672 Warszawa
phone +48 222 082 712, e-mail: warszawa@zpas.pl

ZPAS Group Technical and Commercial Office in Wrocław
ul. Klecińska 123 (WPT – ALFA building), 54-413 Wrocław
e-mail: wroclaw@zpas.pl

Network of authorized distributors
www.zpas.pl/distributors

Network of certified installers
www.zpas.pl/installers

ABROAD

ZPAS Group Office in Germany:
ZPAS GROUP GmbH
Torgauer Strasse 231-233
04347 Leipzig
Deutschland
Phone:
+49 (0)341-27 10 229
Fax:
+49 (0)341-27 10 200
E-Mail:
info@zpasgroup.de

ZPAS Group Office in England:
ZPAS LTD
Unit 4 Mundells Court
Welwyn Garden City
Hertfordshire
AL7 1EN
United Kingdom
Phone:
+44 (0)170 732 7316
E-mail:
sales@zpasgroup.co.uk

Distributors of ZPAS Group products in the following countries:

- Austria
- Belarus
- Bosnia and Herzegovina
- Denmark
- France
- Germany
- Great Britain
- Hungary
- Iceland
- Kazakhstan
- Latvia
- Lithuania
- Malta
- Morocco
- Netherlands
- Norway
- Russia
- Serbia
- Sweden
- Switzerland
- Ukraine

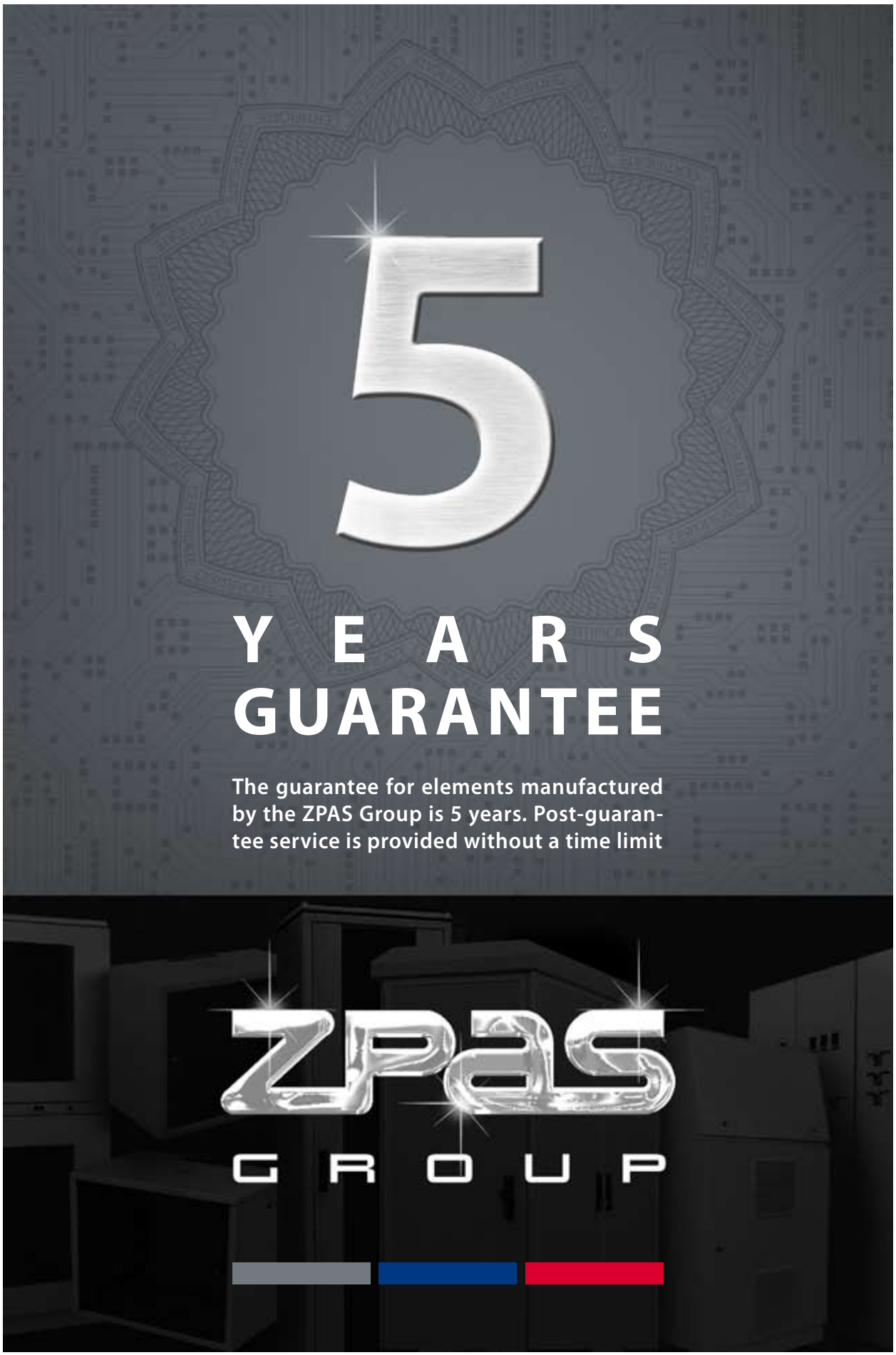
5
YEARS
GUARANTEE
The guarantee for elements manufactured by the ZPAS Group is 5 years. Post-guarantee service is provided without a time limit
ZPAS
GROUP

REFERENCES

Polskie Sieci Elektroenergetyczne Operator S.A.

Enea

Enertel S.A.

PGE Elektrownia Opole S.A.

Telekomunikacja Polska S.A.

CERN

Energotest

Henbud

Molex

INTEGER.pl S.A.

Elfeko S.A.

Volkswagen Motor Polska Sp. z o.o.

ATM S.A.

Carion

Lukas Bank

Nokia-Siemens

Ericsson

For more references see:
www.zpas.pl/references

Selected outdoor cabinet projects:
page 357

Selected dispatch desk projects:
pages 430, 439-448

Selected mimic matrix board projects:
pages 453, 462-479

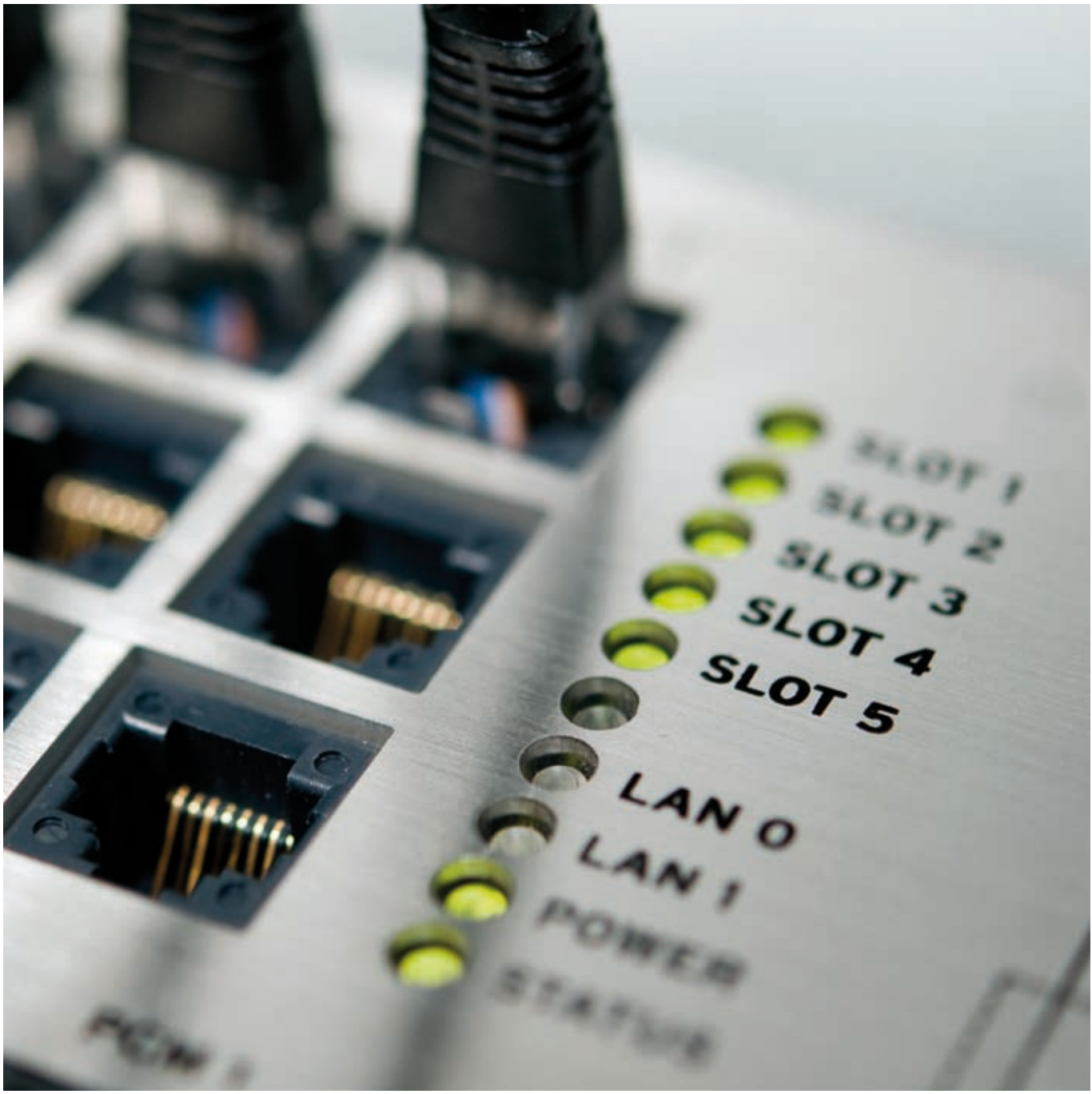
SLOT 1
SLOT 2
SLOT 3
SLOT 4
SLOT 5
LAN 0
LAN 1
POWER
STATUS

OUTDOOR CABINETS
pages 354-401

FIBRE OPTIC ENCLOSURES
pages 241-257

19" CABINETS AND RACKS
pages 41-128

POWER SUPPLY SYSTEMS
pages 129-156

VENTILATION AND AIR-CONDITIONING
pages 181-194

Today's globalization of all business processes makes continuous development of telecommunications inevitable – transmission of all kinds of information over a distance with appropriate pre-processing and protection against unauthorized access.

For telecommunication systems to work, one must install various types of electronic and fibre-optic equipment which allows for processing information to signal, sending it (possibly with gain) and finally receiving the signal and re-processing it to the information.

The necessary equipment is installed in collective enclosures called telecommunications cabinets that ensure well organization and proper working conditions. ZPAS Group's offer includes cabinets for installation inside buildings, as well as cabinets suitable for outdoor use when there is not enough space and equipment must be installed close to the end customer (enclosures madeof corrosion-resistant materials and ensuring adequate thermal insulation). In case of all telecommunication cabinets we offer also necessary equipment: all kinds of mechanical components (shelves, plinths, masking panels, supporting structures, blanks, etc.), electrical equipment (distribution panels, connector panels, surge protection, power supply), systems for adequate weather conditions (heating, ventilation, air conditioning, monitoring) and fibre-optic components (distribution frames, pigtails, patch cords). The company has also capacity to provide full-scale services: cabinet installation, splitting devices, grounding, connecting power supply, etc.

L1107
L1104
L1112
L1108

19" CABINETS AND RACKS
pages 41-128

STRUCTURAL CABLING
pages 219-240

SOHO 10" CABLING SYSTEM
pages 267-269

FIBRE-OPTIC COMPONENTS AND DISTRIBUTION FRAMES
pages 241-257

POWER SUPPLY SYSTEMS
pages 129-156

CABLE MANAGEMENT
pages 259-265

VENTILATION AND AIR-CONDITIONING
pages 181-194

The ongoing computerization of telecommunications systems on the one hand, and the use of advanced technologies in information systems on the other requires better and better 19" data communication cabinet solutions.

We have open and closed enclosures for wall-hung and floor installation. Each product meets the highest requirements in terms of use and safety. By controlling all stages of product manufacturing, we provide a solution that meets the highest quality requirements. Through the use of the latest technological and construction solutions, we create an easy-to-use compatible product. Using ZPAS solutions gives you efficiency and economy.

Our data communication products are essential in all server systems, IT networks, disk arrays and data transmission safeguards. Our product range includes also structured wiring components, optical distribution frames and active devices, consoles, KVM switches as well as UPS units. ZPAS products are also recommended for use on production lines, in A/V recording studios and for an individual user.

ZPAS

SERVER CABINETS
pages 50-55, 64-67, 163

DATA BOX
pages 166-171

SERVER CABINETS IN ROWS
pages 172-173

VENTILATION AND AIR-CONDITIONING SYSTEMS
pages 192-188, 181-194

POWER SUPPLY SYSTEM
pages 129-156

FIRE EXTINGUISHING SYSTEMS AND IT-ROOMS
pages 157-160

MONITORING OF AMBIENT CONDITIONS
pages 206-209

ACCES CONTROL
pages 210-211

In the era of globalised business process information, appropriate protection against business and operating risks is vital to secure company's uninterrupted operation. Unlimited and complete 24/7/365 access to information is currently becoming one of the most valuable business resource. In many cases, data stored in corporate data centres represent the most precious assets of the enterprise. Hence, important data require a suitable level of protection and security. A server room with adequate power systems, cooling systems, access control and detection of various types of threats ensures comfort and safety of operation and the right level of corporate data security.

ZPAS Data Center system is a complete solution which includes: server cabinets, Data Box, cold or hot aisle system, precision air-conditioning systems, backed-up and standby power supply systems, power management systems, fire extinguishing systems, ITrooms cabins, access control and burglary alarm system, climate monitoring system.

ZPAS S.A. provides also full-scale implementation of Data Centre structures. Basing on the experience of our specialists, we support our customers at every stage of the project, starting from the preparation of the concept, design and implementation of the appropriate solution tailored to the needs of the company and its customers.

INDUSTRIAL ENCLOSURES
pages 270-345

CABINETS FOR POWER STATIONS
pages 404-411

ELECTRIC SWITCHGEARS
pages 412-417

CABINET PREFABRICATION
pages 418-427

DISPATCH DESKS
pages 428-449

MIMIC BOARDS
pages 450-479

Given the current demand for electricity, development and reliability of power systems is a priority in the modern world. Power industry can be divided into two sectors. First one – generation, meaning power plants, combined heat and power stations that produce energy. Second one – transmission grids which transfer generated electricity for consumption. Since the very beginning, our company has been developing devices and systems for utility industry. Our offer is dedicated to both sectors presented.

Our products include typical electric switchgears and power distribution cabinets for specific projects, manufactured on the basis of our own industrial enclosures SZE2, SZE3 and SWN. We also produce mimic matrix boards used in many control rooms for mapping patterns of transmission grids, monitoring and control systems and all kinds of processes and dispatch desks used for continuous operation of controllers. More and more different applications for the power industry are made in outdoor enclosures which are described in more detail in a separate section.

Many years of experience in the industry make our company a trustworthy and reliable partner who offers support at every stage of the manufacturing process. From design to the final product implementation at the customer's facility. Our own Design Department allows us to adjust the solution to even the most demanding customers. We would be delighted to establish collaboration with you.

Please have a closer look at what we have on offer for the power sector.

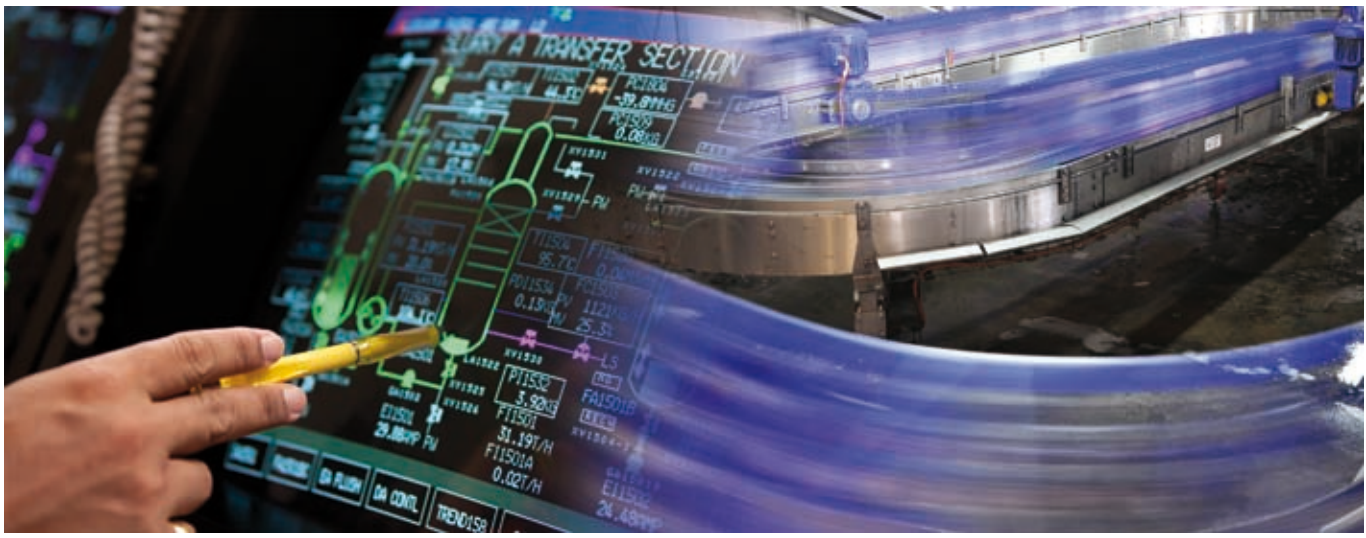
A TRANSFER SECTION

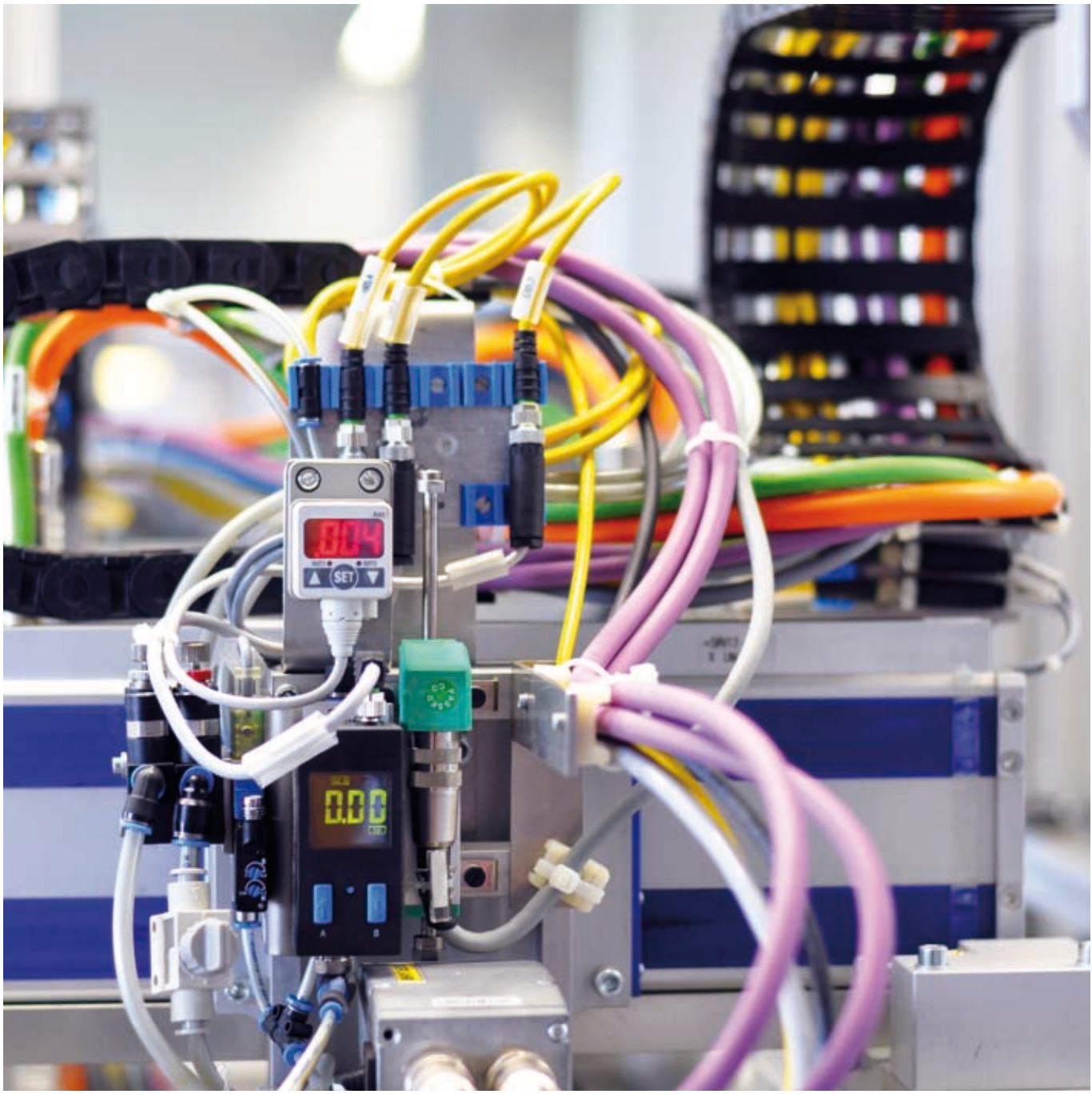
SET
0.00

INDUSTRIAL ENCLOSURES
pages 270-345

CONTROL DESKS
pages 346-353

CABINET PREFABRICATION
pages 418-427

CONTROL CABINETS
pages 418, 420, 422-423, 425-427

ZPAS Group offers industrial automation services based on our own devices, as well as the devices of all renowned manufacturers.

We have solutions for: power stations, sewage treatment works, water treatment plants, pumping stations, factories of ceramic building materials, mines, coking plants, heating plants and control rooms of all industrial plants.

We offer you our own devices for constructing automation systems: mimic matrix boards for process visualization, PDM and HW dispatch desks, PSL control desks, SZE2, SZE3 and SZB enclosures for automation equipment, climate monitoring system and control access system for enclosures, server rooms, switchrooms, etc.

We also prefabricate power and control sets for all industries and for a number of uses – from controlling machine tools to controlling production lines. Depending on customer preferences, in our applications we use controllers and power and control equipment offered by most of the companies operating in the European market, including: Apator, ABB, Beckhoff, Eaton, J. Muller, Legrand, Schneider, Siemens, GE, Pokój, Phoenix Contact, Wago, Weidmüller, Dehn, Relpol, Finder, etc.

Our applications are based on 40 years of experience. Each, even the most demanding customer will find something in our solutions for themselves.

We always make sure that our products are state-of-the-art, reliable and perfectly safe. As part of our ongoing commitment to client satisfaction, we are pleased to implement any solutions suggested by our customers.

We are looking forward to doing business with you.

TOLL GATES

SELF-SERVICE PARCEL MACHINES

MULTIMEDIA KIOSKS
pages 480-507

The unique combination of plant production capacity with highly-skilled workers of design departments forms solid foundation for development of many non-standard products intended for the public sector.

The emergence of a new product is brought about by needs reported by our customers combined with new technical advancements in electronics, electrical and mechanical industries. Examples of such collaboration include electronic information kiosks that are commonly known as infokiosks or infomats. Depending on their intended use, we fit them with additional devices: printers, code and card readers, scanners, coin validators, etc. Often they function as specialized equipment in laboratories or on production lines.

They can be used even for constructing self-service parcel machines, ticket machines, vehicle charging stations or toll gates. The devices can serve as vending machines for products or services. They can also provides services such as giving data, printing documents, providing forms to fill out, etc., supporting operation of public buildings.

The development of such products is supported by EU funds.

DATA COMMUNICATION COMPONENTS AND SOLUTIONS

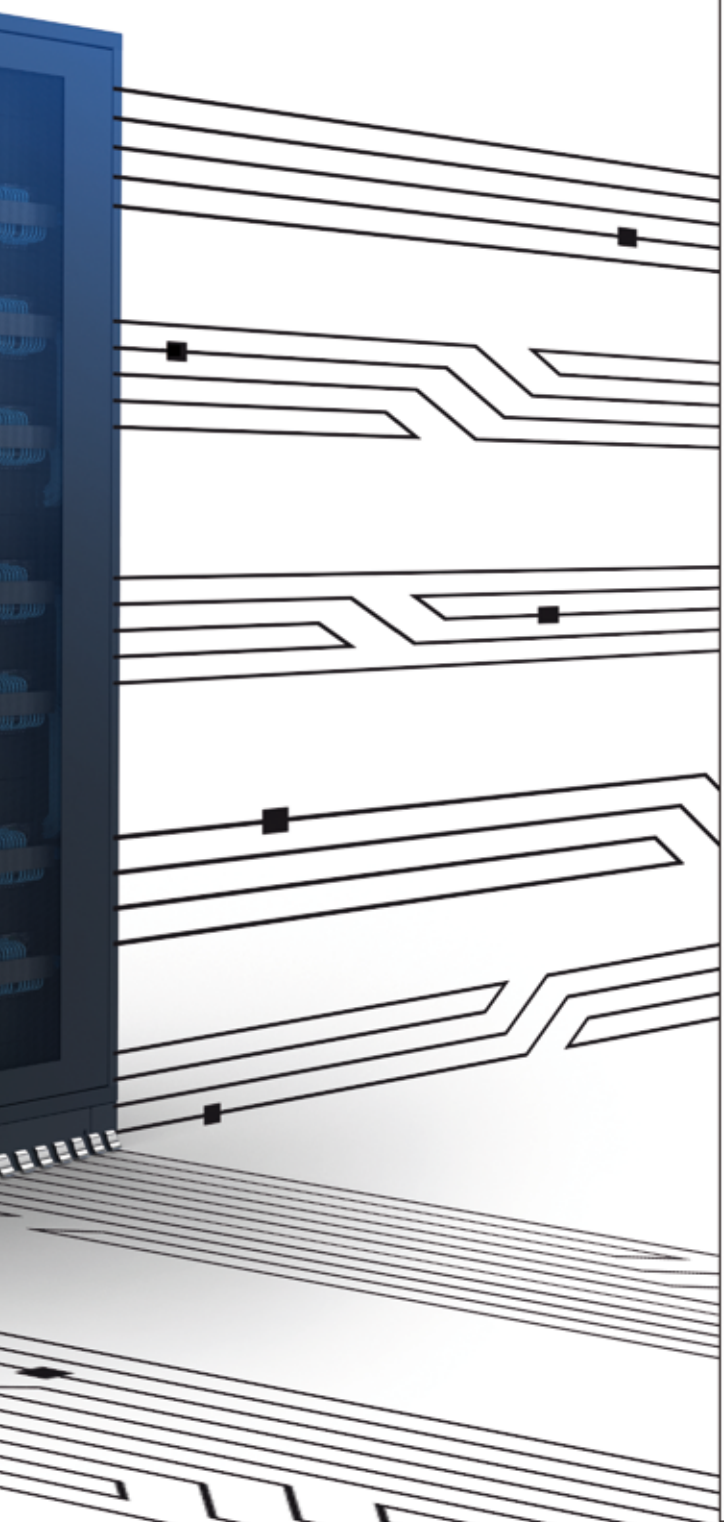

Floor-standing cabinets 41-79
SZB , SZB SE, OTS1, SZB DO, DSR, SZE2 PC, SZBk, SJB, SJB Silent, SZU 42
Wall-mounted cabinets and frames 81-94
SU, SD2, SJ2, SJK, RN, RNO 82
Supplementary accessories for wall-mounted cabinets 92
Open racks 95-101
SRD, SRC, SRX, SRK 96
Accessories for cabinets and open racks 103-128
Base 104
Doors and side panels 109
Shelves, drawers, pockets 111
19" frame and fixing accessories 117
Earthing elements 120
Baying cabinets in rows 121
Lighting, maintenance and cleaning agents 122
Masking items 123
Accessories for SZU cabinets 128
Power supply systems 129-156
Power strips and power distribution units 130
Backup power supply 148
Fire extinguishing systems and it-rooms 157-160
Extinguishing system for a single cabinet and for server rooms 158
IT-Room – safety and security for server rooms 160
Server room cabinet installation concepts 161-180
Examples of server rooms projects with ZPAS cabinets 162
DC 19" server cabinets 162
Data Box - cold/hot aisle 166
Server cabinets in rows 172
Closed-circuit cooling 174
Air flow management in server cabinets 176
Ventilation and air-conditioning systems 181-194
Ventilation systems 182
Air-conditioning systems 190
Consoles and KVM switches 195-203
Consoles 196
KVM switches 198
Accessories 202
Monitoring and access control systems 205-211
Oversee 206
ZPAS Access Control 210
Compact data center for office 213-217
Solutions for Small Business 214
Copper cabling components 219-240
ZPAS-NET telecommunication infrastructure 220
Patch panels 222
Boxes and faceplates 225
Keystones and sockets 229
Power VS telephone system 231
Tools and accessories for installers 235
Patch cords 238
Data transmission cables 239
Fibre optic enclosures and accessories 241-257
OptiTel fibre optic telecommunication enclosures 242
Cable reserve boxes and frames 248
OptiLAN fibre optic patch panels and distribution boxes 249
Fibre optic pigtails, patch cords and adapters 252
Cable management 259-265
Cable organizers and cable clamps 260
Cable holder 261
Cable ducts and trays 262
Cable channel systems 265
SOHO 10" cabling system 267-269
SKI2 10" wall-mounted cabinet 268
Accessories in the 10" standard 269

FLOOR-STANDING CABINETS

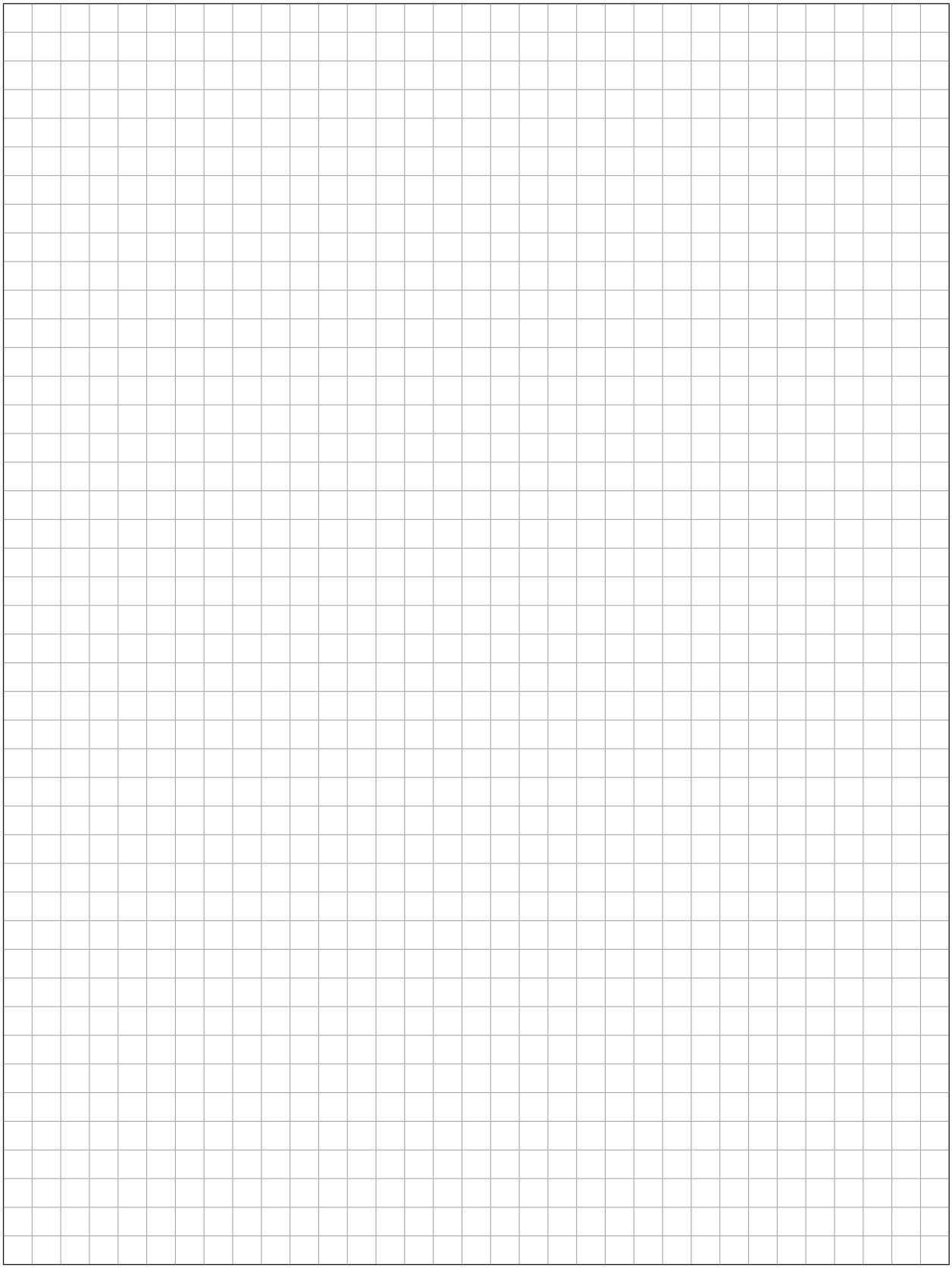

FLOOR-STANDING CABINETS

FLOOR-STANDING CABINETS

SZB 19" NETWORK CABINET

SZB cabinet in the basic configuration, 800 mm wide

STANDARD UNIVERSAL DATA COMMUNICATION CABINET

- Designed for indoor applications.
- Offered in 32 size variations (see the chart on page 45), of which 10 variations are in constant sale from our warehouse.
- Individual configuration:
  - multiple door, panel, roof options for maximum flexibility,
  - possibility to join cabinets in a row,
  - levelling feet, castor or plinth options,
  - multiple alternative cable entry options (brush, foam),
  - 21" mounting profiles also possible (in 800 mm wide cabinets),
  - individual configuration using simple coding.
- Wide range of supplementary accessories: shelves, drawers, fan units, power strips, blanking plates etc.
- Flexibility in manufacturing tailor-made cabinets.

SCOPE OF DELIVERY

Cabinet in basic configuration*
(cat. no. WZ-SZB-xxx-17AA-11-0000-011):

- frame,
- safety glass front door,
- two side panels,
- steel rear door shortened with 3 U module panel with brush strip, lockable,
- standard roof, raised, with perforated sides,
- 2 pairs of 19" mounting profiles,
- earthing bar and cables,
- cabinet placed on levelling feet.

*) Other configurations - see page 45.

SZB cabinet in the basic configuration, 800 mm wide

TECHNICAL DATA

Material:
Frame, side panels, solid steel door, roof, mounting profiles, C-profiles - sheet steel
Door with glass - sheet steel, acrylic glass
Glass door - mineral safety glass
Glass door with metal sides - mineral safety glass, sheet steel
Outriggers - zamak casting.

Protection degree:
IP 20 in accordance with EN 60529
(does not apply to brush cable entries).
On request, IP 41 can be achieved.

Surface finishing:
Frame, roof, panels, doors, plinth - powder paint, light grey (RAL 7035). All other colour options on request.

Mounting profiles, C-profiles - Al-Zn coated.

Maximum load capacity: see chart on page 43.

NETWORK CABINET SZB 19"

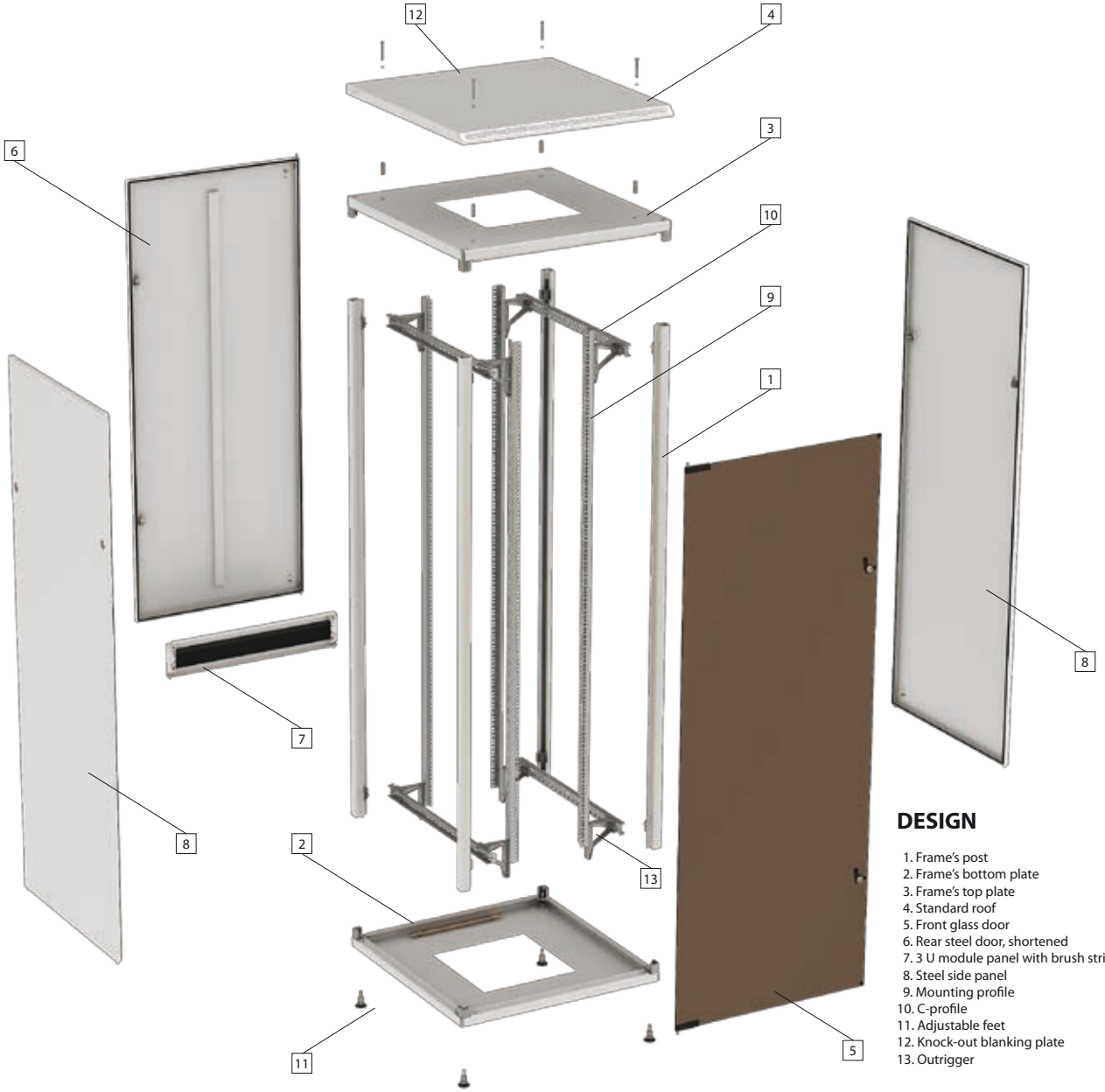

DESIGN

1. Frame's post
2. Frame's bottom plate
3. Frame's top plate
4. Standard roof
5. Front glass door
6. Rear steel door, shortened
7. 3 U module panel with brush strip
8. Steel side panel
9. Mounting profile
10. C-profile
11. Adjustable feet
12. Knock-out blanking plate
13. Outrigger

SZB cabinet 42 U, 800x800 mm in basic configuration
(Other available configurations are presented on pages 45-49)

INSTRUCTIONS FOR ORDERING SZB CABINET

1. When ordering the SZB cabinet, please provide the appropriate **catalogue according to the information presented on page 45**, which specifies the overall dimensions, type of doors, panels, roof and base.
2. The next step is to specify **catalogue numbers of supplementary accessories** (such as: shelves, blanking plates, power strips, fan units etc.). Supplementary accessories are delivered in separate packaging including fixing hardware. On request it is also possible to mount supplementary accessories in the cabinet.

MAXIMUM LOAD CAPACITY FOR SZB CABINETS

Base type	Maximum weight of equipment mounted in cabinet
levelling feet	1000 kg
castors - type 150	150 kg
castors - type 300	500 kg
plinth	1000 kg

SZB 19" NETWORK CABINET

A-A section

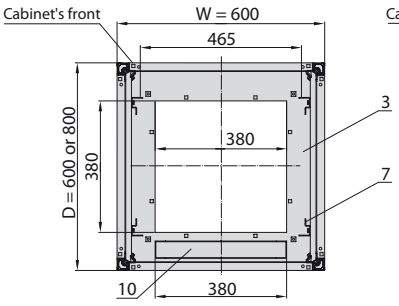

B-B section

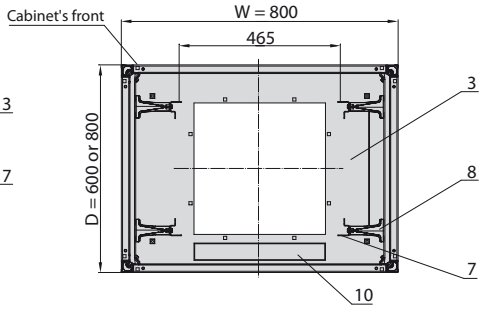

DESIGN

1. Frame's post
2. Frame's bottom plate
3. Frame's top plate
4. Roof
5. Base (plinth, adjustable feet or castors)
6. C-profile
7. Mounting profile
8. Outrigger
9. Earthing bar
10. Knock-out blanking plate

Maximum door opening angle: 110°

Front view
(600 mm wide cabinet)

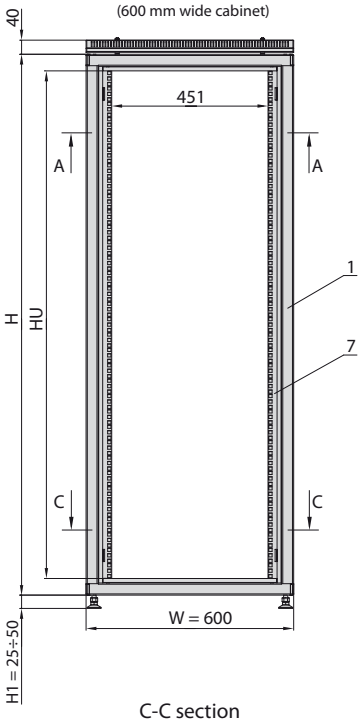

Front view
(800 mm wide cabinet)

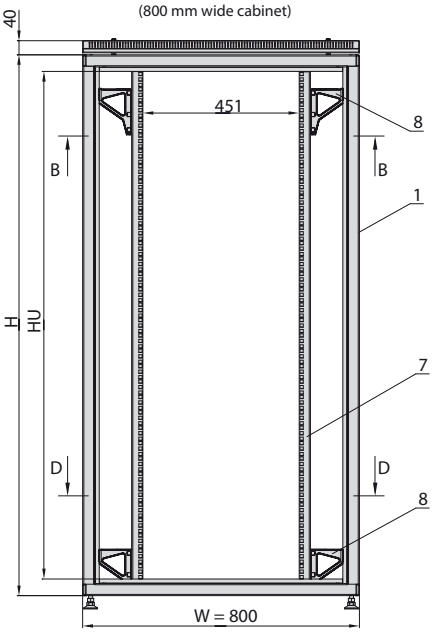

Side view

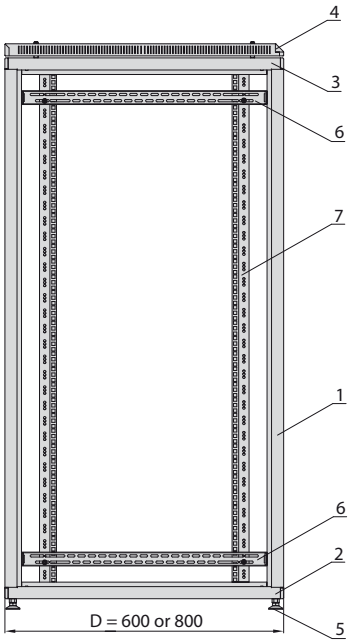

C-C section

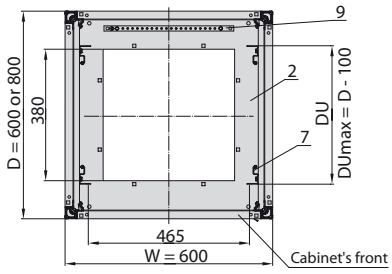

D-D section

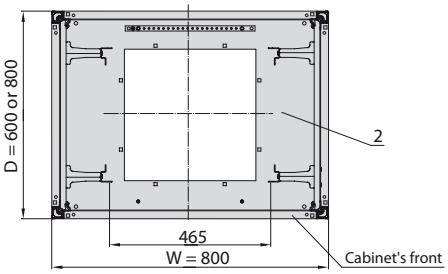

19" mounting profile

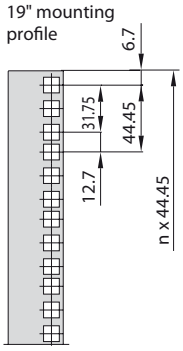

HEIGHT OF BASE H1

Feet: from 25 to 50 mm
Plinth: 100 or 200 mm
Castors, type 150: 108 mm
Castors, type 300: 129 mm

Notes:

- The cabinet in the drawing is shown without any panels or doors.
- Cable opening in the top plate of the cabinet is covered with a knock-out blanking plate (12).
  The same solution can be found in the roof of the cabinet (see the picture of a standard roof on page 48).
  Blanking plates for openings in the top and bottom plate - see pages 125.

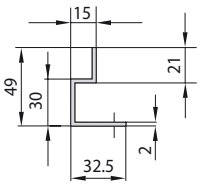

NETWORK CABINET SZB 19"

REFERENCE CHART

Total width W [mm]	Total depth D [mm]	Reference number							
800	800	**5**	**17**	**53**	**149**	**153**	**89**	**101**	**113**
	600	**6**	**18**	**54**	**150**	**154**	**90**	**102**	**114**
600	800	**9**	**21**	**57**	**151**	**155**	**93**	**105**	**117**
	600	**10**	**22**	**58**	**152**	**156**	**94**	**106**	**118**
Usable height HU [U = 44.45 mm]		45 U	42 U	36 U	33 U	30 U	24 U	18 U	15 U
Frame height H [mm]		2096	1963	1696	1563	1430	1163	896	763

Note:
- Cabinet options in the **green** shaded fields are available in constant supply from ZPAS S.A.'s warehouse (this refers to cabinets with the following configuration: frame, four adjustable mounting profiles, two side panels, front glass door, lockable steel rear door shortened with 3 U module panel with brush strip, standard roof with perforation, four levelling feet, earthing bar and earthing cables for the doors and side panels - cat. no. WZ-SZB-xxx-17AA-11-0000-011)..
- Lead time of other cabinets to be agreed upon with ZPAS Sales Department.

CATALOGUE NUMBER OF SZB CABINET

WZ-SZB - XXX - XXXX - XX - XXXX - 011

(XXXX: F | R | LS | RS; XXXX: F | R | LS | RS)

Reference number
specifies the cabinet's overall dimensions (see reference chart). Zeros should be added before single-digit or double-digit numbers.

| **F** - FRONT | **R** - REAR | **LS** - LEFT SIDE | **RS** - RIGHT SIDE |

Door or panel type:
0 - without door or without panel
1 - glass door with single-point locks
2 - solid steel door with single-point locks
7 - solid steel, shortened door with single-point locks + 1 piece of 3 U module panel with brush strip, mounted under the shortened door
G - steel door with glass and three-point rod-latch lock with swing handle*
H - solid steel door with three-point rod-latch lock with swing handle*
I - perforated steel door (type A) with single-point locks
L - perforated steel door (type A) with three-point rod-latch lock with swing handle*
(LL) - perforated double-wing steel door (type A) with three-point rod-latch lock with swing handle*
P - perforated steel door (type C) with single-point locks**
S - perforated steel door (type C) with three-point rod-latch lock with swing handle**
Z - glass door with metal sides and three-point rod-latch lock with swing handle*
A - solid steel panel with single-point locks
U - perforated steel panel (type A) with single-point locks
Y - perforated steel panel (type C) with single-point locks**

*) Only as a front or rear door for cabinets higher than 18 U
**) Only for 42 and 45 U cabinets

Perforation types (A, C) - see page 47

Roof type:
0 - without roof
1 - standard roof
2 - roof with extra perforation
3 - tight roof IP 41
4 - roof with opening for blanking/cable entry plate

For a detailed description of roof types, go to page 48.

| **F** - FRONT | **R** - REAR | **LS** - LEFT SIDE | **RS** - RIGHT SIDE |

Configuration of plinth's sides:
Four digits which specify plinth side type.
Four zeros (0000) should be entered for cabinet without any plinth.

Each side can be:
1 - solid
2 - with perforation
3 - with double perforation*
4 - with a brush opening
5 - with two brush openings*
6 - with a brush opening and perforation*

*) Only for plinths 200 mm in height.

For a detailed descriptions of plinths, see pages 104-105.

Base type:
0 - without any base (cabinet set directly on bottom plate)
1 - levelling feet
2 - castors - type 150 (see page 106)
3 - castors - type 300 (see page 107)
4 - plinth 100 mm
5 - plinth 100 mm with levelling option
6 - plinth 200 mm
7 - plinth 200 mm with levelling option

Examples:
- The cat. no. **WZ-SZB-018-1AAA-14-2422-011** means SZB cabinet, usable height 42 U, width 800 mm, depth 600 mm. The cabinet is equipped with front glass door, two removable side panels and removable rear panel. The top is covered with the standard roof. Cabinet is situated on 100 mm plinth. Rear side of the plinth with brush opening for cable entry, all other sides are perforated. Doors, panels and roof are earthed. Cabinet interior is equipped with four mounting profiles installed to the frame by means of 8 outriggers.
- The cat. no. **WZ-SZB-022-(LL)(LL)AA-11-0000-011** means SZB cabinet, usable height 42 U, width and depth 600 mm. The cabinet is equipped with perforated double-wing front door, perforated double-wing rear door and two solid side panels. The top is covered with the standard roof. Cabinet is set on levelling feet.

Note:
The delivery of a standard SZB cabinet (except for elements listed in cat. no.) includes the following: four mounting profiles, earthing bar and earthing cables for doors and panels.

SZB 19" NETWORK CABINET

DOOR TYPES

[1] Glass door with single-point locks

[2] Solid steel door with single-point locks

[G] Steel door with glass and three-point rod-latch lock with swing handle

[H] Solid steel door with three-point rod-latch lock with swing handle

[I] Perforated steel door (type A) with single-point locks

[L] Perforated steel door (type A) with three-point rod-latch lock with swing handle

Note:
Symbols given in square parentheses [ ] refer to diagrams on page 45 - Door and panel types.

NETWORK CABINET SZB 19"

DOOR TYPES

[P] Perforated steel door (type C) with single-point locks

[S] Perforated steel door (type C) with three-point rod-latch lock with swing handle

[7] Solid steel, shortened door with single-point locks + 1 piece of 3 U module panel with brush strip, mounted under the shortened door

[LL] Perforated double-wing steel door (type A) with three-point rod-latch lock with swing handle

[Z] Glass door with metal sides and three-point rod-latch lock with swing handle

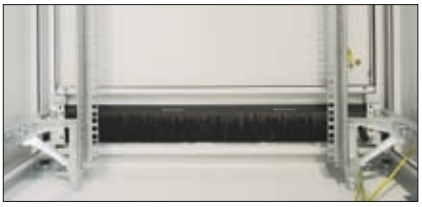

3 U module panel mounted in 800 mm wide cabinet

Perforation types for doors and panels

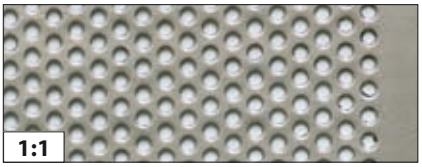

Perforation type A
clearance 30%

Perforation type C
clearance 80%

Note:
Symbols given in square parentheses [ ] refer to diagrams on page 45 - Door and panel types.

SZB 19" NETWORK CABINET

ROOF TYPES

[1] tandard roof. After removal of the knock-out blanking plate from the roof, the cable opening can be completed with brush strip - see pages 125)

[2] Roof with extra perforation (top)

[3] Tight roof with IP 41 protection

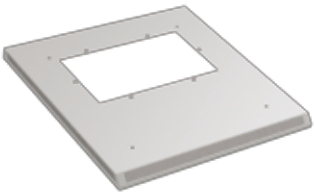

[4] Roof with opening 380x210 mm for blanking/cable entry plate 420x250 mm (blanking/cable entry plate should be ordered separately - see page 125)

Note:
Numbers given in square parentheses [ ] refer to diagrams on page 45 - Roof types.

SZB 19" NETWORK CABINET

SIDE PANEL TYPES

[A] Solid steel panel with single-point locks

[U] Perforated steel panel (type A) with single-point locks

[Y] Perforated steel panel (type C) with single-point locks

Note:
Symbols given in square parentheses [ ] refer to diagrams on page 45 - Door and panel types.

NETWORK CABINET SZB 19"

EXAMPLES OF NON-STANDARD SZB CABINETS

SZB cabinet with easy regulation of 19" mounting profiles

SZB cabinet 1000 mm wide, double-sectioned. Left section equipped with 19" mounting profiles. Right section with mounting angles in 300 mm spacing.

SZB cabinet 600 mm wide with double-wing door with perforation type B (clearance 69%)

Double-section SZB cabinet with air conditioner

SZB SE 19" SERVER CABINET

Cabinet SZB SE 42 U, 600x1000 mm, colour: RAL 7035, set on levelling feet, door with perforation type C, two pairs of mounting profiles in 19" spacing.
Catalogue no.
WZ-SZBSE-006-5711-11-0000-2-011

OFFERS PROTECTION OF INSTALLED EQUIPMENT IN SERVER ROOMS

- Offered in 24 different overall dimensions, including 2 types immediately available from the ZPAS S.A. warehouse.
- Expanded configuration system:
  - multiple door, panel, roof options for maximum flexibility,
  - possibility to join cabinets in a row,
  - possibility of optional cable entry,
  - easy coding system enables quick configuration of the cabinet.
- Possibility of controlling ventilating air flow by application of proper type of doors, side panels and fan units.
- Wide range of supplementary accessories: shelves, drawers, fan units, power strips, blanking plates etc.
- Non-standard cabinets are available on individual customer's request.

TECHNICAL DATA

Material:
Frame, side panels, doors, roof, mounting profiles, C-profiles - sheet steel
Outriggers - zamak casting.

Protection degree:
IP 20 in accordance with EN 60529 (does not apply to brush cable entries).

Surface finishing:
Frame, roof, panels, doors
- powder paint, light grey (RAL 7035) or black (RAL 9005).
All other colour options on request.

Mounting profiles, C-profiles - Al-Zn coated.

Maximum load capacity:
See chart on page 51.

SCOPE OF DELIVERY

- cabinet frame,
- perforated front and rear steel door (perforation type C - see page 52), with three-point rod-latch lock with swing handle,
- two side panels made of unperforated steel sheets,
- standard roof (with 1 or 3 cable openings covered with knock-out blanking plates): 600 mm cabinets – 1 opening, 800 mm cabinets – 3 openings; for details, go to page 52),
- two pairs of mounting profiles, spaced at 19",
- earthing strip and cables,
- levelling feet.

The cabinets immediately available from the manufacturer's warehouse – see page 51.
For other cabinet versions, see page 53

SERVER CABINET SZB SE 19"

Cabinets immediately available from the manufacturer's warehouse

Cabinet SZB SE 42 U, 800x1000 mm, colour: RAL 9005, set on levelling feet, door with perforation type C, two pairs of mounting profiles in 19" spacing
Catalogue no.
WZ-SZBSE-005-5711-11-0000-2-161

REFERENCE CHART

Height [U = 44.45 mm]	Width [mm]	Depth [mm]	Catalogue number	
			Cabinet finished in RAL 7035	Cabinet finished in RAL 9005
42 U	800	1000	WZ-SZBSE-005-5711-11-0000-2-011	WZ-SZBSE-005-5711-11-0000-2-161
	600	1000	WZ-SZBSE-006-5711-11-0000-2-011	WZ-SZBSE-006-5711-11-0000-2-161

Note

The table above lists selected cabinet versions only, which are immediately available from the warehouse.
When ordering cabinets with different overall dimensions or a different configuration of components (items available on demand), please use the coding system provided on page 53.

INSTRUCTIONS FOR ORDERING SZB SE 19" CABINETS

1. When ordering a SZB SE cabinet, please provide the appropriate **catalogue number according to the above chart or configuration system on page 53** which specifies overall dimensions of the cabinet, types of doors, panels, roof and base, the layout of mounting profiles or angles, and the colour.
2. The next step is to specify **catalogue numbers of supplementary accessories** (such as shelves, blanking plates, power strips, fan units etc.). Supplementary accessories are delivered in separate packaging together with fixing hardware.

MAXIMUM LOAD CAPACITY FOR SZB SE CABINETS

Base type	Maximum weight of equipment mounted in cabinet
levelling feet	1360 kg*
castors - type 300	500 kg
plinth	1360 kg*

*) Declared carrying capacity is valid if maintaining the maximum distance between mounting profiles within the cabinet. If the cabinet is set on feet, for ensuring carrying capacity you must also tighten jam nuts to the bottom plate.

SZB SE 19" SERVER CABINET

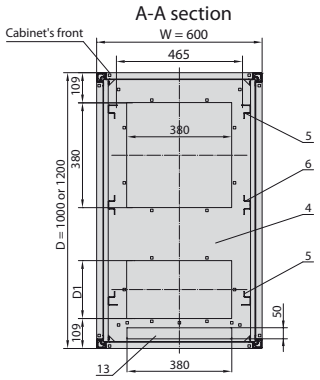

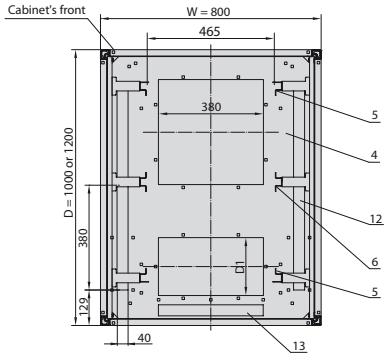

DESIGN

1. Frame's post
2. Frame's middle post (only for cabinets 1200 mm in depth)
3. Frame's bottom plate
4. Frame's top plate
5. Mounting profile
6. Middle mounting profile
7. Outrigger
8. Plinth
9. Roof
10. Earthing strip
11. C-profile
12. Knock-out side blanking plate
13. Knock-out rear blanking plate

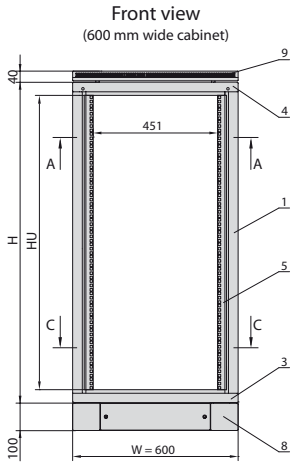

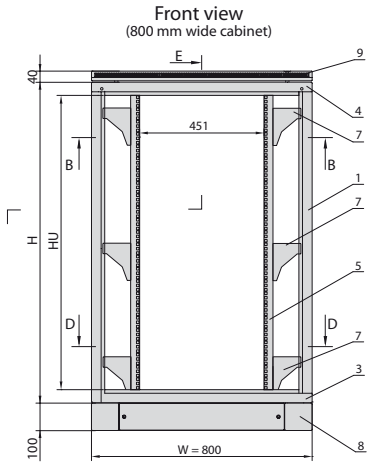

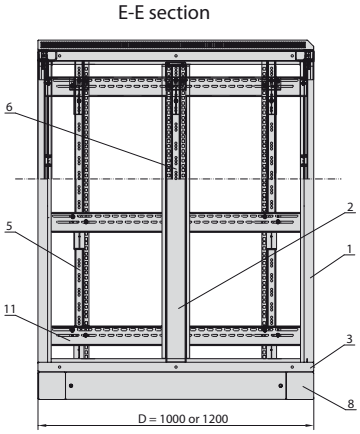

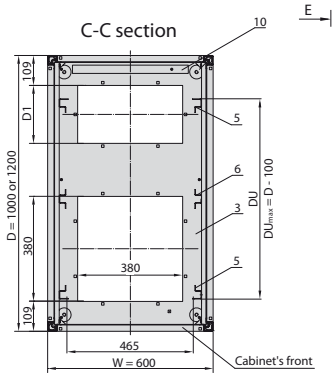

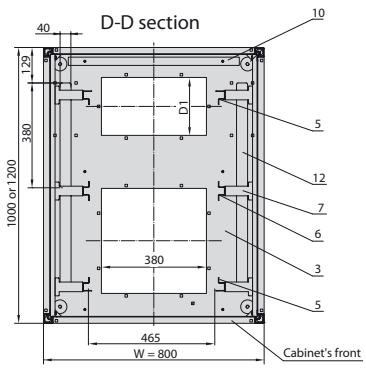

Dimensions [mm]	
D	D1
1000	210
1200	380

HEIGHT OF BASE H1

Feet: from 25 to 50 mm
Plinth: 100 or 200 mm
Castors, type 300: 129 mm

Notes:

- The cabinet in the drawing is shown without any panels or doors.
- A wide range of blanking and cable entry plates can be matched with openings in the top and bottom plates and – optionally – in the roof of a cabinet. The 380x40 and 380x50 mm openings are blinded with knock-out blanking plates as a standard.
- 1200 mm deep cabinets have additional frame's middle posts (item 2)

PERFORATION TYPES FOR DOORS AND PANELS

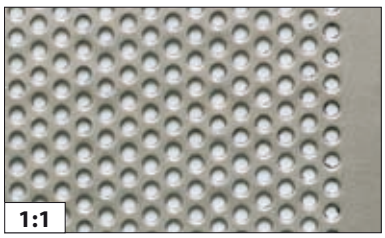

Perforation type A
clearance 30%

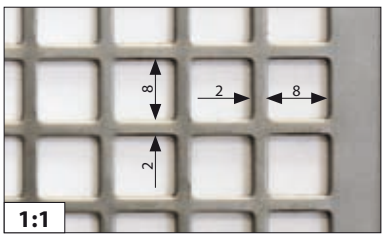

Perforation type B
clearance 69%

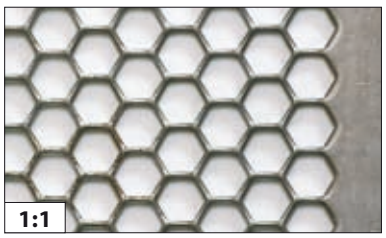

Perforation type C
clearance 80%

SERVER CABINET SZB SE 19"

REFERENCE CHART

Width W [mm]	Depth D [mm]	Reference number					
800	1000	**1**	**3**	**5**	**9**	**11**	**13**
	1200	**21**	**23**	**25**	**29**	**31**	**33**
600	1000	**2**	**4**	**6**	**10**	**12**	**14**
	1200	**22**	**24**	**26**	**30**	**32**	**34**
Usable height HU [U = 44.45 mm]		47 U	45 U	42 U	36 U	33 U	24 U
Frame height H [mm]		2186	2096	1963	1696	1563	1163

Note: Cabinet versions marked in **green** are immediately available from the manufacturer's warehouse – see page 51

CATALOGUE NUMBER OF SZB SE CABINET

WZ-SZBSE - XXX - XXXX - XX - XXXX - X - XXX

(XXXX: LS | RS; XXXX: F | R | LS | RS)

Reference number
specifies the cabinet's overall dimensions (see reference chart).
Zeroes shall be added before single-digit or double-digit numbers.

Front door types:
0 - without door
1 - solid steel door
2 - steel door with perforation type A
3 - glass door
4 - glass door with perforated metal sides, rod-lath lock and swing handle
5 - steel door with perforation type C, equipped with rod-lath lock and swing handle (the door is available only for the following cabinets: 42, 45 and 47 U)
6 - steel door with perforation type B, equipped with rod-lath lock and swing handle

Rear door or panel types:
0 - without door or without panel
1 - solid steel door
2 - solid steel door, shortened, with one 3 U module panel*
3 - solid steel door, shortened, with two 3 U module panels*
4 - steel door with perforation type A
5 - steel door with perforation type A, shortened, with one 3 U module panel*
6 - steel door with perforation type A, shortened, with two 3 U module panels*
7 - steel door with perforation type C, equipped with rod-lath lock and swing handle (the door is available only for the following cabinets: 42, 45 and 47 U)
8 - steel door with perforation type C, shortened, with one 3 U* module panel, equipped with rod-lath lock and swing handle (the door is available only for 45 U cabinets)
I - steel door with perforation type B, equipped with rod-lath lock and swing handle
A - solid steel panel
B - solid steel panel, shortened, with one 3 U module panel*
C - solid steel panel, shortened, with two 3 U module panels*
D - steel panel with perforation type A
E - steel panel with perforation type A, shortened, with one 3 U module panel*
F - steel panel with perforation type A, shortened, with two 3 U module panels*
G - steel panel with perforation type C (the door is available only for the following cabinets: 42, 45 and 47 U)
H - steel panel with perforation type C, shortened, with one 3 U module panel* (the panel is available only for 45 U cabinets)
J - steel panel with perforation type B
*) 3 U module panel with a brush strip

Cabinet's colour:
011 - RAL 7035 161 - RAL 9005

Layout of mounting profiles or mounting angles inside the cabinet:
1 - two pairs of 19" mounting profiles and one pair of middle mounting profiles
2 - two pairs of 19" mounting profiles
3 - two pairs of 19" mounting angles

| **F** - FRONT | **R** - REAR | **LS** - LEFT SIDE | **RS** - RIGHT SIDE |

Configuration of plinth sides
Four digits which specify plinth side type.
Four zeros (0000) should be entered for cabinets without a plinth.

Each side can be:
1 - solid
2 - with perforation
3 - with double perforation*
4 - with a brush opening
5 - with two brush openings*
6 - with a brush opening and perforation*
7 - with a pull out stabiliser**

*) Only for plinths 200 mm in height.
**) Only as a front side for 100 mm plinths.

For a detailed description of plinths, see pages 104-105.

Base types:
0 - without any base
1 - levelling feet
2 - castors, type 300 (see page 107)
3 - plinth, 100 mm high
4 - plinth, 200 mm high
5 - plinth, 100 mm high with levelling option
6 - plinth, 200 mm high with levelling option

Roof types:
1 - standard roof
2 - roof with openings for blanking or cable entry plates

For a detailed description of roofs, see page 124

| **LS** - LEFT SIDE | **RS** - RIGHT SIDE |

Side panel types:
0 - without any panel
1 - solid steel panel
2 - perforated steel panel (type A)

Notes:
• The delivery of standard SZB SE cabinets (except for elements listed in the catalogue no.) includes an earthing strip and earthing cables for doors and side panels.
• Blanking and cable entry plates for the top plate, bottom plate and roof, as well as other elements of supplementary accessories, must be ordered separately.

SZB SE 19" SERVER CABINET

EXAMPLES OF SZB SE CABINETS

Cabinets with door and panels with perforation type A

SERVER CABINET SZB SE 19"

EXAMPLES OF SZB SE CABINETS

Cabinet with door with perforation type C, without side panels

Cabinet with glass door

Cabinet with glass front door with perforated metal sides, rod-lath lock and swing handle

Server cabinets with tailor made doors

OTS 1 19" NETWORK/SERVER CABINET

OTS1 cabinet 42 U, 800 x 800 mm with glass front door and steel rear, shortened door with 3 U module panel with a brush strip

CABINET FOR ON-SITE ASSEMBLY

- Designed for indoor applications.
- Offered in 10 different overall dimensions immediately available from the ZPAS warehouse: heights 24U, 42U; wides 600, 800 mm; depths 600, 800, 1000 mm.
- The OTS1 cabinet is assembled from same parts as the SZB and SZB SE cabinets.
- Delivered disassembled, assembly manual included.
- Quick configuration enhanced by easy coding system (see page 59).
- When using additional C-profiles, cabinet load capacity is 1350 kg.

SCOPE OF DELIVERY

- screwed frame (bottom plate, top plate, 4 posts, 4 C-profiles),
- glass front door, steel front door with perforation or no front door (dependant on configuration),
- 2 solid steel side panels or no side panels (dependant on configuration),
- steel rear, shortened door, steel rear door with perforation or no rear door (dependant on configuration),
- 3 U module panel with a brush strip, for assembly under or above the shortened rear door (only where shortened rear door included),
- standard roof (with cable opening in the rear, the opening covered with a knock-out blanking plate; cabinet roof 800 x 1000 mm have additional two side cable entries),
- 2 pairs of mounting profiles in 19" spacing,
- 8 outriggers for mounting profiles fixing (only in 800 mm wide cabinets),
- earthing bar,
- earthing cables for the steel door and side panels (dependant on configuration),
- 4 levelling feet,
- assembly manual,
- cardboard packaging.

Additional C-profiles and ootriggers - see pages 117, 118

TECHNICAL DATA

Additional, middle mounting profiles - see page117

Material:
Frame, side panels, steel door, roof, mounting profiles, C-profiles - sheet steel
Glass door - safety glass
Outriggers - zamak casting

Protection degree:
IP 20 in accordance with EN 60529 (does not apply to brush cable entry).

Surface finishing:
Frame, roof, side panels, steel door - powder paint, light grey (RAL 7035) or black (RAL 9005). All other colour options on request.

Mounting profiles, C-profiles - Al-Zn coated

Maximum load capacity:
see chart on page 59

OTS1 cabinet, flat packed

NETWORK/SERVER CABINET OTS 1 19"

OTS1 cabinet 24 U, 600 x 800 mm with glass front door and steel rear, shortened door with 3 U module panel with a brush strip

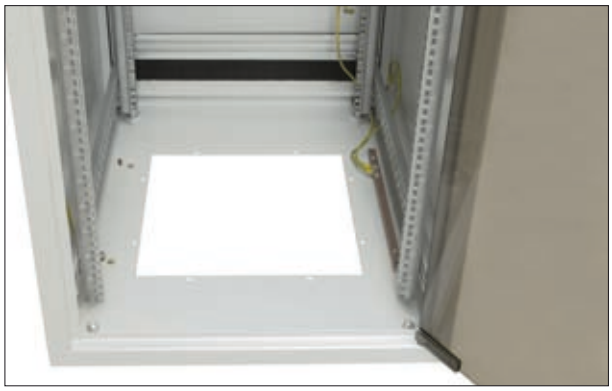

OTS1 cabinet 42 U, 800 x 1000 mm with perforated steel doors and three-point rod-latch locks with swing handle
Note: in the middle of the height we can find additional C-profiles as also outriggers, that should be ordered separately (see pages 117, 118.
Load capacity of the cabinet equipped with additional C-profiles is 1350 kg.

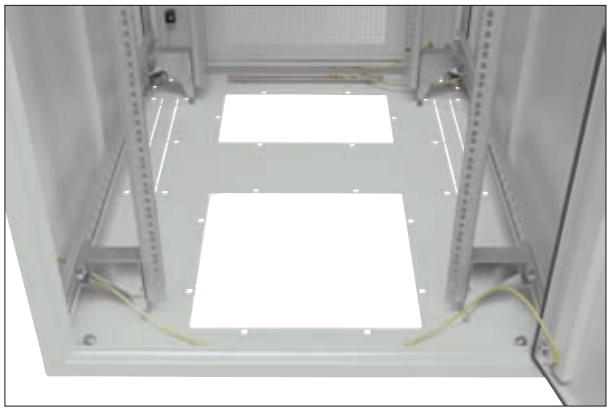

OTS 1 19" NETWORK/SERVER CABINET

A-A section
(1000 mm deep cabinet)

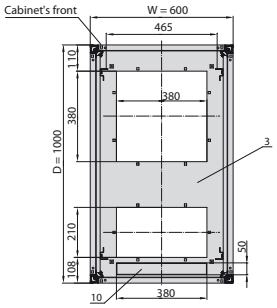

B-B section
(1000 mm deep cabinet)

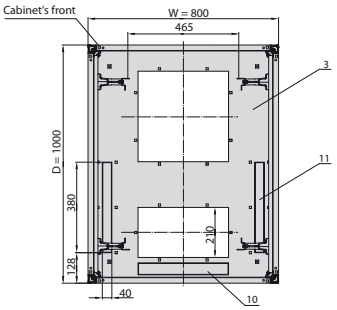

A-A section
(600 or 800 mm deep cabinet)

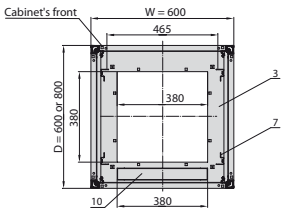

B-B section
(600 or 800 mm deep cabinet)

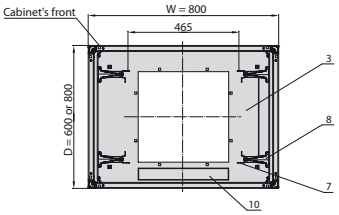

DESIGN

1. Frame's post
2. Frame's bottom plate
3. Frame's top plate
4. Roof
5. Adjustable feet
6. C-profile
7. Mounting profile
8. Outrigger
9. Earthing strip
10. Knock-out rear blanking plate
11. Knock-out side blanking plate

Note:
The cabinet in the drawing is shown without any panels or doors.

Front view
(600 mm wide cabinet)

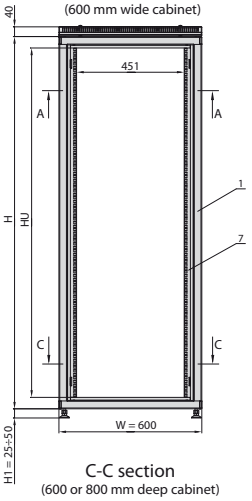

Front view
(800 mm wide cabinet)

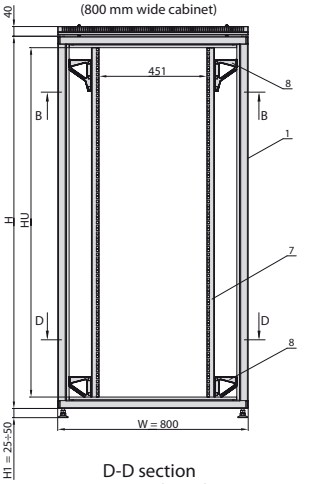

Side view

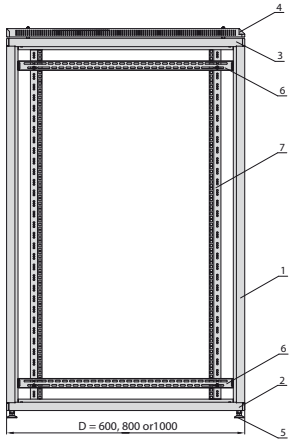

C-C section
(600 or 800 mm deep cabinet)

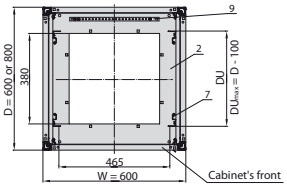

D-D section
(600 or 800 mm deep cabinet)

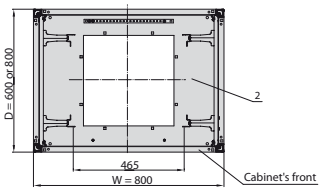

C-C section
(1000 mm deep cabinet)

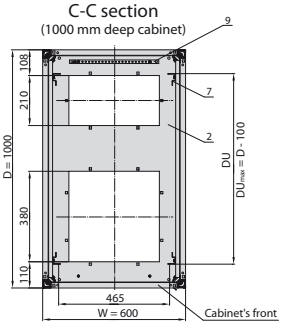

D-D section
(1000 mm deep cabinet)

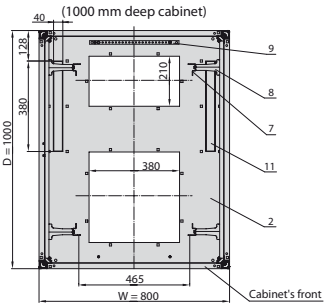

PERFORATION USED IN THE DOORS

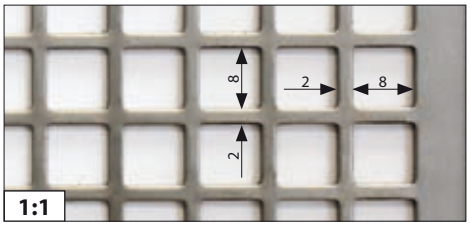

Perforation type B
clearance 69%

NETWORK/SERVER CABINET OTS 1 19"

REFERENCE CHART

Total width W [mm]	Total depth D [mm]	Reference number	
800	1000	**7**	**31**
	800	**8**	-
	600	**9**	-
600	1000	**10**	**34**
	800	**11**	**35**
	600	**12**	**36**
Usable height HU [U = 44.45 mm]		42 U	24 U
Frame height H [mm]		1963	1163

CATALOGUE NUMBER OF OTS1 CABINET

WZ-OTS1 - XXX - XXXX - 11 - 0000 - XXX

Reference number
specifies the cabinet's overall dimensions (see reference chart).
Zeros should be added before single-digit or double-digit numbers.

front door type:
0 - without front door
1 - glass door
6 - perforated steel door (type B) with three-point rod-latch lock with swing handle

Rear door type:
0 - without rear door
6 - perforated steel door (type B) with three-point rod-latch lock with swing handle
7 - solid steel, shortened door + 3 U module panel with brush strip

Cabinet's colour:
011 - RAL 7035 (light grey) 161 - RAL 9005 (black)

side panels type:
00 - without side panels AA - solid steel side panels

INSTRUCTIONS FOR ORDERING OTS1 CABINET

1. When ordering the OTS1 cabinet, please provide the appropriate **catalogue number according to the above information**.
2. The next step is to specify catalogue numbers of supplementary accessories (such as: plinth, castors, middle mounting profiles, shelves, blanking plates, power strips, fan units etc.). Supplementary accessories are delivered in separate packaging including fixing hardware.

MAXIMUM LOAD CAPACITY FOR OTS1 CABINETS

Base type	Maximum weight of equipment mounted in cabinet
levelling feet	1000 / 1360** kg
castors, type 150*	150 kg
castors, type 300*	500 kg
plinth*	1000 / 1360** kg

*) Supplementary accessories

**) For loads from 1000 to 1360 kg, the cabinet must be retrofitted with an additional pair of C-profiles (page 117). Another condition for ensuring declared carrying capacity, applicable also for loads up to 1000 kg, is to maintain maximum distance between mounting profiles within the cabinet, and for feet, tighten jam nuts to the bottom plate.

SZB DO MANAGEMENT CABINET SYSTEM

SZB DO management cabinets have been designed to increase space in server cabinets. Using the system, an extra space of 300-600 mm can be obtained within a server cabinet to allow room for installation of non-standard sized or additional equipment (e.g. power strips, ducts or holders mounted to the dedicated mounting plate). Our range of products includes a system of management cabinets installed between server cabinets arranged in rows or installed in front of or behind a server cabinet.

MANAGEMENT CABINET INTALLED BETWEEN SERVER CABINETS OR NEXT TO SERVER CABINET

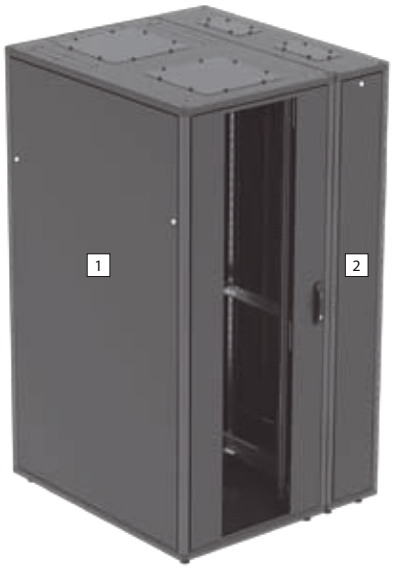

1 - server cabinet, **2** - management cabinet

- Fixed to cabinet's side wall.
- Fitted with a set of C-profiles for installation of accessories.
- Bottom and top plates provided with cable entries.
- Complete front and rear panel provided with single-point locks.
- Lack of side panels; management cabinet fully compatible with ZPAS server cabinets; available server cabinet side panels.

TECHNICAL DATA

Material:
Sheet steel

Protection degree:
IP 20 in accordance with EN 60529
(applies to the management cabinet installed between server cabinets or equipped with side panels).

Surface finishing:
Frame, front and rear panel - powder paint, light grey (RAL 7035) or black (RAL 9005).
All other colour options on request.
C-profiles - Al-Zn coated.

CATALOGUE NUMBER OF SZB DO CABINET

WZ-SZBDO - XXX - AA00 - XX - XXXX - XXX

(AA00: LS | RS; XXXX: F | R | LS | RS)

Reference number
specifies the cabinet's overall dimensions (see reference chart)
Zeroes shall be added before single-digit or double-digit numbers.

Front panel type:
A - solid steel panel

Rear panel type:
A - solid steel panel

| **LS** - LEFT SIDE | **RS** - RIGHT SIDE |

Side panel types:
0 - without any panel

Roof types:
0 - without any roof
1 - standard roof
2 - roof with openings for blanking or cable entry plates

For a detailed description of roof types, go to pages 48.

Cabinet's colours:
011 - RAL 7035 (light grey) 161 - RAL 9005 (black)

| **F** - FRONT | **R** - REAR | **LS** - LEFT SIDE | **RS** - RIGHT SIDE |

Configuration of plinth sides
Four digits which specify plinth side type.
Four zeros (0000) should be entered for cabinets without a plinth.

Each side can be:
1 - solid
4 - with a brush opening*

*) to be installed only on the left or right side of the plinth

Base types:
0 - without any base
1 - levelling feet
3 - plinth, 100 mm high

MANAGEMENT CABINET SYSTEM SZB DO

REFERENCE CHART

Width W [mm]	Depth D [mm]	Reference number		
300	1000	**1**	**3**	**5**
	1200	**2**	**4**	**6**
Usable height [U = 44.45 mm]		47 U	45 U	42 U
Frame height H [mm]		2186	2096	1963

Front view

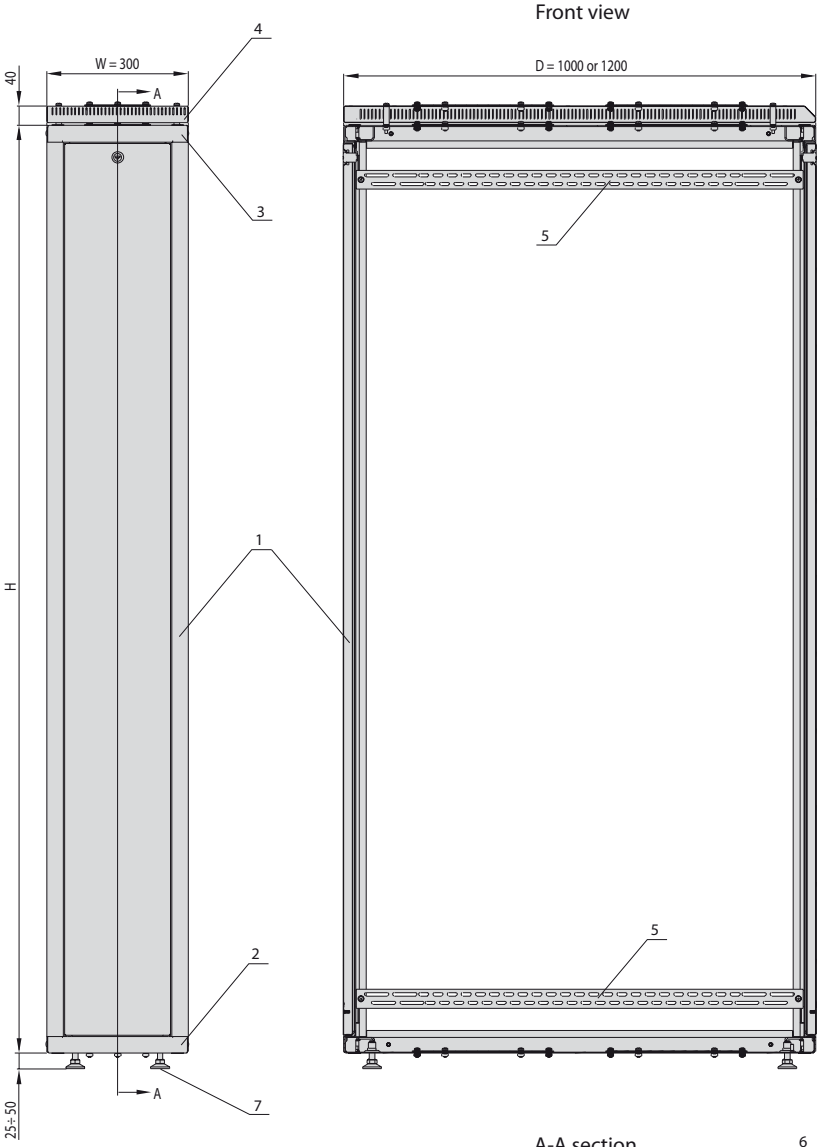

A-A section

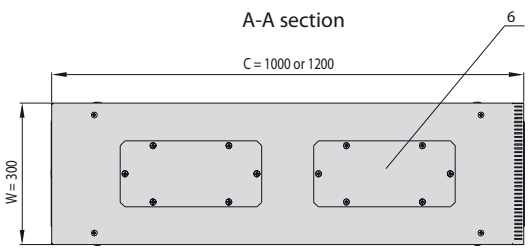

Note:
In the top and bottom plate, there are blanked cable openings identical to those in the roof.

DESIGN

1. Frame's post
2. Frame's bottom plate
3. Frame's top plate
4. Roof
5. C-profile
6. Blanking plate
7. Levelling feet

SZB DO MANAGEMENT CABINET SYSTEM

MANAGEMENT CABINET INSTALLED IN FRONT OF OR BEHIND SERVER CABINET

1 - server cabinet, **2** - management cabinet

- Allows to extended depth of the server cabinet from 300 mm to 600 mm.
- Set of C-profiles for installing 19" mounting profiles, power strips, cable trays or other equipment.
- Bottom and top plates provided with cable entries.
- Solid side panels provided with single-point locks.
- Lack of front and rear doors; management cabinet fully compatible with ZPAS server cabinets; possible use of server cabinet front or rear door.

TECHNICAL DATA

Material:
Sheet steel

Protection degree:
IP 20 in accordance with EN 60529
(applies to the management cabinet combined with the server cabinet and equipped with door).

Surface finishing:
Frame, side panels - powder paint, light grey (RAL 7035) or black (RAL 9005).
All other colour options on request.
C-profiles - Al-Zn coated.

CATALOGUE NUMBER OF SZB DO CABINET

WZ-SZBDO - XXX - 0011 - XX - XXXX - XXX

(LB | PB) (P | T | LB | PB)

Reference number
specifies the cabinet's overall dimensions (see reference chart)
Zeroes shall be added before single-digit or double-digit numbers.

Front door type:
0 - without any door

Rear door type:
0 - without any door

| **LS** - LEFT SIDE | **RS** - RIGHT SIDE |

Side panel types:
1 - solid steel panel

Roof types:
0 - without any roof
1 - standard roof
2 - roof with openings for blanking or cable entry plates
For a detailed description of roof types, go to pages 48.

Cabinet's colours:
011 - RAL 7035 (light grey) 161 - RAL 9005 (black)

| **F** - FRONT | **R** - REAR | **LS** - LEFT SIDE | **RS** - RIGHT SIDE |

Configuration of plinth sides
Four digits which specify plinth side type.
Four zeros (0000) should be entered for cabinets without a plinth.

Each side can be:
1 - solid
4 - with a brush opening*

*) to be installed only at the front or back of the plinth

Base types:
0 - without any base 3 - plinth, 100 mm high
1 - levelling feet

Note:
In case of management cabinets installed at the front or back of the server cabinet, the cabinets are delivered without the front/back door; server cabinet's front or back door can be mounted instead.

MANAGEMENT CABINET SYSTEM SZB DO

REFERENCE CHART

Width W [mm]	Depth D [mm]	Reference number		
600	300	**7**	**9**	**11**
800		**8**	**10**	**12**
Usable height [U = 44.45 mm]		47 U	45 U	42 U
Frame height H [mm]		2186	2096	1963

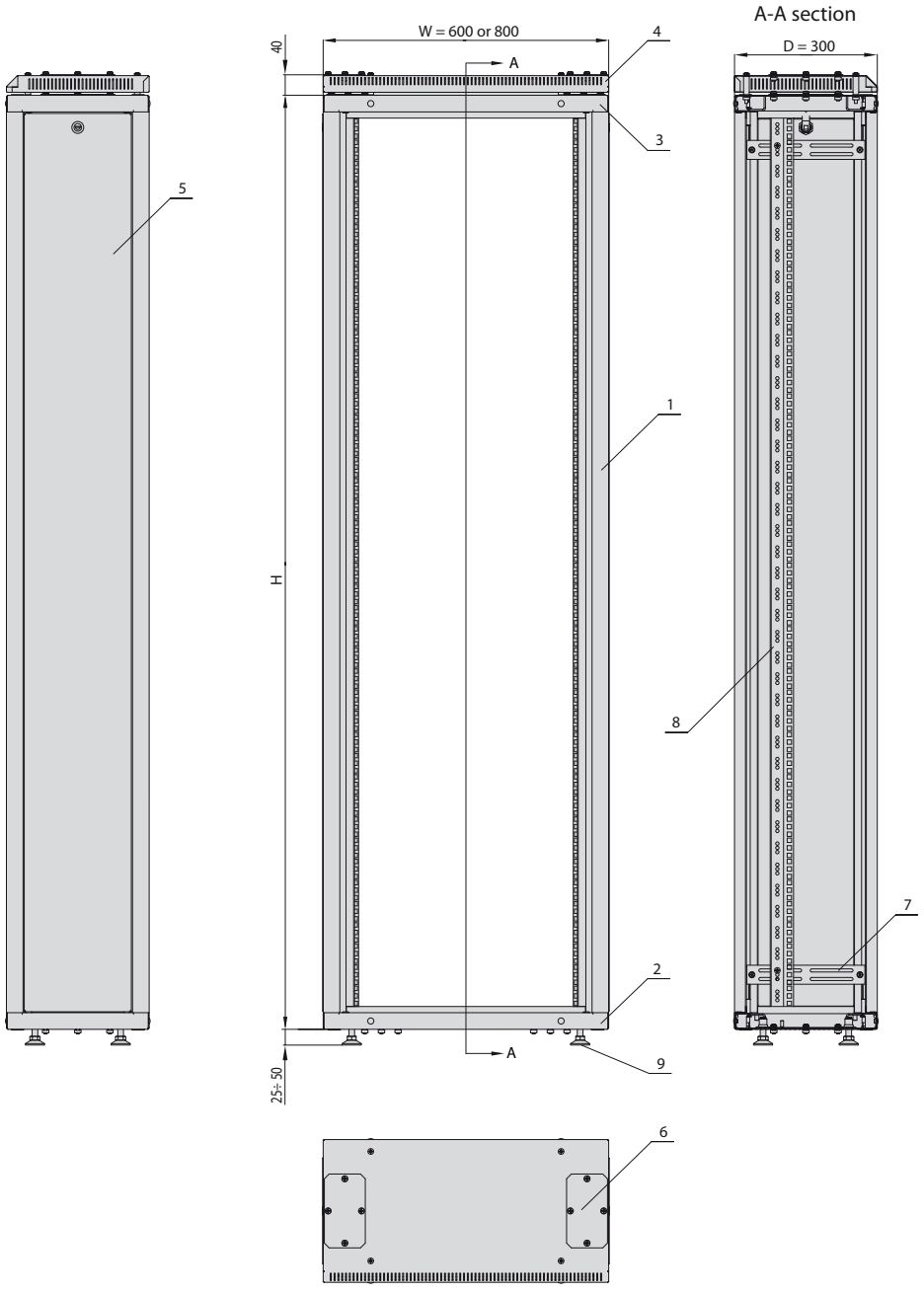

Notes:
- In the top and bottom plate, there are blanked cable openings identical to those in the roof.
- Mounting profiles are additional accessories, to be ordered separately.

DESIGN

1. Frame's post
2. Frame's bottom plate
3. Frame's top plate
4. Roof
5. Side panel
6. C-profile
7. Blanking plate
8. Mounting profile (ordered separately)
9. Levelling feet

DSR 19" COLOCATION CABINET

DSR cabinets bayed together

ALLOWS FOR PLACING MULTIPLE INDEPENDENT SERVERS IN ONE CABINET

MAIN FEATURES

- Front and rear door made of perforated sheet steel, offered in 3 standard heights of 47 U, 23 U, 11 U. The rear of the cabinet can be also fitted with perforated sheet.
- Colocation cabinets come with steel perforated side panels, these side panels can double up as cabinet dividers when cabinets are bayed together.
- Doors and panels are fitted with standard single point locks; multiple point locks can be applied on request.
- Individual compartments are separated with horizontal dividers that are fixed directly to the frame. Each compartment has its own set of 19" mounting profiles and split cable ducts. These ducts are on both sides of the cabinet. Cable entry points are possible from either the top or bottom of the cabinet.
- Both top and bottom plate have 380x210 mm opening that might be used either for a fan unit or cable entry. These access points can be covered using various blanking plates. Additionally there are 2 slim, side cable openings. For top cable leading it is necessary to use roof with cable openings instead of the solid roof.

Colocation cabinets are typically used for indoor applications. They are specially designed to protect equipment installed inside and provide it with appropriate ventilation. There is one standard overall dimension with 6 different combination options for the colocation cabinets.

When designing DSR cabinets, ZPAS applied unique design principles normally found in tailor made cabinets with ventilation systems.

TECHNICAL DATA

Material:
Sheet steel

Protection degree:
IP 20 in accordance with EN 60529

Surface finishing:
Frame, roof, panels, doors, plinth - powder paint, light grey (RAL 7035).
All other colour options on request.

Mounting profiles and cable ducts - Al-Zn coated.

Maximum load capacity:
The maximum weight of equipment mounted in DSR cabinets is 600 kg.

SCOPE OF DELIVERY

Cabinet in standard configuration* (cat. no. WZ-DSR-00x-x600-11-011):
- frame,
- horizontal dividers (quantity dependent on number of compartments within the cabinet),
- individual front door for each compartment,
- rear single panel for the full height of the cabinet,
- 2 pairs of 19" mounting profiles for each compartment,
- cable ducts (does not refer to cabinet without any compartments),
- solid roof,
- levelling feet,
- earthing cables.

*) Other configurations - see instructions on page 67.

COLOCATION CABINET DSR 19"

DSR cabinet with two compartments

DSR cabinet with four compartments, cable ducts lead from the bottom

DSR cabinet with four compartments, cable ducts lead from the top, roof with cable openings

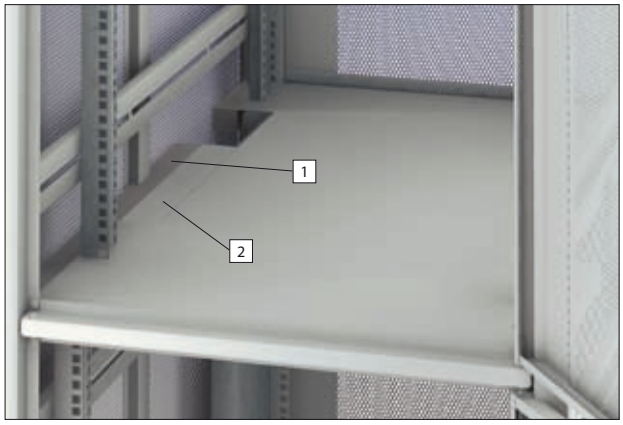

Supplementary accessories: **1 - self-adhesive insert**
2 - cable opening cover

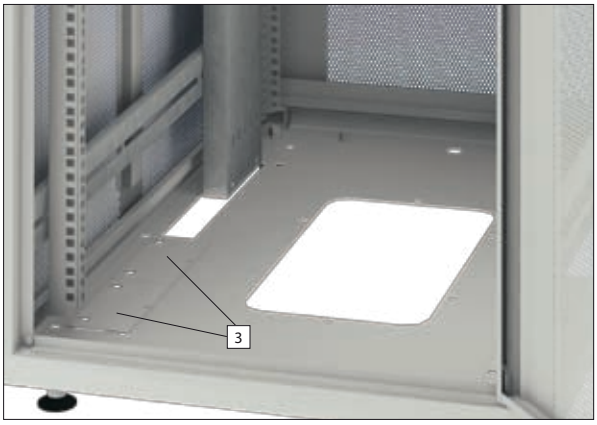

Supplementary accessories: **3 - blanking plate for cable opening**

DSR 19" COLOCATION CABINET

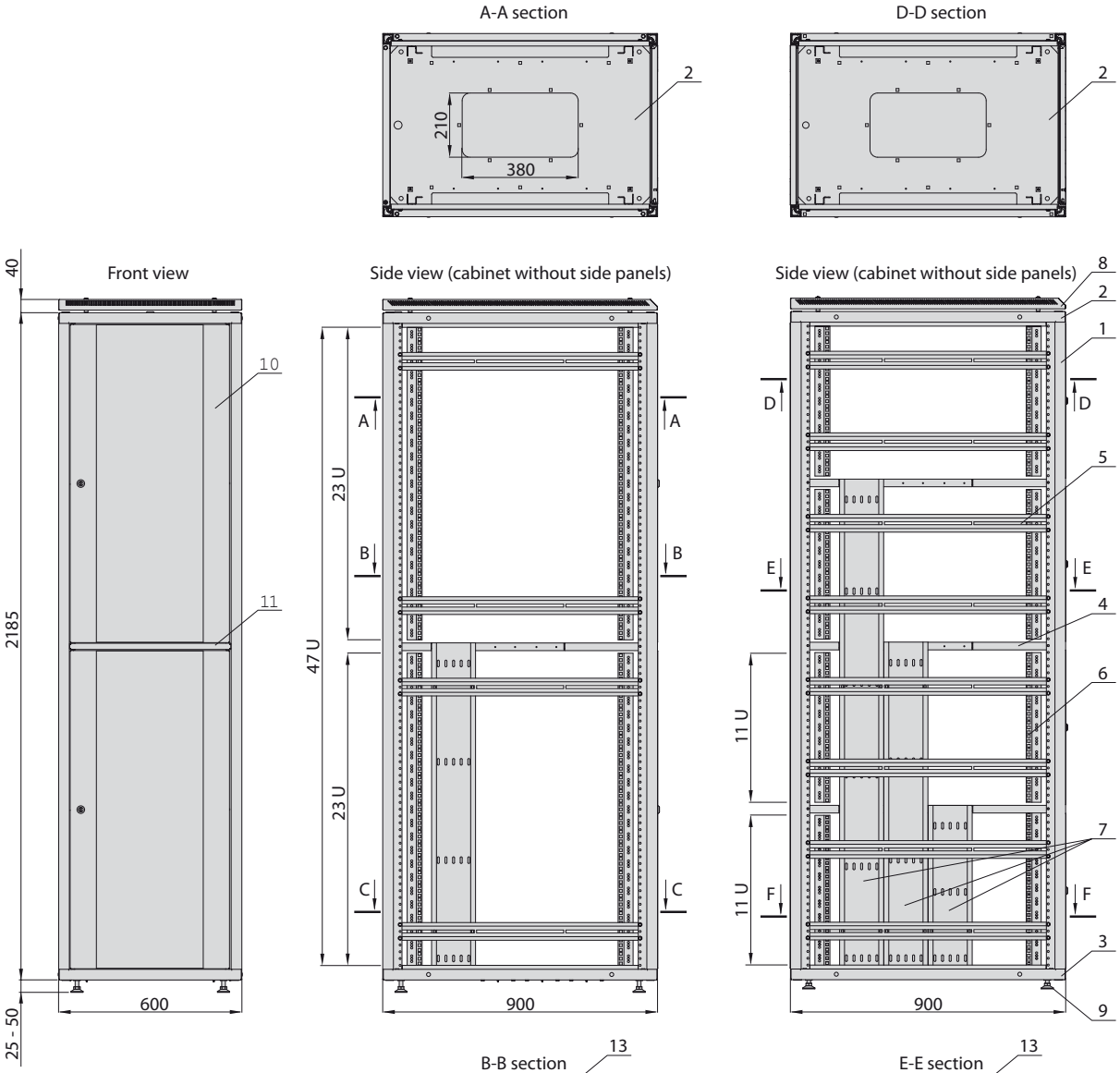

DESIGN

1. Frame's post
2. Frame's top plate
3. Frame's bottom plate
4. Divider
5. Supporting profile
6. Mounting profile
7. Cable duct
8. Solid roof
9. Levelling feet
10. Front door
11. Divider profile
12. Rear panel or rear door
13. Cable opening cover for divider (supplementary accessories)
14. Blanking plate of cable opening (supplementary accessories)

COLOCATION CABINET DSR 19"

CATALOGUE NUMBER OF DSR CABINET

WZ-DSR - 00X - XXXX - XX - 011

(F | R | LS | RS)

Split of cabinet's interior:

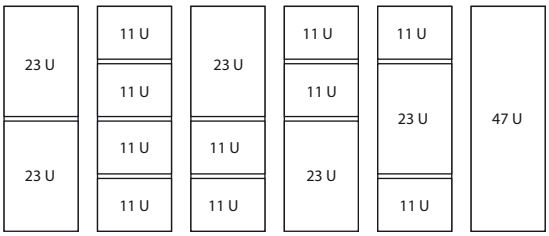

Note:
Height of horizontal dividers is 1 U.
Each compartment has individual 19" mounting profiles.

Type of base:
1 - levelling feet
2 - 100 mm plinth
3 - 100 mm plinth with levelling option
4 - 200 mm plinth
5 - 200 mm plinth with levelling option

Note:
For a detailed description of plinths, see pages 104-105.

Type of roof:

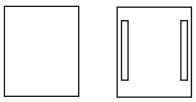

F - FRONT | **R** - REAR

Split of front and rear door/panel:

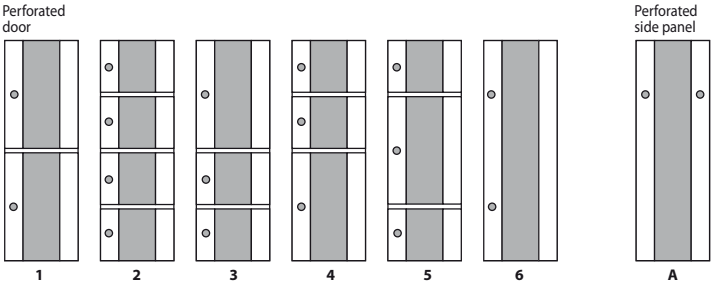

Notes:
Split of front and rear door/panel does not have to match with interior split of the cabinet.
Normally doors are fitted with single point locks without handle.
On request it is possible to use handle locking system.
As a standard, doors and panels have perforation with 30% clearance (perforation type A).
Perforation with larger clearance is available on request (types B or C – see page 52).

LS - LEFT SIDE | **RS** - RIGHT SIDE

Type of side panel:

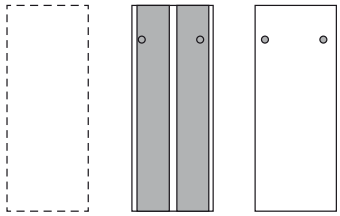

INSTRUCTIONS FOR ORDERING DSR CABINET

1. When ordering the DSR cabinet, please provide the appropriate **catalogue number according to the above information**, which specifies the interior split of the cabinet, as well as type of doors, panels, roof and base.
2. The next step is to specify **catalogue numbers of supplementary accessories** (such as: blanking plates, power strips, fan units etc.). Supplementary accessories are delivered in separate packaging including fixing hardware.

SUPPLEMENTARY ACCESSORIES

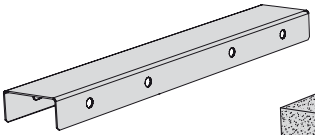

Cable opening cover for DSR divider - page 127

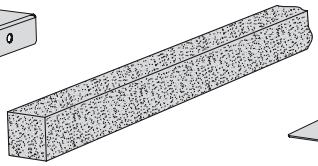

Self-adhesive insert of DSR divider - page 127

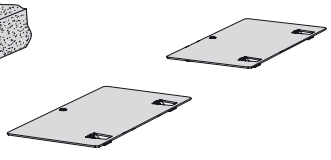

Blanking plate of cable opening - page 127

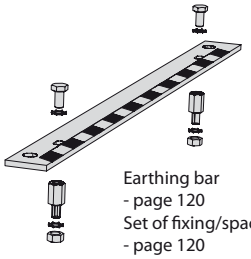

Earthing bar
- page 120
Set of fixing/spacer bolt
- page 120

SZE2 PC 19" COMPUTER CABINET IP54

DESIGNED FOR COMPUTER EQUIPMENT REQUIRING ANTIDUST PROTECTION

- Designed for protection of computer equipment used in industrial areas.
- The design enables selective admission of access to each section of the cabinet through use of locks with different cylinders.
- Design based on modified frame of the SZE2 cabinet.
- Easy baying in rows with SZE2 and SZE2 PC cabinets.
- Possibility of using supplementary accessories designed for SZE2 cabinets (page 286-317) and equipment for 19" installations.
- Possibility to manufacture cabinet frame, door, panels, supplementary roof and plinth of stainless sheet steel (on individual request).
- Non-standard versions on customer's request.

SCOPE OF DELIVERY

- sframe set on 100 mm plinth,
- 2 pairs of 19" mounting profiles,
- 2 flushed side panels,
- double front door with 3-point (rod-lath) lock and patent cylinder (upper door with glass, lower door solid),
- door for keyboard part with single-point lock (cam lock),
- rear panel,
- universal drawer for keyboard,
- solid blanking plate for top including sealing gasket,
- sliding gland plates for adjustable cable entry.

TECHNICAL DATA

Material:
Frame, side panels, solid steel door, plinth, mounting profiles - sheet steel
Door with glass - sheet steel, acrylic glass

Protection degree:
IP 54 in accordance with EN 60529

Surface finishing:

Frame, door, panels, plinth - powder paint with thick structure, light grey (RAL 7035). All other colour options on request.

Mounting profiles – Al-Zn coated.

Maximum load capacity:
The maximum weight of equipment mounted in SZE2 PC cabinets is 600 kg.

Roof - supplementary accssesories (see page 288)

COMPUTER CABINET IP54 SZE2 PC 19"

REFERENCE CHART

Width W [mm]	Depth D [mm]	Catalogue number		
600	600	**WZ-3004-00-06-011**	**WZ-3004-00-04-011**	**WZ-3004-00-02-011**
	800	**WZ-3004-00-05-011**	**WZ-3004-00-03-011**	**WZ-3004-00-01-011**
Usable height of cabinet HU [U = 44.45 mm]	**complete cabinet HU**	33 U	38 U	42 U
	upper part HU1	10 U	15 U	19 U
	lower part HU2	18 U	18 U	18 U
Total height of cabinet without plinth H [mm]		1600	1800	2000

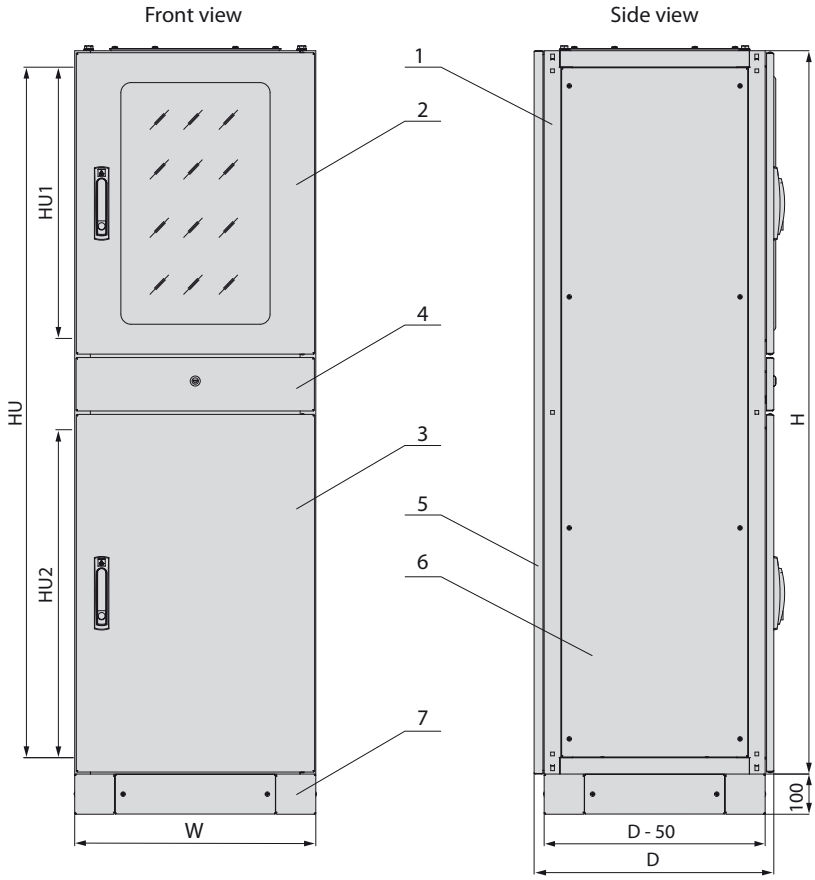

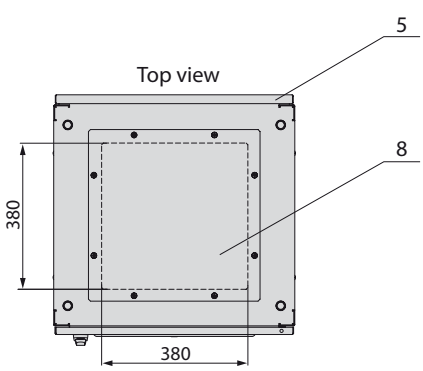

DESIGN

1. Cabinet's frame
2. Upper door with glass
3. Lower door - solid
4. Door for keyboard
5. Rear panel
6. Flushed side panel
7. Modular plinth
8. Solid blanking plate

Note:
The opening in the bottom plate of the SZE2 PC cabinet is identical as in the SZE2 cabinet (see page 280).

SZBk 19" CABINET COMPATIBLE WITH EMC REQUIREMENTS

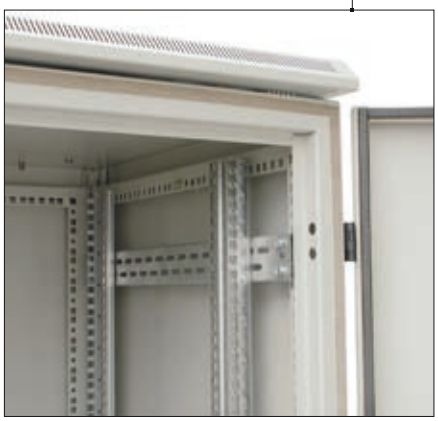

SZBk cabinet 600 mm wide

SHIELDED CABINET FOR APPLIANCES WHICH REQUIRE PROTECTION FROM HIGH ELECTRO-MAGNETIC INTERFERENCE

- Cabinet designed for indoor usage in rooms with working appliances which emit electromagnetic waves.
- Compatible with EMC requirements.
- Cabinet has received independent certification which acknowledges its shielding protection effectiveness:
  - certificate of Institute of Telecommunication and Acoustic, Polytechnic of Wroclaw,
  - certificate the Agency of Security, Warsaw.
- Cabinet can be equipped with optional ventilation and power cabling system, EMC protected.
- Cabinet can be equipped with some elements of supplementary accessories of SZB cabinets - plinths or castors, shelves, power distribution units etc.
- Non-standard versions on customer's request - see pages 72-73.

SCOPE OF DELIVERY

- frame,
- solid steel front door,
- two side panels,
- rear panel,
- standard roof,
- blanking plates for top and bottom plate of the frame,
- 2 pairs of 19" mounting profiles,
- earthing bar and cables,
- set on levelling feet,
- doors, panels, and roof fitted with a special conductive EMC seal.

JEDNOSTKA CERTYFIKUJĄCA

DEPARTAMENT BEZPIECZEŃSTWA TELEINFORMATYCZNEGO
AGENCJA BEZPIECZEŃSTWA WEWNĘTRZNEGO

CERTYFIKAT OCHRONY
ELEKTROMAGNETYCZNEJ nr 393/2002

Certyfikowany wyrób: Obudowa ekranująca typ SZBK 42U/x600x800

Producent wyrobu: Zakład Produkcji Automatyki Sieciowej S.A.
Przygórze 209, 57-431 Wolibórz k. Nowej Rudy

Wnioskodawca: Zakład Produkcji Automatyki Sieciowej S.A.
Przygórze 209, 57-431 Wolibórz k. Nowej Rudy

Kryteria oceny: Norma MIL-STD 285
Procedura pomiarowa PPLOE-3

Data wykonania badań: 22 - 24.10.2002 r.
Dokumentacja badań: Protokół nr 17/2002/A z dnia 29.10.2002 r.
Protokół nr 17/S/2002/A z dnia 29.10.2002 r.

Poziom ochrony: – poziom tłumienia promieniowania elektromagnetycznego, dla składowej elektrycznej, jest nie mniejszy niż 30 dB;
– poziom tłumienia promieniowania elektromagnetycznego, dla składowej magnetycznej, jest nie mniejszy niż 21 dB

Data ważności certyfikatu: bezterminowo

Wykorzystanie certyfikowanego wyrobu jako środka ochrony elektromagnetycznej dla przetwarzania informacji niejawnych w rozumieniu przepisów Ustawy z dnia 22 stycznia 1999 r. o ochronie informacji niejawnych (Dz. U. nr 11, poz. 95, z 1999 r. ze zm.) wymaga przeprowadzenia jego badań wraz z wyposażeniem.

KIEROWNIK JEDNOSTKI CERTYFIKUJĄCEJ DETI ABW
płk inż. Grzegorz Małecki

DYREKTOR DEPARTAMENTU BEZPIECZEŃSTWA TELEINFORMATYCZNEGO ABW
płk mgr inż. Krzysztof Jastrzębski

Warszawa, 2002-10-30

Certificate of electromagnetic protection

TECHNICAL DATA

Material:
Sheet steel

Protection degree:
IP 61 in accordance with EN 60529.

Surface finishing:
Frame, roof, panels, doors, plinth
- powder paint, light grey (RAL 7035).
All other colour options on request.

Mounting profiles, C-profiles - Al-Zn coated.

Maximum load capacity:
As given for SZB cabinets – see chart on page 43.

CABINET COMPATIBLE WITH EMC REQUIREMENTS SZBk 19"

REFERENCE CHART

Total width W [mm]	Frame's depth D [mm]	Catalogue number					
800	800	WZ-0795-01-01-011	WZ-0795-01-05-011	WZ-0795-01-09-011	WZ-0795-01-13-011	WZ-0795-01-17-011	WZ-0795-01-21-011
	600	WZ-0795-01-02-011	WZ-0795-01-06-011	WZ-0795-01-10-011	WZ-0795-01-14-011	WZ-0795-01-18-011	WZ-0795-01-22-011
600	800	WZ-0795-01-03-011	WZ-0795-01-07-011	WZ-0795-01-11-011	WZ-0795-01-15-011	WZ-0795-01-19-011	WZ-0795-01-23-011
	600	WZ-0795-01-04-011	WZ-0795-01-08-011	WZ-0795-01-12-011	WZ-0795-01-16-011	WZ-0795-01-20-011	WZ-0795-01-24-011
Usable height HU [U = 44.45 mm]		45 U	42 U	40 U	38 U	32 U	24 U
Frame's height H [mm]		2096	1963	1874	1785	1519	1163

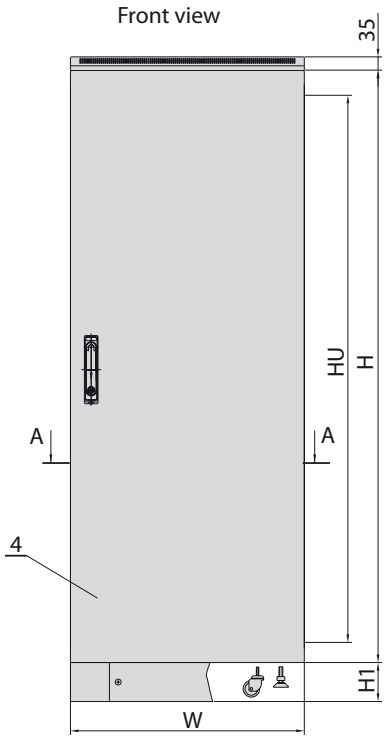

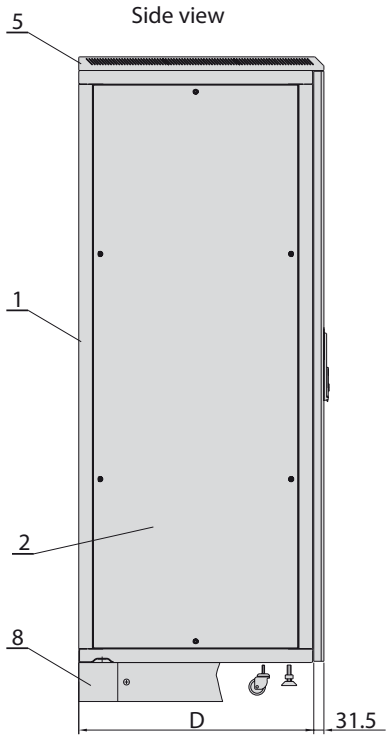

DESIGN

1. Frame
2. Side panel
3. Rear panel
4. Front door
5. Roof
6. Mounting profile
7. Earthing bar
8. Base (plinth, levelling feet or castors)

Note:
Plinth or castors are optional supplementary accessories in SZBk cabinet and should be ordered separately (see pages 104-107)

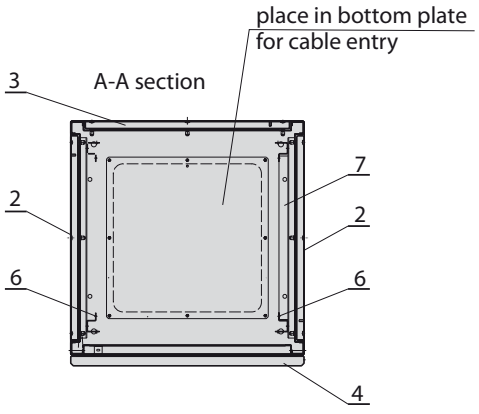

HEIGHT OF BASE H1

Feet: from 25 to 50 mm
Plinth: 100 or 200 mm
Castors, type 150: 108 mm
Castors, type 300: 129 mm

SZBk 19" CABINET COMPATIBLE WITH EMC REQUIREMENTS

EXAMPLES OF NON-STANDARD CABINETS

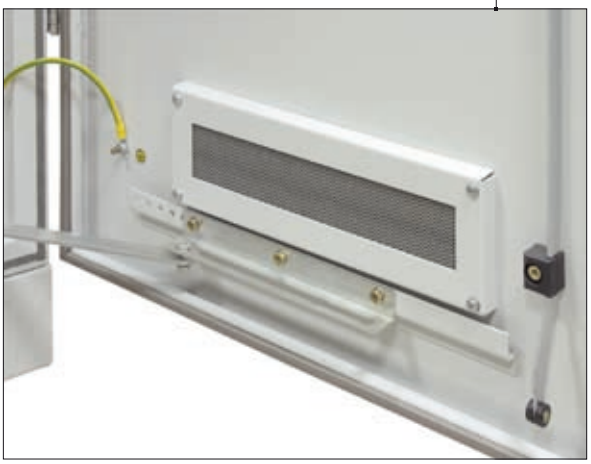

SZBk cabinet in special version:
- in the roof and front door there are went entries with EMC filter,
- the bottom of cabinet has special EMC cable entry.

CABINET COMPATIBLE WITH EMC REQUIREMENTS SZBk 19"

EXAMPLES OF NON-STANDARD CABINETS

SZBk cabinet in special version:
- EMC version has air grates installed in the door,
- cap with metal chokes mounted in the bottom plate.

A set of two SZBk cabinets in special version, equipped with perforated mounting plates according to customer's design. Door has air grates in the EMC version, in the bottom plate there are sliding caps with EMC foam.

SJB 19" NETWORK CABINET

SJB 15 U cabinet finished in RAL 9005

CABINET FOR OFFICE APPLICATIONS

- SJB cabinets are perfect solution for small network systems installed in offices.
- The design of the cabinet is based on a self-supporting body with no frame.
- Desktop made of furniture board gives the cabinet a sophisticated look and allows it to blend in with the existing interior decor.

TECHNICAL DATA

Material:
Body, rear panel, mounting angles - sheet steel
Door - safety glass
Desktop - MDF board

Protection degree:
IP 20 in accordance with EN 60529.

Surface finishing:
Body and rear panel – powder paint, RAL 7035 or RAL 9005. Other colour options available on request.

Mounting angles – Al-Zn coated.

Desktop colour:
As a standard option, cabinets are supplied with desktops made of Calvados-laminated MDF board. Other desktop colours or materials are available on request.

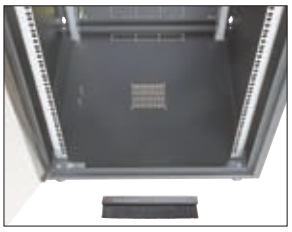

View of the bottom plate in the SJB cabinet. At the rear panel, there is a cable opening covered with knock-out blanking plate which can be replaced with a brush strip (supplied together with the cabinet).

SCOPE OF DELIVERY

- cabinet body with safety glass door and removable rear panel,
- desktop made of furniture board,
- 2 pairs of mounting angles spaced at 19",
- levelling feet,
- rear panel earthing cable,
- brush strip for the cable opening (instead of knock-out blanking plate).

SUPPLEMENTARY ACCESSORIES (ORDERED SEPARATELY)

- earthing strip (page 94),
- shelves, drawers, power strips etc. (pages 93, 111-116, 122-123, 130-147, 260-261, 263),
- desktop elevation kit.

DESKTOP ELEVATION KIT FOR SJB CABINET

The kit makes it possible to elevate the desktop by 19 mm over the top plate, thus increasing air flow through the cabinet, and enables fan mounting to the top plate.

Scope of delivery:
Set: 4 screws M6x30, 4 washers, 4 spacing sleeves

Package	Catalogue number
1 set	WZ-3987-90-00-000

NETWORK CABINET SJB 19"

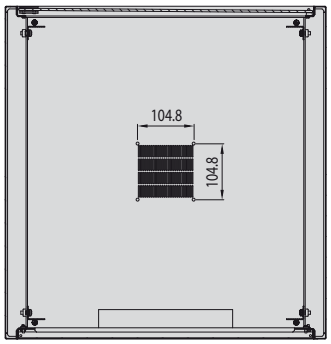

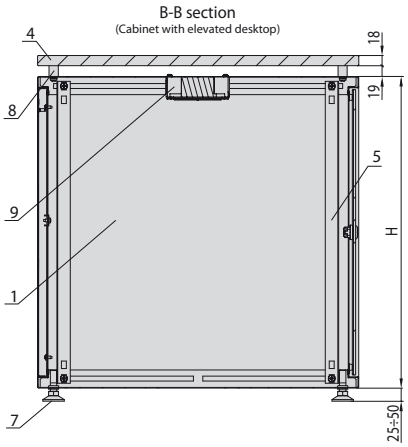

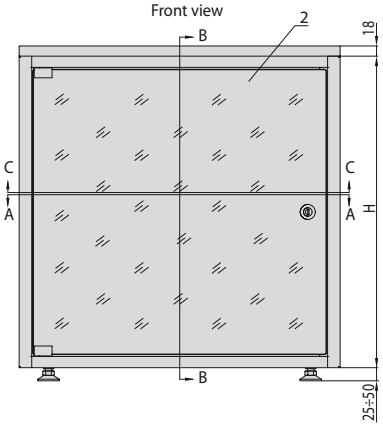

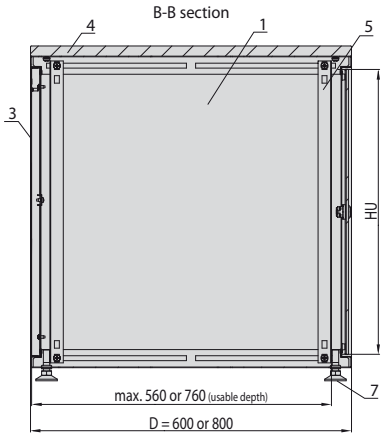

SJB 18 U cabinet finished in RAL 7035

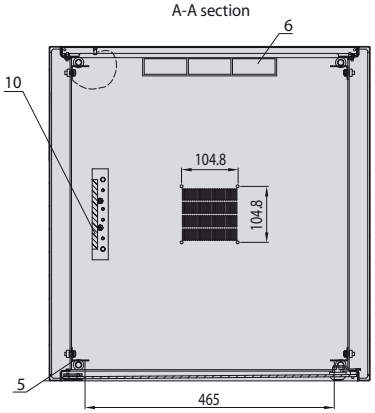

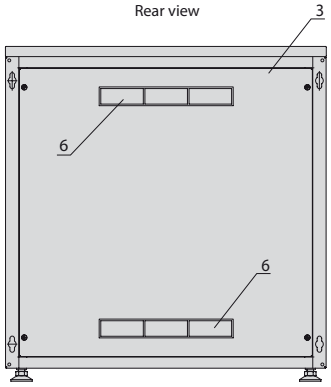

DESIGN

1. Cabinet's body
2. Glass door
3. Rear panel
4. Desktop
5. Mounting angle
6. Knock-out blanking plate
7. Levelling feet

Supplementary accessories ordered separately:
8. Spacing sleeve for roof elevation (page 74)
9. Fan (page 93)
10. Earthing strip (page 94)

REFERENCE CHART

Total width W [mm]	Total depth D [mm]	Body height H [mm]	Usable height HU [U = 44.45 mm]	Maximum load capacity [kg]	Catalogue number	
					Cabinet finished in RAL 7035	Cabinet finished in RAL 9005
600	800	871	18 U	45	WZ-6729-01-04-011	WZ-6729-01-04-161
		737	15 U	38	WZ-6729-01-03-011	WZ-6729-01-03-161
	600	871	18 U	45	WZ-3987-01-04-011	WZ-3987-01-04-161
		737	15 U	38	WZ-3987-01-03-011	WZ-3987-01-03-161
		604	12 U	30	WZ-3987-01-02-011	WZ-3987-01-02-161
		515	10 U	30	WZ-3987-01-01-011	WZ-3987-01-01-161

SJB 19" Silent NETWORK/SERVER CABINET

SJB Silent 18 U cabinet

CABINET FOR OFFICE APPLICATIONS

- SJB cabinets are perfect solution for small network systems installed in offices.
- The design of the cabinet is based on a self-supporting body with no frame.
- Desktop made of furniture board gives the cabinet a sophisticated look and allows it to blend in with the existing interior decor.
- Acoustic foam reduces noise emission by 8 dB, eliminating discomfort caused by noise generated by the devices inside the silent cabinet.

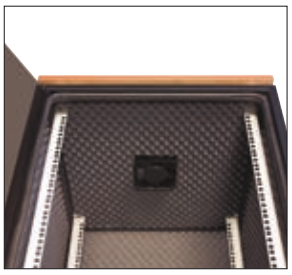

Fan mounted on the top plate of the SJB Silent cabinet

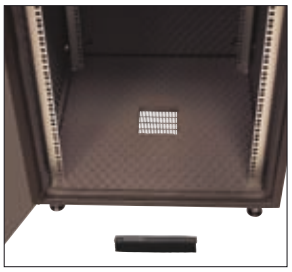

View of the bottom plate in the SJB Silent cabinet. At the bottom plate, top plate and rear panel, there is a cable openings covered with knock-out blanking plates which can be replaced with a brush strip (supplied together with the cabinet).

TECHNICAL DATA

Material:
Body, rear panel, mounting angles - sheet steel
Door - safety glass
Desktop - MDF board

Protection degree:
IP 20 in accordance with EN 60529.

Surface finishing:

Body and rear panel – powder paint, RAL 7035 or RAL 9005.
Other colour options available on request.

Mounting angles – Al-Zn coated.

Desktop colour:
As a standard option, cabinets are supplied with desktops made of Calvados-laminated MDF board. Other desktop colours or materials are available on request.

SCOPE OF DELIVERY

- cabinet body with safety glass door and removable rear panel,
- desktop made of furniture board, desktop elevation kit,
- 2 pairs of mounting angles spaced at 19",
- rear panel earthing cable,
- brush strip for the cable opening (instead of knock-out blanking plate),
- 4 levelling feet,
- fan,
- interior of the cabinet is covered with acoustic foam.

SUPPLEMENTARY ACCESSORIES (ORDERED SEPARATELY):

- earthing strip (page 94),
- shelves, drawers, power strips etc. (pages 111-116, 122-123, 130-147, 260-261, 263).

NETWORK/SERVER CABINET SJB 19" Silent

C-C section

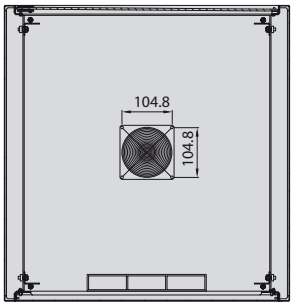

Front view

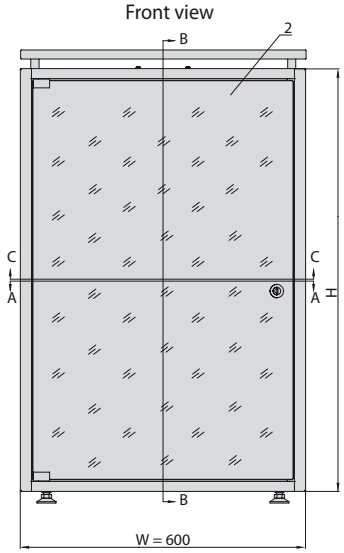

B-B section

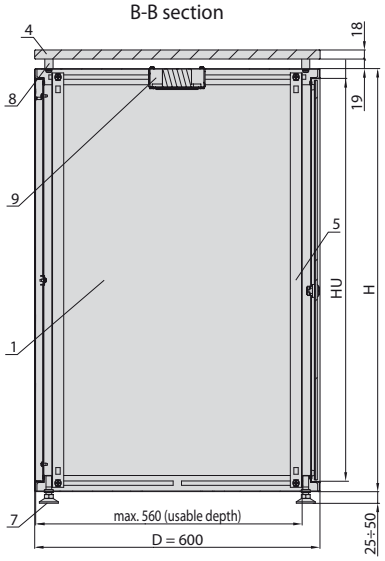

DESIGN

1. Cabinet's body
2. Glass door
3. Rear panel
4. Desktop
5. Mounting angle
6. Knock-out blanking plate
7. Levelling feet
8. Spacing sleeve
9. Fan

Supplementary accessories ordered separately:
10. Earthing strip (page 94)

A-A section

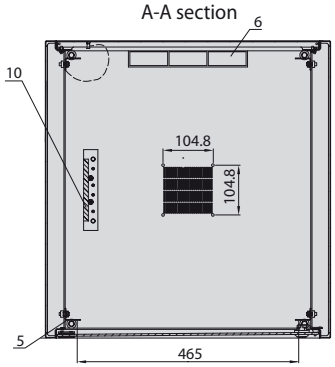

Rear view

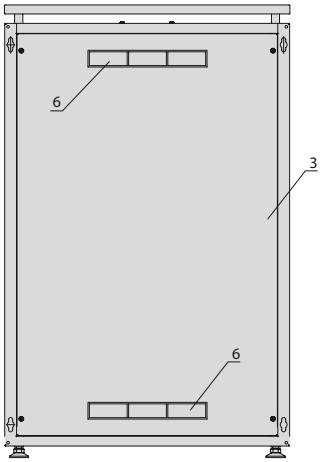

Note:

Cabinet in the drawing is shown without the acoustic foam which reduces cabinet's usable depth by 20 mm.

REFERENCE CHART

Total width W [mm]	Total depth D [mm]	Body height H [mm]	Usable height HU [U = 44.45 mm]	Maximum load capacity [kg]	Catalogue number
					Cabinet finished in RAL 9005
600	600	871	18 U	45	WZ-4888-01-00-161

SZU 19"/21" TELECOMMUNICATION CABINET

SZU 21" cabinet
with metal perforated door

UNIVERSAL TELECOMMUNICATION CABINET

- Designed according to the ETS 300 119-2 and IEC 917-2-1 standards.
- Depending on mounting profiles used, it makes it possible to install equipment in 19" or 21" spacing.
- Application of 21"-19" adapters allows installation of both 19" and 21" appliances in one cabinet.
- Possibility to set the cabinet on adjustable feet hidden in the bottom plate of the frame. Adjustment range 15 mm.
- Insertion of cables into the cabinet from the top and from the bottom through maximally enlarged openings in the top and bottom plate.
- Side panels additionally protected from the inside against disassembly from the outside.

Available types of front and rear door:
- glass door with two single locks
- metal perforated door with three point lock
- rear door can be changed for rear panel

Supplementary accessories ordered separately
(see page 128):
- adapters for fixing 19" appliances on 21" mounting profiles
- lifting eyes

SCOPE OF DELIVERY

- cabinet's frame
- mounting profiles in 19" or 21" spacing. In cabinets 800 and 600 mm deep there are two pairs of mounting profiles; with just one pair in cabinets 300 mm deep.
- two side panels
- front door
- rear door or rear panel
- eight cable bars
- earthing bar
- two perforated blanking plates (in the top and the bottom plate)
- ESD antistatic earthing band

TECHNICAL DATA

Material:
Steel sheet

Surface finishing:
Frame, panels, metal door - powder painted in RAL 7035. Application of other colours on request.

Mounting profiles and blanking plates in the top and bottom plate - Al-Zn coated

Maximum load capacity:
The maximum weight of equipment mounted in SZU cabinet is 250 kg

CATALOGUE NUMBER OF SZU CABINET

WZ-SZU - 00X - XXAA - X0 - 011

Reference number
defining dimensions of the cabinet (see reference chart)

Type of front door:
1 - glass door with two single locks
2 - metal perforated* door with rod-lath lock

*) Perforation type C - see page 52

Types of mounting profiles:
1 - 19" mounting profiles
2 - 21" mounting profiles

Type of rear door or rear panel:
1 - glass door with two single locks
2 - metal perforated* door with rod-lath lock
A - solid metal panel

*) Perforation type C - see page 52

TELECOMMUNICATION CABINET SZU 19"/21"

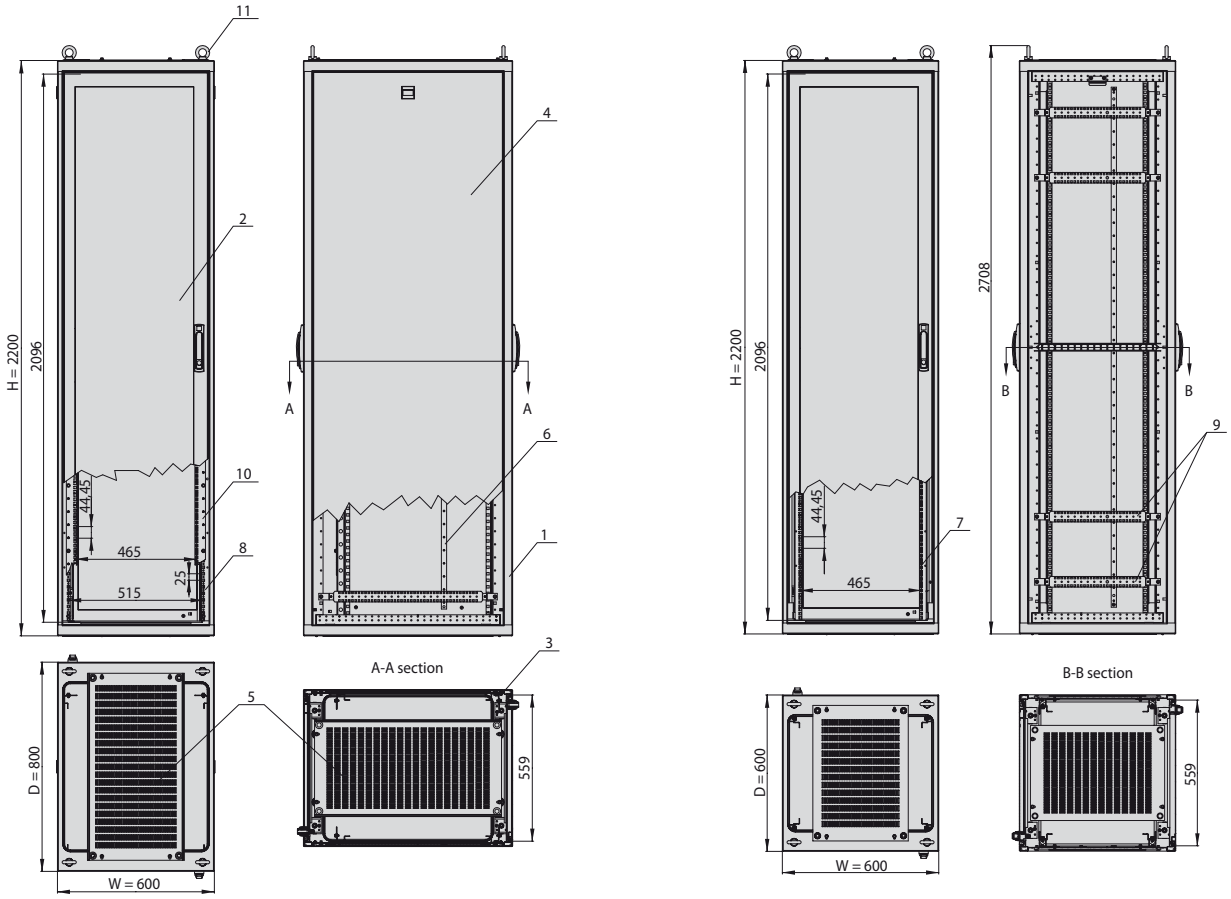

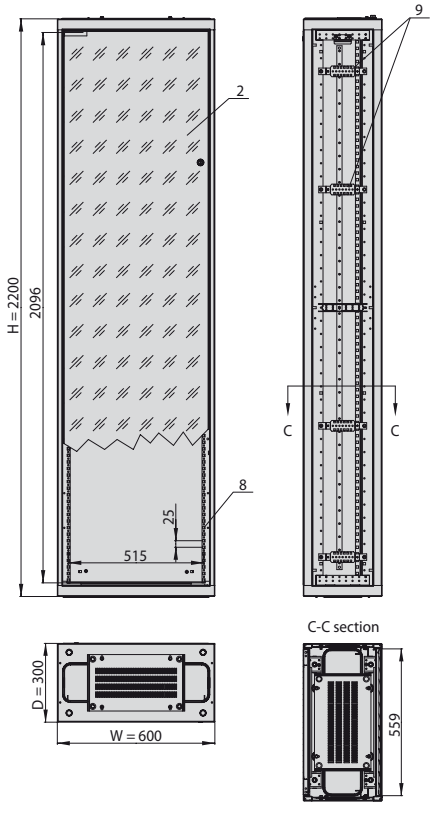

DESIGN

1. Cabinet's frame
2. Front door
3. Rear door
4. Side panel
5. Blanking plate of bottom or top plate
6. Earthing bar
7. 19" mounting profile
8. 21" mounting profile
9. Cross profile for cable fixing

Supplementary accessories ordered separately (page 128):
10. 21"-19" adapter
11. Lifting eye

Note:
Drawings represent sample configurations.

REFERENCE CHART

Usable height		Dimensions [mm]			Reference number
19" version [1 U = 44.45 mm]	21" version [1 SU = 25 mm]	H	W	D	
47 U	83 SU	2200	600	800	1
				600	2
				300	3

WALL-MOUNTED CABINETS AND FRAMES

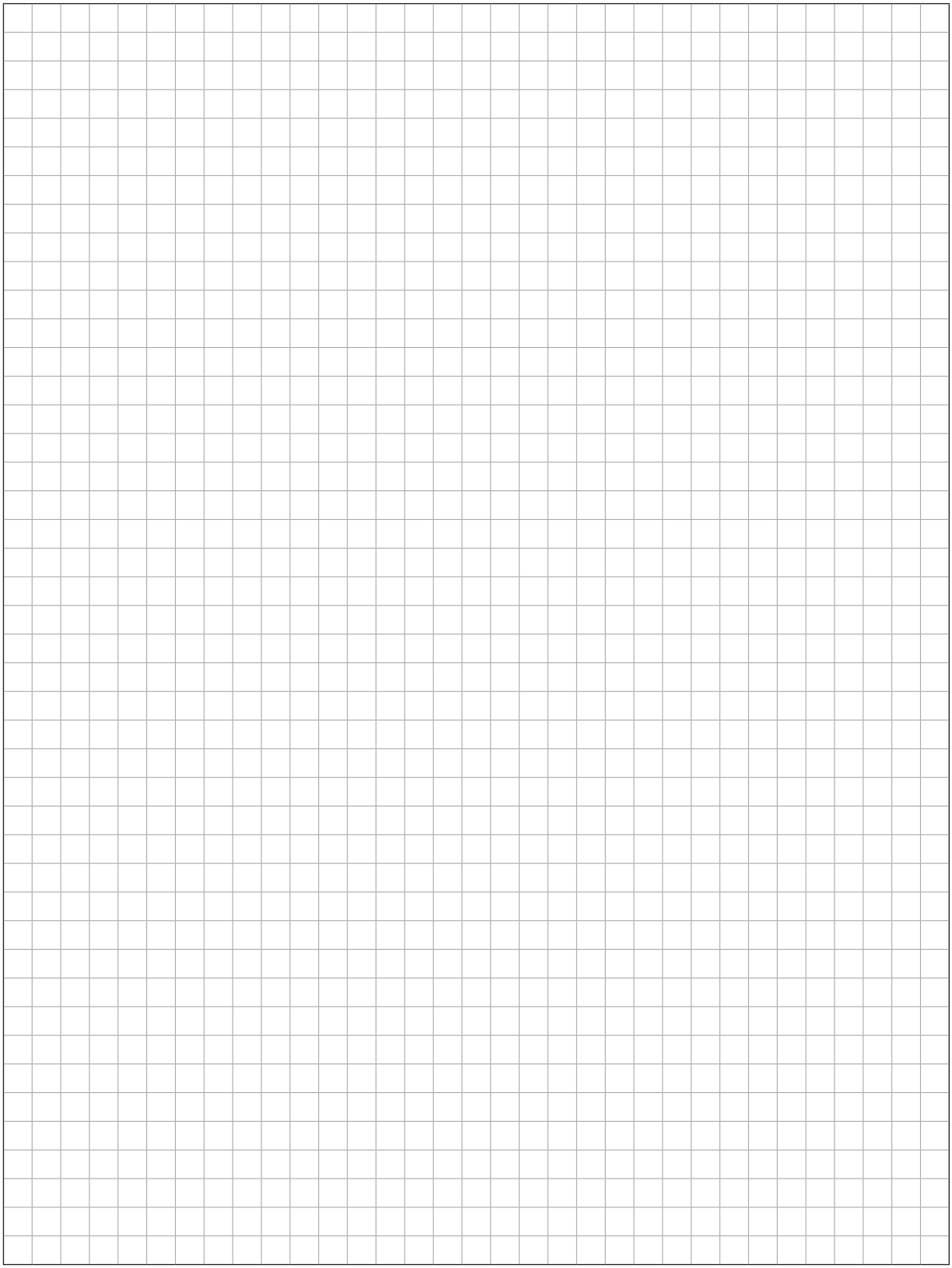

WALL-MOUNTED CABINETS AND FRAMES

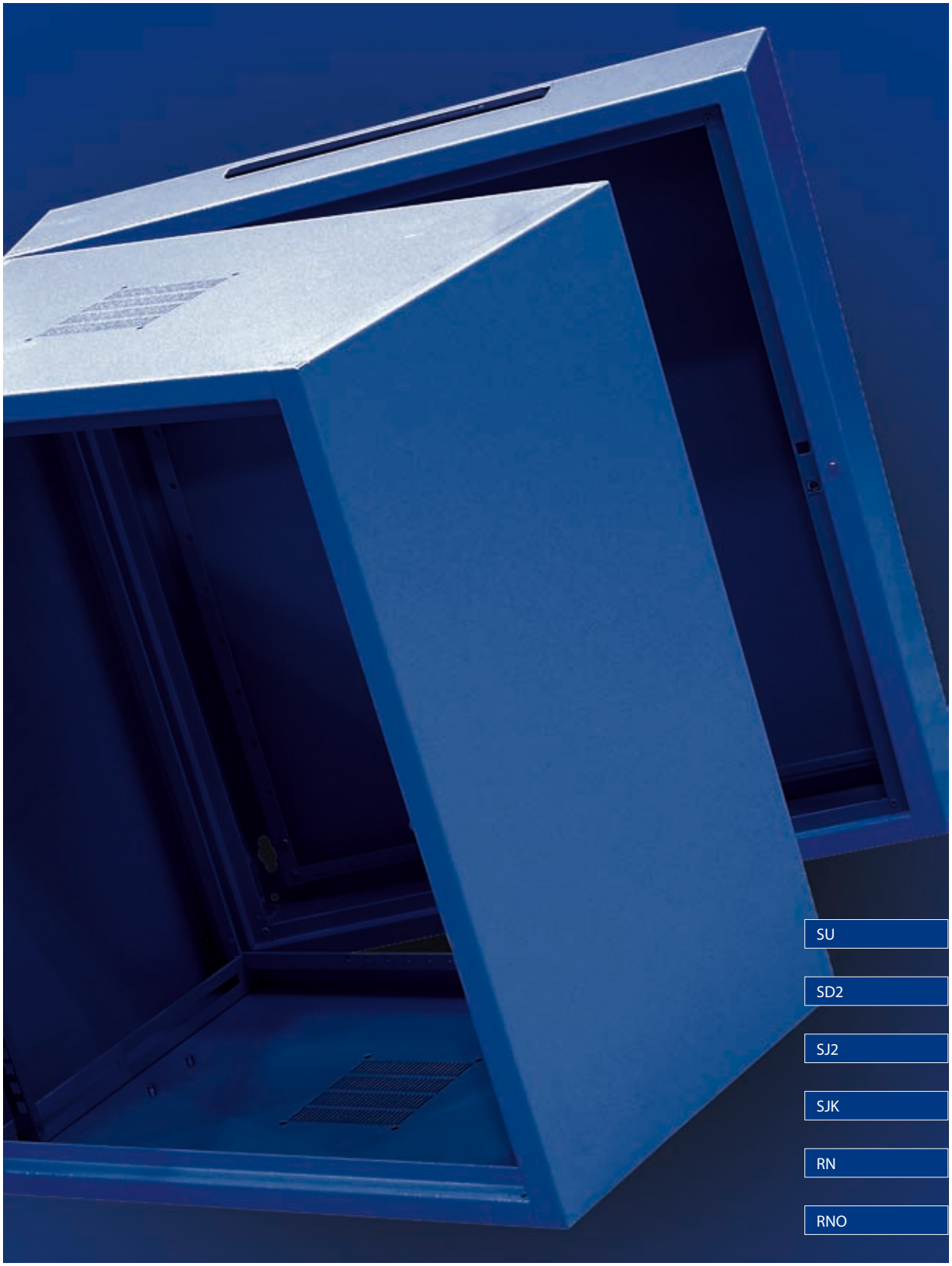

WALL-MOUNTED CABINETS AND FRAMES

SU 19" WALL-MOUNTED NETWORK CABINET

SU cabinet 12 U high with safety glass door

SINGLE-SECTION CABINET WITH REMOVABLE SIDE PANELS

- Designed for indoor applications.
- Available in 6 usable heights and 3 depths (see reference chart).
- The design of the cabinet is based on dismountable frame with safety glass or steel front door and removable rear and side panels.
- Standard version is equipped with two adjustable 19" mounting angles, a knock-out blanking plate and a brush opening (potential cable entry point)
- The rear and side panels, as well as steel door, are provided with earthing connections.
- Cabinets can be fastened directly to the wall without using any brackets - convenient internal access to wallfixing screws.
- Easy change of door opening direction and cable opening layout by rotating by 180°.
- Wide range of supplementary accessories: shelves, drawers, fan kit, power strips etc.
- Cabinet can be equipped with additional rear adjustable 19" mounting angles or mounting profiles.

SU cabinet 6 U high - rear view

SCOPE OF DELIVERY

Cabinets are packed in cardboard boxes. In the packing there is a template for drilling holes in the wall.

TECHNICAL DATA

Material:
Frame, rear and side panels, mounting angles - sheet steel
Door - safety glass or sheet steel

Surface finishing:
Frame and mounting angles – Al-Zn coated.
Steel door, side panels and rear panel – powder paint, light grey (RAL 7035). All other colour options on request.

Protection degree:
IP 20 in accordance with EN 60529
(does not apply to brush cable entries).

SU cabinet 6 U high with safety glass door

WALL-MOUNTED NETWORK CABINET SU 19"

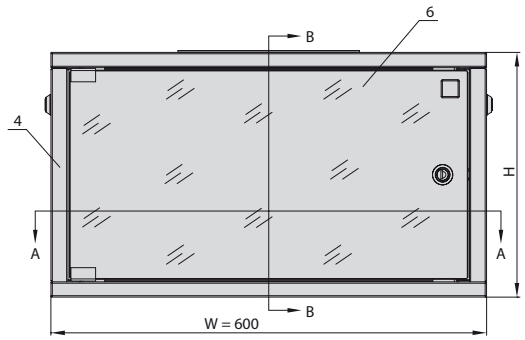

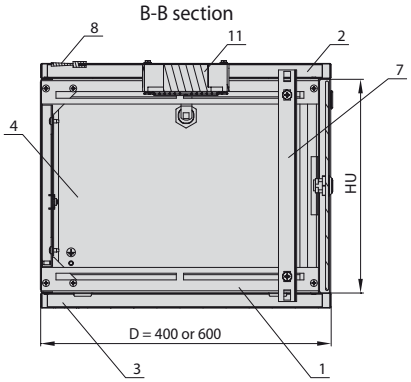

DESIGN

1. Cabinet's screwed frame
2. Top plate
3. Bottom plate
4. Removable side panel
5. Removable rear panel
6. Glass door (steel door as anoption)
7. Mounting angle
8. Brush strip
9. Knock-out blanking plate

Supplementary accessories ordered separately:
10. Earthing bar
11. Fan

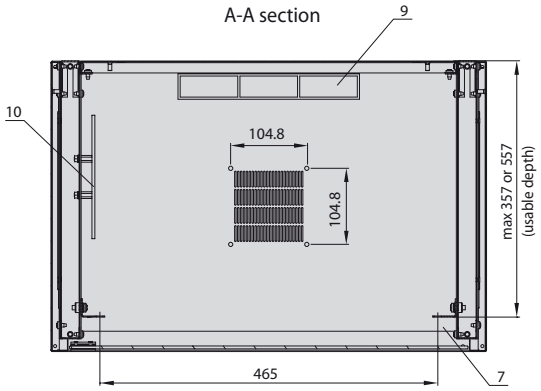

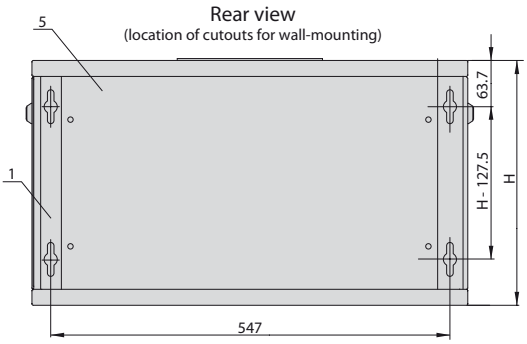

REFERENCE CHART

Packing method	Total width W [mm]	Total depth H [mm]	Total heigh H [mm]	Usable height HU [U = 44.45 mm]	Maximum load capacity [kg]	Catalogue number	
						Cabinet with glass door	Cabinet with steel door
Assembled cabinet	600	600	871	18 U	30	WZ-3286-01-S6-011	WZ-3286-01-M6-011
			737	15 U	25	WZ-3286-01-S5-011	WZ-3286-01-M5-011
			604	12 U	20	WZ-3286-01-S4-011	WZ-3286-01-M4-011
			515	10 U	16	WZ-3286-01-S3-011	WZ-3286-01-M3-011
			337	6 U	10	WZ-3286-01-S2-011	WZ-3286-01-M2-011
			248	4 U	7	WZ-3286-01-S1-011	WZ-3286-01-M1-011
	600	400	871	18 U	45	WZ-2733-01-S6-011	WZ-2733-01-M6-011
			737	15 U	37	WZ-2733-01-S5-011	WZ-2733-01-M5-011
			604	12 U	30	WZ-2733-01-S4-011	WZ-2733-01-M4-011
			515	10 U	25	WZ-2733-01-S3-011	WZ-2733-01-M3-011
			337	6 U	15	WZ-2733-01-S2-011	WZ-2733-01-M2-011
			248	4 U	10	WZ-2733-01-S1-011	WZ-2733-01-M1-011
Cabinet in a flat pack for self assembly	600	400	871	18 U	45	WZ-2733-01-F6-011	-
			737	15 U	37	WZ-2733-01-F5-011	-
			604	12 U	30	WZ-2733-01-F4-011	-
			515	10 U	25	WZ-2733-01-F3-011	-
			337	6 U	15	WZ-2733-01-F2-011	-
			248	4 U	10	WZ-2733-01-F1-011	-

SD2 19" WALL-MOUNTED NETWORK CABINET

SD2 cabinet 12 U with safety glass door

DOUBLE-SECTION CABINET

- Designed for indoor applications.
- Available in 5 usable heights (see reference chart).
- Consists of two basic parts:
  - 19" part with safety glass or steel door,
  - wall-mounted part with removable rear panel.
- A standard cabinet is equipped with two easily adjustable mounting angles spaced at 19".
- The steel door and rear panel are provided with earthing cables.
- The wall part of the cabinet has two cable openings. One cable opening is completed with a brush strip, the other is covered with knock-out blanking plate.
- The door opening direction and cable opening layout can be easily changed by rotating the cabinet by 180°.
- Wide range of supplementary accessories: shelves, drawers, fan kit, power strips, blanking plates, earthing bar etc.
- Cabinet can be equipped with additional rear adjustable 19" mounting angles or mounting profiles.

SD2 cabinet - rear view

TECHNICAL DATA

Material:
Body, rear panel, mounting angles - sheet steel
Door - safety glass or sheet steel

Surface finishing:

Powder paint, light grey (RAL 7035).
All other colour options on request.

Mounting angles - Al-Zn coated.

Protection degree:
IP 20 in accordance with EN 60529
(does not apply to brush cable entries).

SCOPE OF DELIVERY

Cabinets are packed in cardboard boxes. In the packing there is a template for drilling holes in the wall.

Bottom plate of SD2 cabinet

Top plate of SD2 cabinet

WALL-MOUNTED NETWORK CABINET SD2 19"

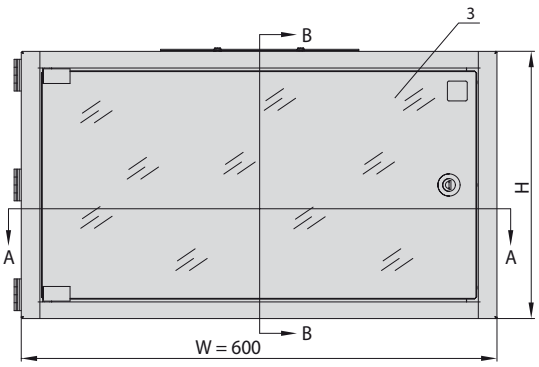

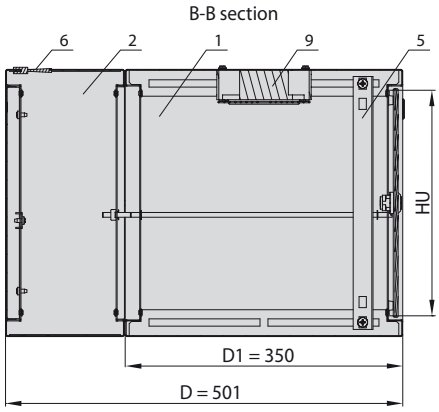

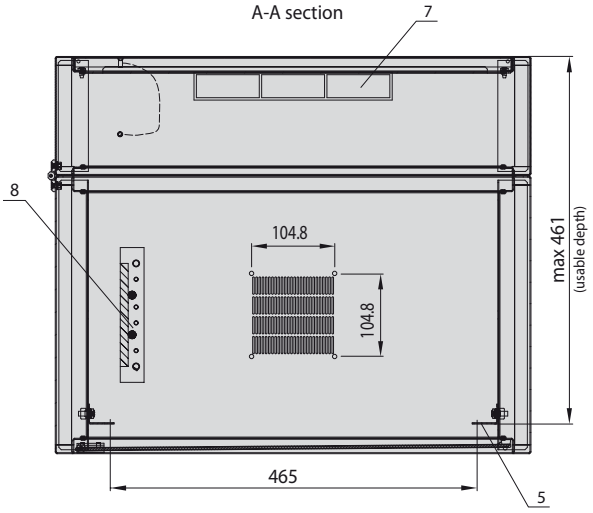

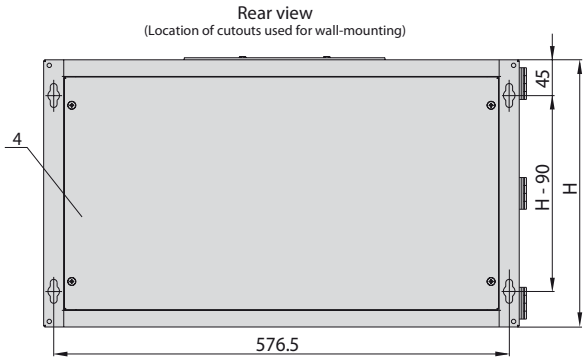

DESIGN

1. Body of 19" part
2. Body of wall part
3. Glass door (steel door as an option)
4. Rear panel
5. Mounting angle
6. Cable entry
7. Knock-out blanking plate

Supplementary accessories ordered separately:
8. Earthing bar
9. Fan

REFERENCE CHART

Total width W [mm]	Total depth D [mm]	Depth of 19" part D1 [mm]	Total heigh H [mm]	Usable height HU [U = 44.45 mm]	Maximum load capacity [kg]	Catalogue number	
						Cabinet with glass door	Cabinet with steel door
600	501	350	871	18 U	30	WZ-3505-01-05-011	WZ-3505-01-M5-011
			737	15 U	30	WZ-3505-01-04-011	WZ-3505-01-M4-011
			604	12 U	30	WZ-3505-01-03-011	WZ-3505-01-M3-011
			515	10 U	20	WZ-3505-01-02-011	WZ-3505-01-M2-011
			337	6 U	20	WZ-3505-01-01-011	WZ-3505-01-M1-011

SJ2 19" WALL-MOUNTED NETWORK CABINET

SJ2 cabinet 12 U with safety glass door

SJ2 cabinet 18 U
with safety glass door

SINGLE-SECTION CABINET

- Designed for indoor applications.
- Available in 2 depths and 5 usable heights (see reference chart).
- The design of the cabinet is based on a metal body with safety glass door and removable rear panel.
- A standard cabinet is equipped with two easily adjustable mounting angles spaced at 19".
- The steel door and rear panel are provided with earthing cables.
- The body of the cabinet has two cable openings. One cable opening is completed with brush strip, the other with knock-out blanking plate.
- The door opening direction and cable opening layout can be easily changed by rotating the cabinet by 180°.
- Wide range of supplementary accessories: shelves, drawers, fan kit, power strips etc.
- Cabinet can be equipped with additional rear adjustable 19" mounting angles or mounting profiles.

TECHNICAL DATA

Material:
Body, pear panel, mounting angles - sheet steel
Door - safety glass or sheet steel

Surface finishing:

Powder paint, light grey (RAL 7035).
All other colour options on request.

Mounting angles - Al-Zn coated.

Protection degree:
IP 20 in accordance with EN 60529
(does not apply to brush cable entries).

SCOPE OF DELIVERY

Cabinets are packed in cardboard boxes. In the packing there is a template for drilling holes in the wall.

Top plate of SJ2 cabinet

Bottom plate of SJ2 cabinet

WALL-MOUNTED NETWORK CABINET SJ2 19"

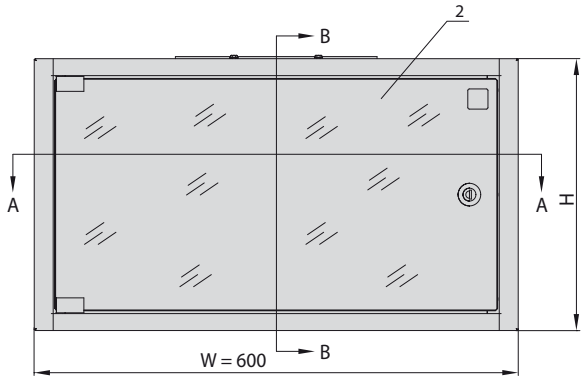

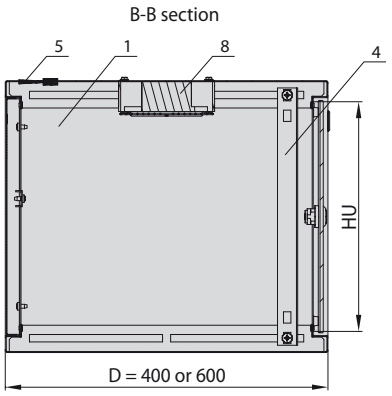

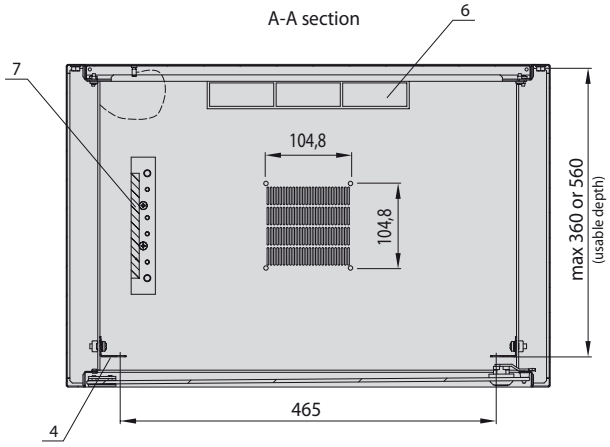

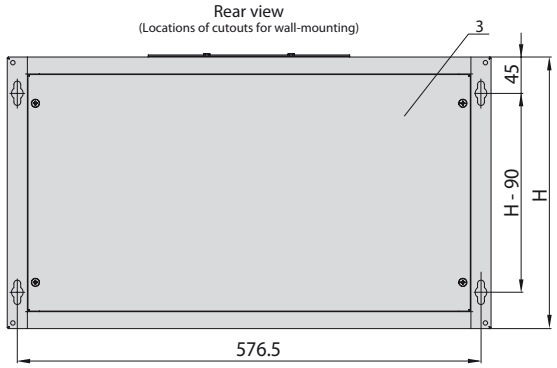

DESIGN

1. Cabinet's body
2. Glass door (steel door as an option)
3. Rear panel
4. Mounting angle
5. Brush strip
6. Knock-out blanking plate

Supplementary accessories ordered separately:
7. Earthing bar
8. Fan

REFERENCE CHART

Total width W [mm]	Total depth D [mm]	Total height H [mm]	Usable height HU [U = 44.45 mm]	Maximum load capacity [kg]	Catalogue number	
					Cabinet with glass door	Cabinet with steel door
600	600	871	18 U	30	WZ-3715-01-05-011	WZ-3715-01-10-011
		737	15 U	25	WZ-3715-01-04-011	WZ-3715-01-09-011
		604	12 U	25	WZ-3715-01-03-011	WZ-3715-01-08-011
		515	10 U	20	WZ-3715-01-02-011	WZ-3715-01-07-011
		337	6 U	20	WZ-3715-01-01-011	WZ-3715-01-06-011
600	400	871	18 U	40	WZ-3504-01-05-011	WZ-3504-01-M5-011
		737	15 U	35	WZ-3504-01-04-011	WZ-3504-01-M4-011
		604	12 U	30	WZ-3504-01-03-011	WZ-3504-01-M3-011
		515	10 U	30	WZ-3504-01-02-011	WZ-3504-01-M2-011
		337	6 U	25	WZ-3504-01-01-011	WZ-3504-01-M1-011

SJK 19" WALL-MOUNTED NETWORK CABINET

CABINET FOR LIGHT EQUIPMENT

- Designed for small indoor networks.
- Available in 3 size variations (see reference chart). Other dimensions on request.
- The cabinet is based on metal body with metal solid door. It includes two 19" mounting angles fixed to the walls of the body.
- Openings in the top and bottom plate are covered with knockout blanking plates.
- The cabinet does not have a rear panel.

TECHNICAL DATA

Material:
Sheet steel

Surface finishing:
Powder painted in RAL 7035.
Application of other colours on request.

Protection degree:
IP 20 (for cabinet mounted to the wall)
in accordance with EN 60529.

WALL-MOUNTED NETWORK CABINET SJK 19"

Front view

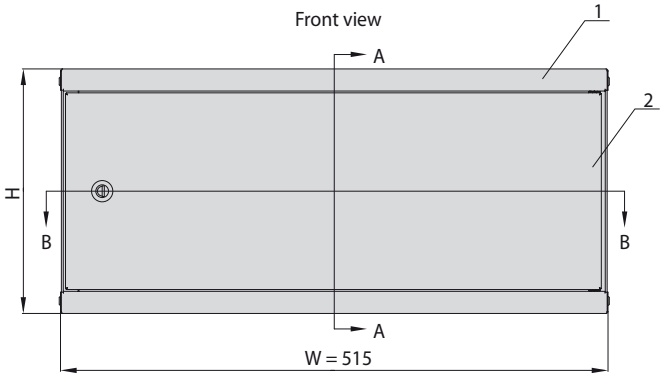

A-A section

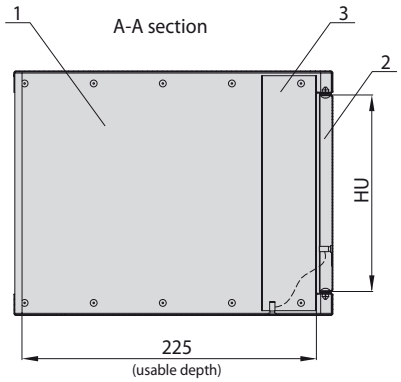

Rear view

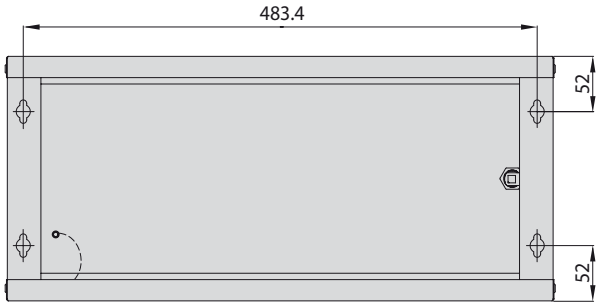

B-B section

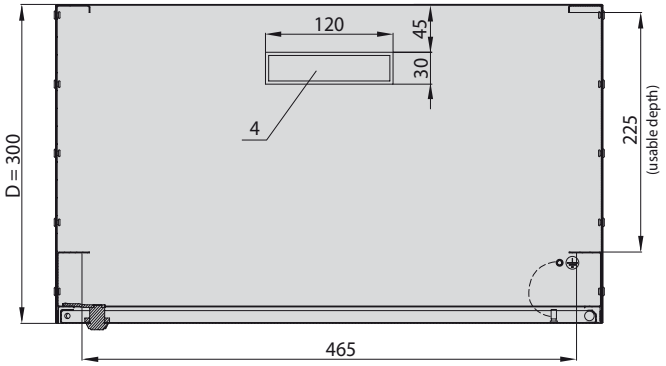

DESIGN

1. Body
2. Door
3. Mounting angle
4. Knock-out blanking plate

REFERENCE CHART

Total width W [mm]	Total depth D [mm]	Total height H [mm]	Usable height HU [U = 44.45 mm]	Maximum load capacity [kg]	Catalogue number
515	300	497	10 U	10	WZ-3684-01-02-011
		320	6 U	6	WZ-3684-01-01-011
		230	4 U	4	WZ-3684-01-00-011

RN 19" WALL-MOUNTED NETWORK FRAME

INTENDED FOR LIGHT EQUIPMENT WHICH DOES NOT REQUIRE FULL ENCLOSURE

- Simple and cheap solution for wall-mounted installation of 19" equipment.
- Available in 3 usable height options.

TECHNICAL DATA

Material:
Sheet steel

Surface finishing:
Powder paint, light grey (RAL 7035).
Application of other colours on request.

Scope of delivery:
Wall frame (1 pc.) without fixing accessories.

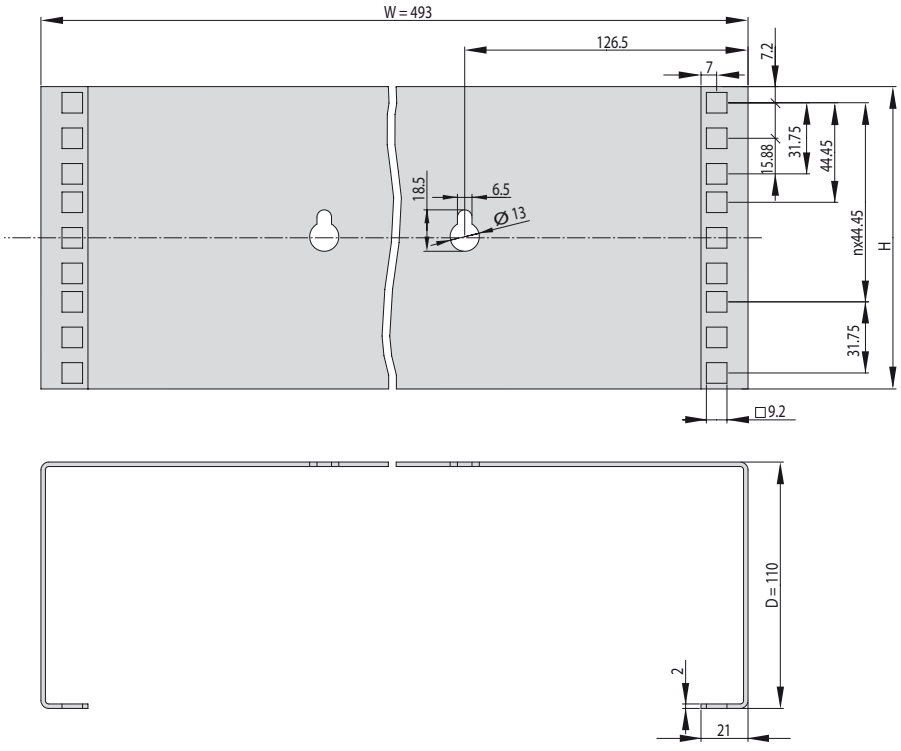

REFERENCE CHART

Total width W [mm]	Total depth D [mm]	Total height H [mm]	Usable height [U = 44.45 mm]	Maximum load capacity [kg]	Catalogue number
493	110	134	3 U	10	WZ-2522-02-03-011
		90	2 U	6	WZ-2522-02-02-011
		45	1 U	3	WZ-2522-02-01-011

WALL-MOUNTED NETWORK FRAME RNO 19"

INTENDED FOR LIGHT EQUIPMENT WHICH DOES NOT REQUIRE FULL ENCLOSURE

- Simple and cheap solution for wall-mounted installation of 19" equipment.
- Left side with hinges to offer access to equipment from the rear.
- Available in 2 options of varying depth.

TECHNICAL DATA

Material:
Sheet steel

Surface finishing:
Powder paint, light grey (RAL 7035).
Application of other colours on request.

Scope of delivery:
Wall frame (1 pc.) without fixing accessories.

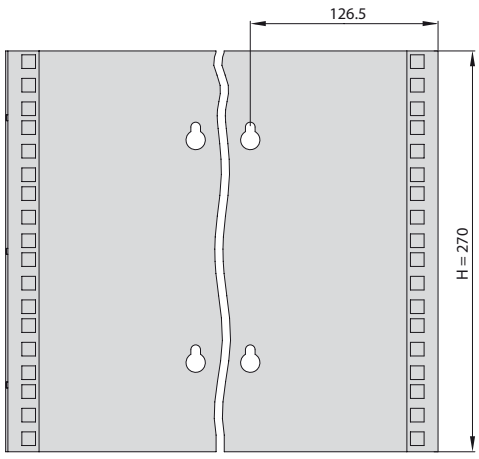

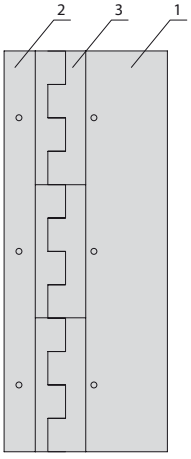

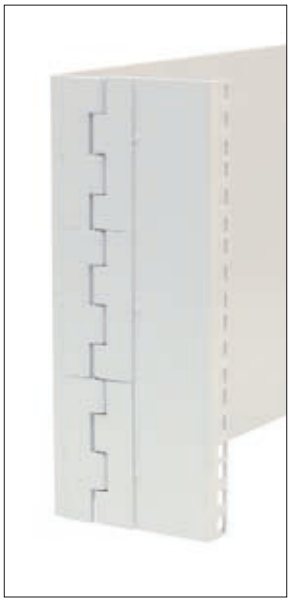

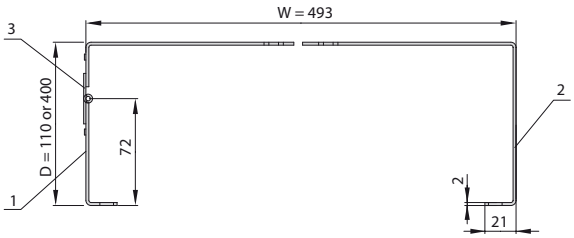

DESIGN

1. Steel plate 1
2. Steel plate 2
3. Hinge

REFERENCE CHART

Total width W [mm]	Total depth D [mm]	Total height H [mm]	Usable height [U = 44.45 mm]	Maximum load capacity [kg]	Catalogue number
493	400	270	6 U	3	WZ-2522-01-02-011
	110			6	WZ-2522-01-01-011

SUPPLEMENTARY ACCESSORIES FOR WALL-MOUNTED CABINETS

Mounting profiles, mounting angles

Mounting profiles are applied in wall-mounted cabinets when a shelf requiring four fixing points is to be installed (see page 112). In the standard configuration, SU, SD2 and SJ2 cabinets are offered with two mounting angles.

Material:
Sheet steel, Al-Zn coated

Scope of delivery:
One set consisting of two mounting angles/profiles with fixing accessories.

Product name	Length [U = 44.45 mm]	Catalogue number	Picture
Set of mounting profiles for SU, SD2, SJ2 cabinets	4 U	WZ-3839-15-01-000	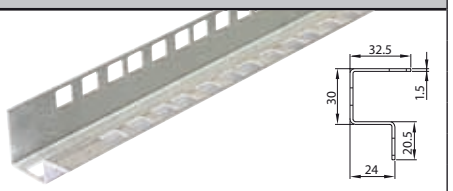
	6 U	WZ-3504-15-01-000	
	10 U	WZ-3504-15-02-000	
	12 U	WZ-3504-15-03-000	
	15 U	WZ-3504-15-04-000	
	18 U	WZ-3504-15-05-000	
Set of mounting angles for SU, SD2, SJ2 cabinets	4 U	WZ-3839-14-01-000	
	6 U	WZ-3504-14-01-000	
	10 U	WZ-3504-14-02-000	
	12 U	WZ-3504-14-03-000	
	15 U	WZ-3504-14-04-000	
	18 U	WZ-3504-14-05-000	

Package: 1 set = 2 pcs.

Brush strip for cable opening

For blinding cable openings in SU, SD2, SJ2, SJK, SKI2 cabinets following the removal of blanking plates.

Material:
Plastic

Scope of delivery:
Brush strip, 250 mm long. Before fixing in SJK or SKI2 cabinets, the brush strip must be shortened.

Package	Catalogue number
1 pc.	WZ-3504-22-00-000

SUPPLEMENTARY ACCESSORIES FOR WALL-MOUNTED CABINETS

Mounting plate

Fixed on mounting angles or mounting profiles in 19" spacing.

Material:
Al-Zn coated sheet steel

Scope of delivery:
Mounting plate with fixing accessories.

Height [U = 44.45 mm]	Catalogue number
4 U	WZ-0750-10-01-000
6 U	WZ-0750-10-02-000
10 U	WZ-0750-10-03-000
12 U	WZ-0750-10-04-000
15 U	WZ-0750-10-05-000
18 U	WZ-0750-10-06-000

Package: 1 pc.

Mounting plate to be fixed on mounting profiles

Fan kit for SU, SD2, SJ2, SJB cabinets

Mounted it the top or bottom plate of SU, SD2 and SJ2 cabinets. Power supply: 230 V, 50 Hz; power: 22 W; capacity: 165 m^3/h.; noise level: ca 40 dB

Scope of delivery:
Set: 1 fan with protection grid, power lead 1.0 m long, fixing accessories.

Package	Catalogue number
1 pc.	WN-0200-04-00-000

Fan kit for SU, SD2, SJ2, SJB cabinets

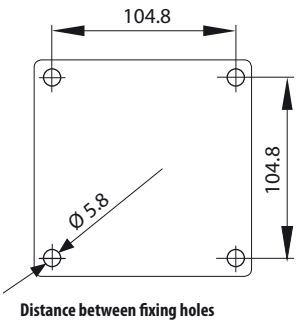

Distance between fixing holes

SUPPLEMENTARY ACCESSORIES FOR WALL-MOUNTED CABINETS

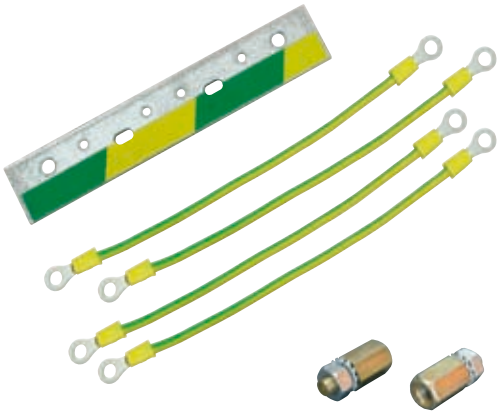

Earthing elements

Earthing elements for SU, SD2, SJ2, SJB cabinets

Earthing strip
- Fixed to the bottom plate of the cabinet by means of screws.
- With threaded M5 openings for fixing ducts.
- Material: zinc coated steel bar 30 x 4 x 170 mm

Earthing cables
- Insulated copper cables with contact eyes for M5 screws.
- Material: copper wires, 6 mm^2 in diameter

Scope of delivery:
Earthing elements are supplied with fixing accessories for installation inside the cabinet.

Product name	Package	Catalogue number
Earthing strip for SD2, SJ2, SJB cabinets	1 pc.	WZ-3504-16-00-000
Earthing set for SU cabinet: - earthing strip with a set of fixing spacer bolts - 1pc. - earthing cable, 200 mm long - 4 pcs.	1 set	WZ-2733-13-00-000

Cross profile for cable fixing

Cross profile

Intended for fixing cables in SU, SD2, SJ2 wall mounted cabinets.
Horizontally mounted to the rear wall of the cabinet.

Material:
Al-Zn coated sheet steel

Scope of delivery:
Cross profile with fixing accessories.

Package	Catalogue number
1 pc.	WZ-2048-24-01-000

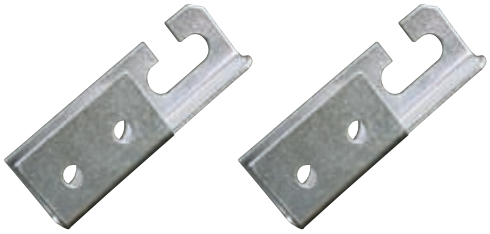

Wall-fastening brackets

Wall-fastening brackets

Fixed to openings in the rear wall of SU, SD2, SJ2 wall mounted cabinets. For one cabinet it is necessary to use 4 brackets of the same depth. Cabinets can also be fastened directly to the wall without using brackets.

Material:
Zinc-coated sheet steel

Scope of delivery:
Set of 4 brackets with screws, washers and nuts for fixing the cabinet to the wall.

Product name	Package	Catalogue number
Brackets 20 mm deep	1 set. = 4 pcs.	WZ-2048-50-01-000
Brackets 40 mm deep	1 set. = 4 pcs.	WZ-2048-50-02-000

OPEN RACKS

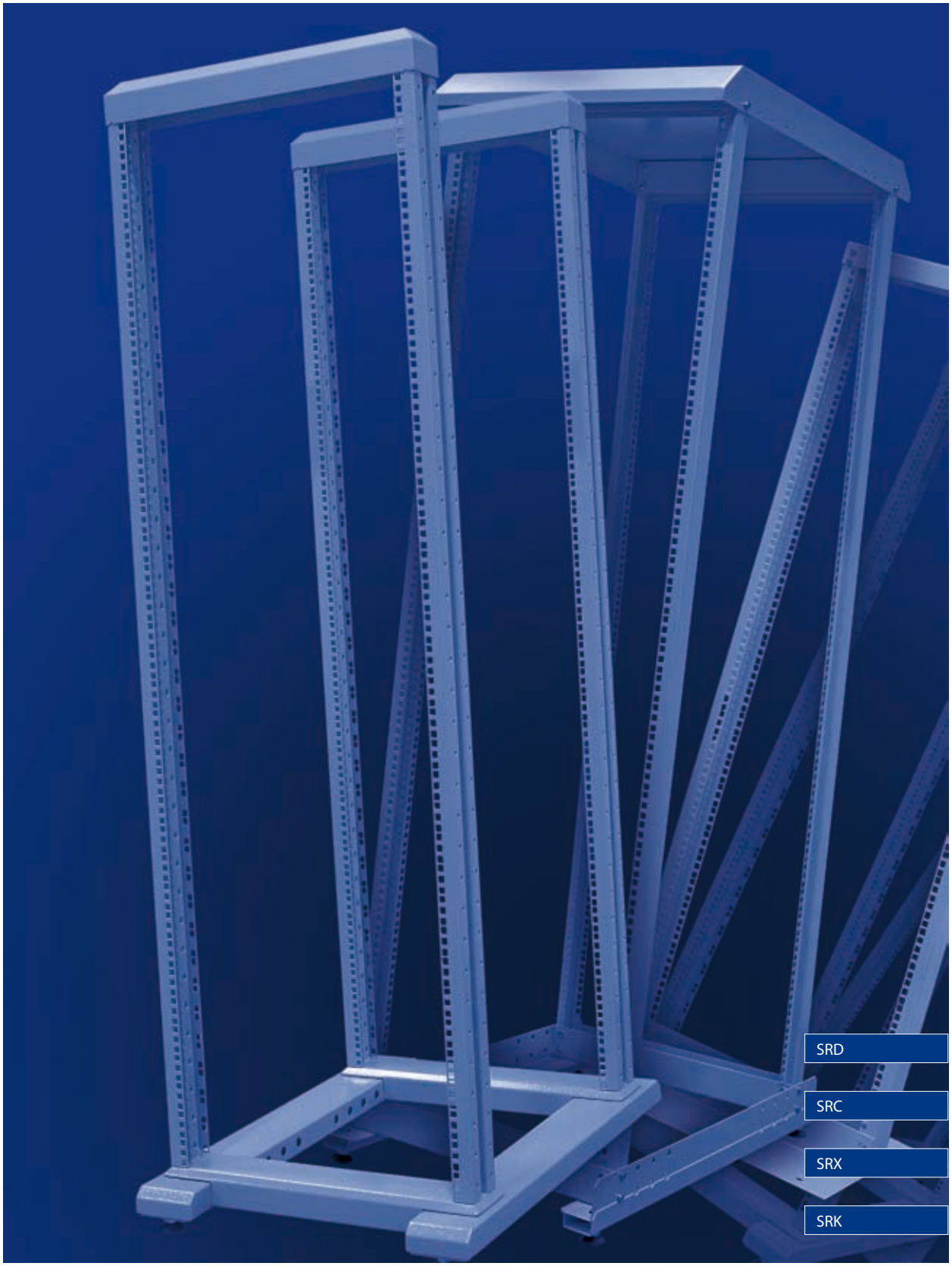

SRD 19" OPEN RACK

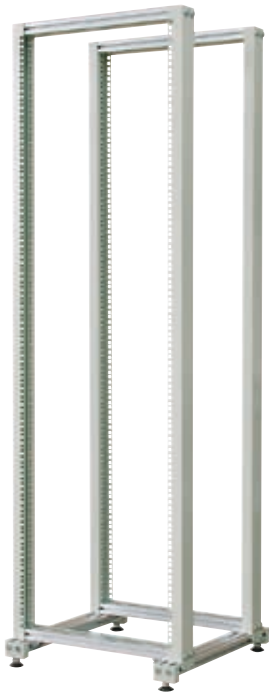

OPEN RACK WITH FULLY ADJUSTABLE 19" RACK FRAMES

- Modular design based on horizontal aluminium profiles and vertical steel posts.
- Open racks are set on levelling feet.
- Various supplementary accessories are available as for data telecom cabinets - castors, shelves, drawers, power strips etc.

REFERENCE CHART

HU [U = 44.45 mm]	H [mm]	Maximum load capacity [kg]	Catalogue number
24 U	1177	150	WZ-6170-01-05-011
36 U	1709	150	WZ-6170-01-06-011
42 U	1975	150	WZ-6170-01-07-011
45 U	2109	150	WZ-6170-01-08-011

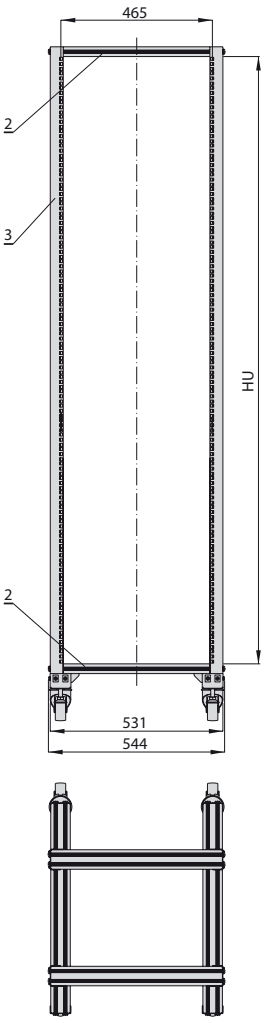

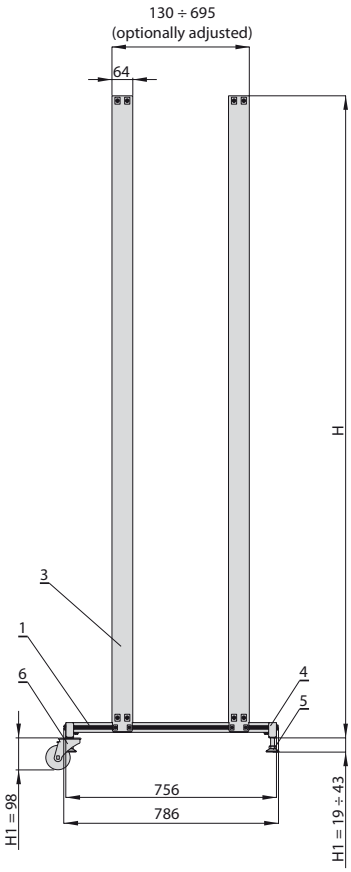

TECHNICAL DATA

Material:
Sheet steel,
aluminium profile
60 x 30 mm

Surface finishing:
Powder paint, light grey (RAL 7035).
All other colour options on request.

DESIGN

1. Base profile
2. Cross profile
3. Rack's post
4. Chassis of levelling feet or castors
5. Levelling feet

Supplementary accessories:
6. Castors (see page 106)

OPEN RACK SRC 19"

SINGLE-FRAME OPEN RACK

- The design is based on a single assembled 19" frame fixed by screws to two steel mounting angles forming the base.
- Chassis has openings to brace the rack to the floor.
- Optionally the rack can be equipped with wall-fastening brackets.
- Possibility to use some supplementary accessories as for data telecom cabinets: shelves, drawers, power strips etc.

REFERENCE CHART

HU [U = 44.45 mm]	H [mm]	Maximum load capacity [kg]	Catalogue number
31 U	1496	100	WZ-0008-01-01-011
45 U	2119	100	WZ-0008-01-03-011
54 U	2519	100	WZ-0008-01-04-011

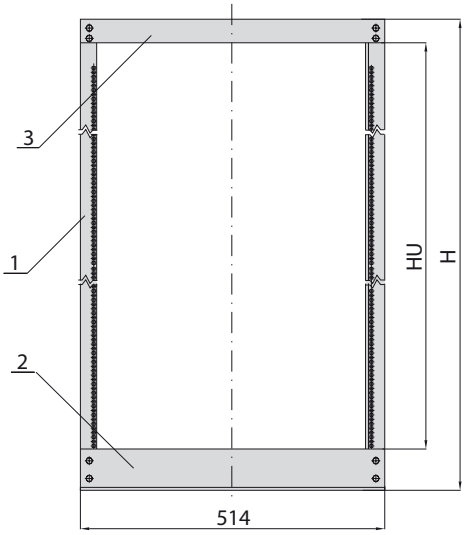

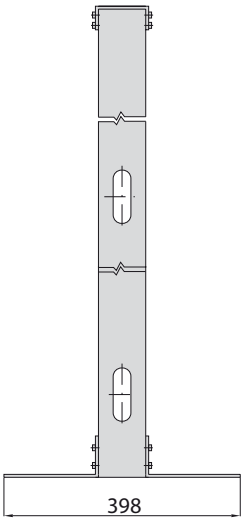

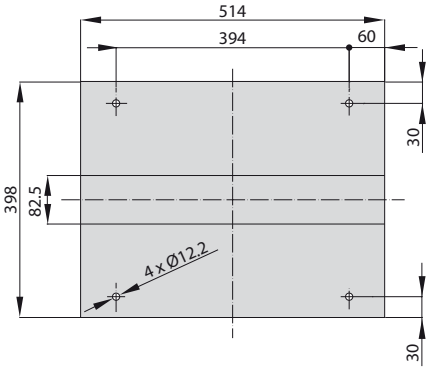

DESIGN

1. Vertical post
2. Chassis
3. Cross profile

TECHNICAL DATA

Material:
Sheet steel

Surface finishing:
Powder paint, light grey (RAL 7035).
All other colour options on request.

SRX 19" OPEN RACK

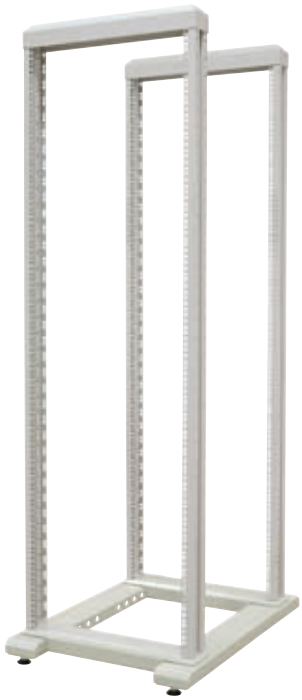

OPEN RACK WITH STEP ADJUSTABLE 19" RACK FRAMES

- Made of two 19" welded frames that are fastened to the doublepart chasis with screws.
- Positioning of the frames is based on a 50 mm pitch pattern.
- Standard rack is placed on levelling feet.
- Possibility for using some elements of supplementary equipment for data telecom cabinets – castors, shelves, drawers, power strips etc.

REFERENCE CHART

HU [U = 44.45 mm]	H [mm]	Maximum load capacity [kg]	Catalogue number
24 U	1185	250	WZ-6026-01-01-011
36 U	1719	250	WZ-6026-01-02-011
42 U	1985	250	WZ-6026-01-04-011
45 U	2119	250	WZ-6026-01-05-011

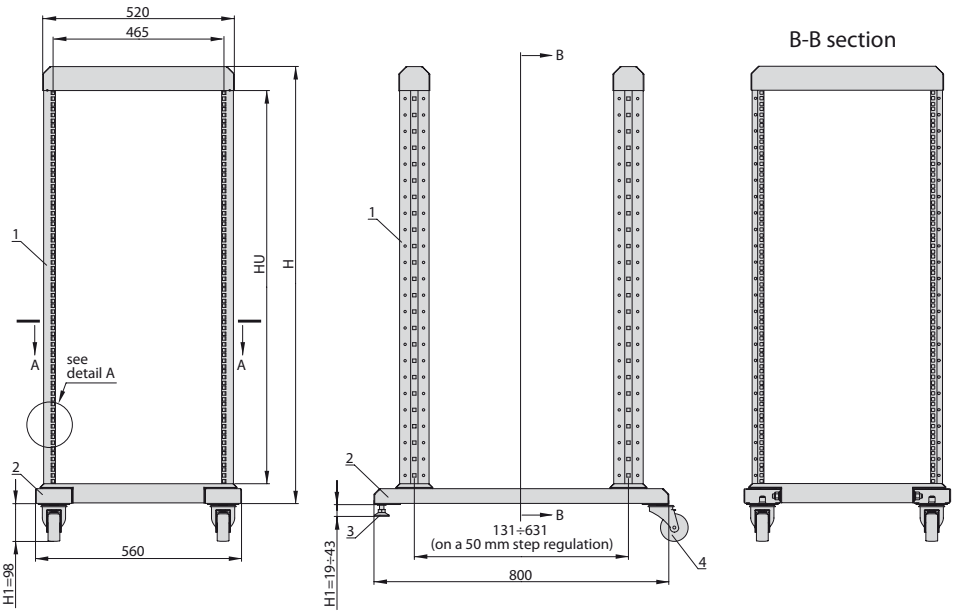

TECHNICAL DATA

Material:
Sheet steel

Surface finishing:
Powder paint, light grey (RAL 7035).
All other colour options on request.

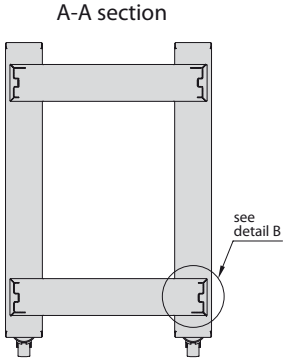

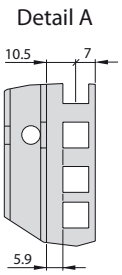

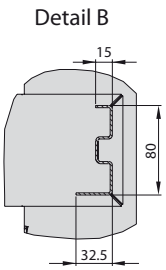

DESIGN

1. 19" welded frame
2. Rack base
3. Levelling feet

Supplementary accessories:
4. Castors (see page 106)

Set of fasteners for SRX open rack

For interconnecting upper parts of 19" frames in order to stiffen the rack.

Material:
Sheet steel, Al-Zn coated

Scope of delivery:
Set of 2 adjustable fasteners with fixing accessories.

Package	Catalogue number
1 set	WZ-2493-11-00-000

Roof for SRX rack

For protection of equipment installed in open racks and to strengthen the structure.

Material:
Sheet steel powder painted in RAL 7035.

Scope of delivery:
Roof with fixing accessories.

Package	Catalogue number
1 pc.	WZ-6026-10-00-011

SRK 19" OPEN RACK

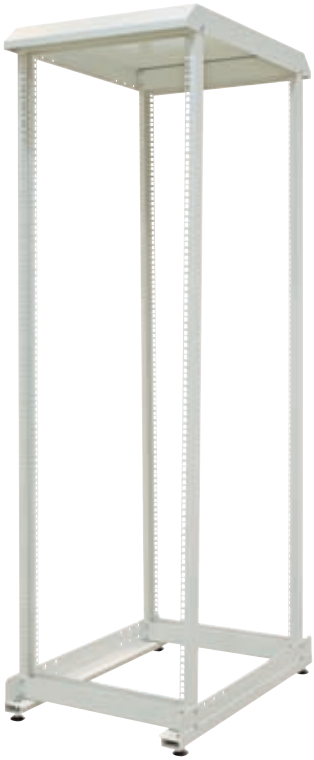

OPEN RACK WITH STEP ADJUSTABLE 19" RACK FRAMES

- The design consists of two screwed 19" frames which are fixed to two strengthened mounting angles forming the base.
- The distance of the frames can be changed by positioning at 50 mm steps.
- In the standard version the open rack is set on four adjustable feet.
- Roof and connectors for joining upper parts of both 19" frames can be ordered as supplementary accessories.
- Possibility to use some supplementary accessories as for data telecom cabinets: castors, shelves, drawers, power strips etc.

REFERENCE CHART

HU [U = 44.45 mm]	H [mm]	Maximum load capacity [kg]	Catalogue number
24 U	1190	110	WZ-6171-01-24-011
36 U	1724	110	WZ-6171-01-36-011
42 U	1990	110	WZ-6171-01-42-011
45 U	2124	110	WZ-6171-01-45-011

TECHNICAL DATA

Material:
Sheet steel

Surface finishing:
Powder paint,
light grey (RAL 7035).
Application of other colours on request.

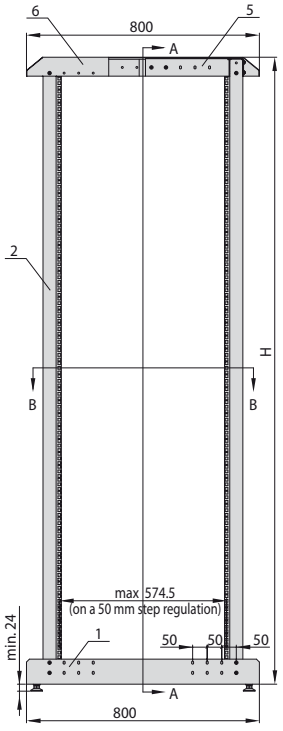

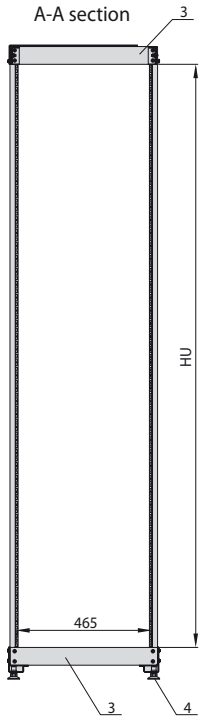

DESIGN

1. Base
2. Post
3. Cross profile
4. Adjustable feet

Supplementary accessories:
5. Connectors
6. Roof

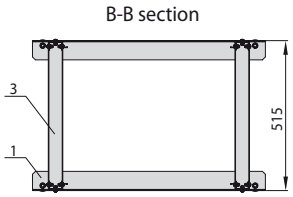

Universal set of fasteners for SRK open rack

For interconnecting upper parts of 19" frames in order to stiffen the rack.
Depending on the distance between the frames, 287 mm and 383 mm or 287 mm and 283 mm long fasteners are used.

Material:
Sheet steel powder painted in RAL 7035.

Scope of delivery:
Set of 3 pairs of connectors with fixing accessories. The connectors are 283, 287 or 383 mm long.

Package	Catalogue number
1 set	WZ-2378-19-00-011

Roof for SRK open rack

For protection of equipment installed in open racks and to strengthen the structure.

Material:
Sheet steel powder painted in RAL 7035.

Scope of delivery:
Roof with fixing accessories.

Package	Catalogue number
1 pc.	WZ-6171-04-00-011

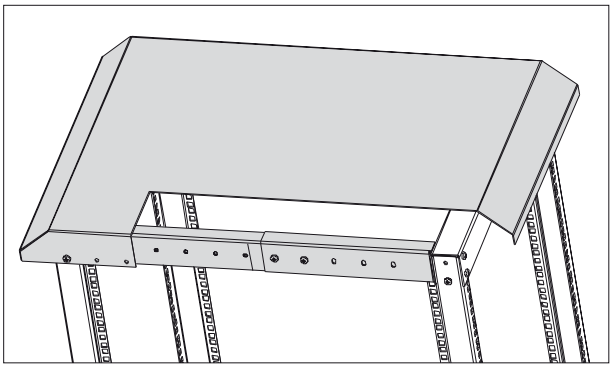

Way of connecting frames of SRK open rack and roof mounting

ACCESSORIES FOR CABINETS AND OPEN RACKS

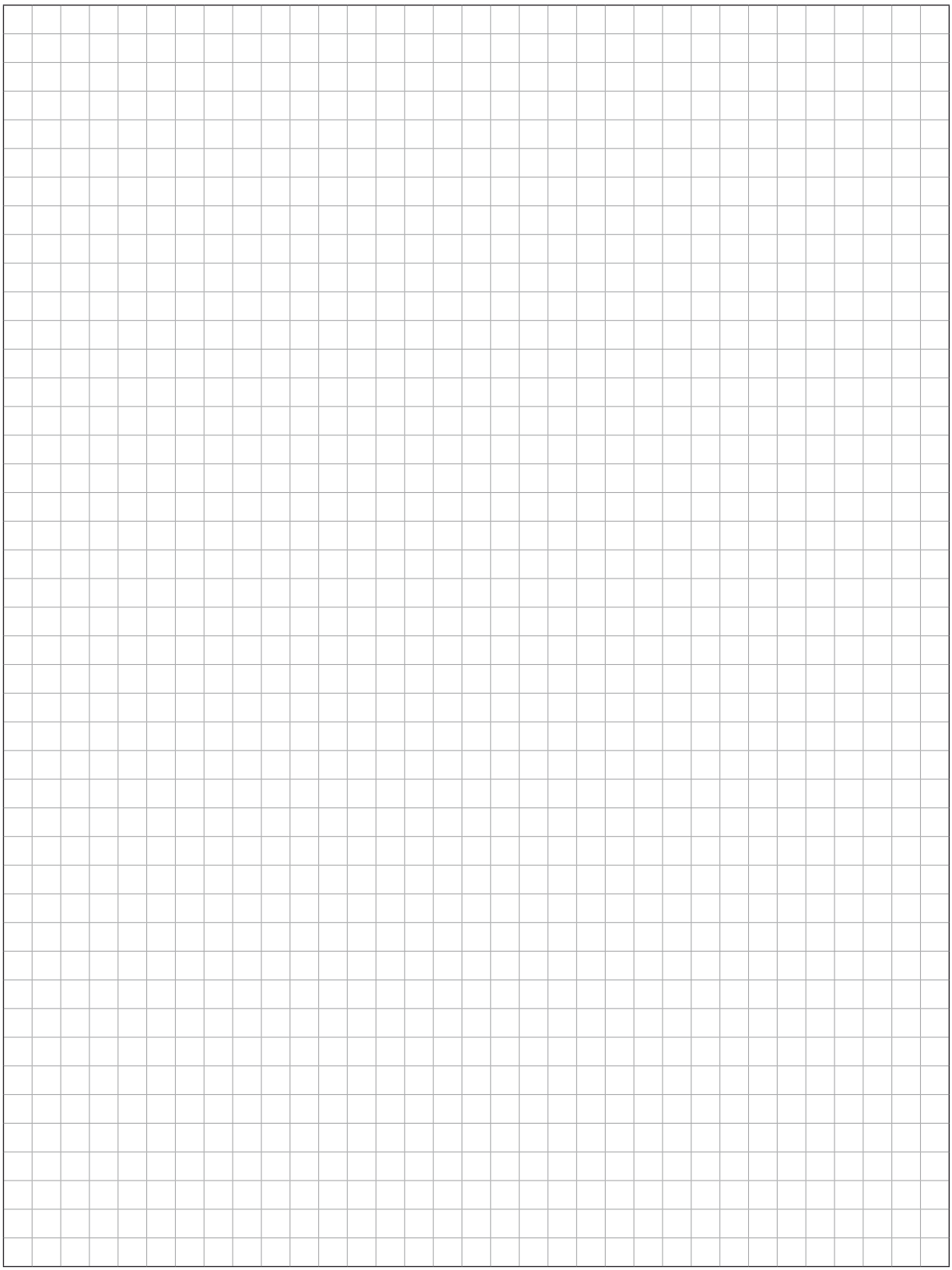

ACCESSORIES FOR CABINETS AND OPEN RACKS

ACCESSORIES FOR CABINETS AND OPEN RACKS

ACCESSORIES FOR CABINETS AND OPEN RACKS

BASE

Simple plinth 200 mm high with solid covers

Simple plinth

- For cabinets: SZB, OTS1, SZB SE, DC, DSR, SZBk.
- Possibility of fixing into the room's floor.
- Possibility of adding rubber vibro-shock absorbers.
- It consists of the following elements ordered separately:
  - Plinth 100 mm high:
    4 simple corners 100 mm high, 4 side panels (each may be solid, perforated or with brush opening), 4 vibro-shock absorbers (option).
  - Plinth 200 mm high:
    4 simple corners 200 mm high, 8 side panels (each may be solid, perforated or with brush opening), 4 vibro-shock absorbers (option).

100 mm plinth with perforated cover at the front and cover with brush opening at the rear

Plinth with levelling option

- For cabinets: SZB, OTS1, SZB SE, DC, DSR, SZBk.
- Levelling by means of feet.
- It consists of the following elements ordered separately:
  - Plinth 100 mm high:
    4 corners 100 mm high with levelling option (with feet), 4 side panels (each may be solid, perforated or with brush opening).
  - Plinth 200 mm high:
    4 corners 200 mm high with levelling option (with feet), 8 side panels (each may be solid, perforated or with brush opening).

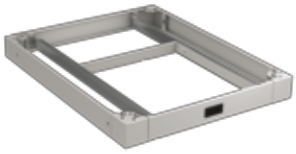

Plinth with pull out stabiliser, 100 mm high

Plinth with pull out stabiliser

- For cabinets: OTS1, SZB SE, DC.
- Equipped with a stabiliser that protects the cabinet from tipping during the ejection of servers or other heavy devices installed on moving guides.
- Used where the cabinet cannot be attached to the floor.
- It consists of the following elements ordered separately:
  - Plinth 100 mm high:
    4 simple corners 100 mm high, 3 side panels (each may be solid, perforated or with brush opening), 1 assembly consisting of pull out stabiliser.
  - Plinth 200 mm high:
    4 simple corners 200 mm high, 7 side panels (each may be solid, perforated or with brush opening), 1 assembly consisting of pull out stabiliser.

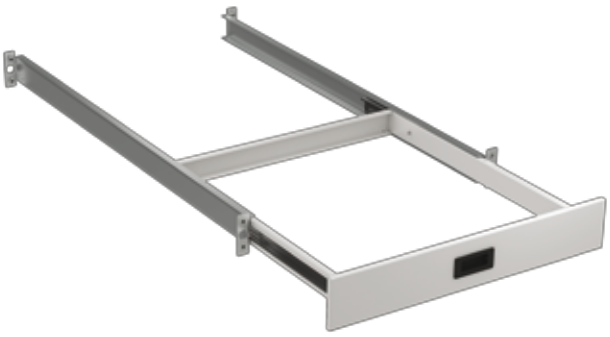

Assembly consisting of pull out stabiliser

It consists of a stabiliser with two guides.
The assembly height is 100 mm.
It can also be used for 200 mm plinths.

Material:
Stabiliser - sheet steel, powder painted in light grey (RAL 7035) or black (RAL 9005).
Guides - sheet steel Al-Zn coated

Scope of delivery:
Assembly consisting of pull out stabiliser with fixing accessories.

For plinth		Catalogue number	
width [mm]	height [mm]	RAL 7035	RAL 9005
800	1000	WZ-1718-A9-01-011	WZ-1718-A9-01-161
600	1000	WZ-1718-A9-02-011	WZ-1718-A9-02-161

Package: 1 kpl.

Plinth side panels

There are three types of plinth side panels available - see the picture. Each type has the standard height of 99 mm. Side panels can be removed even when the cabinet is loaded with equipment.

Material:
Sheet steel, powder painted in light grey (RAL 7035) or black (RAL 9005).

Scope of delivery:
Panel with fixing accessories.

Solid side panel

Perforated side panel

Side panel with brush opening

Product name	Length of side panel [mm]	Length of plinth's side [mm]	Catalogue number	
			RAL 7035	RAL 9005
Solid side panel	800	1000	WZ-1982-03-08-011	WZ-1982-03-08-161
	600	800	WZ-1982-03-07-011	WZ-1982-03-07-161
	400	600	WZ-1982-03-05-011	WZ-1982-03-05-161
Perforated side panel	800	1000	WZ-1982-05-08-011	WZ-1982-05-08-161
	600	800	WZ-1982-05-07-011	WZ-1982-05-07-161
	400	600	WZ-1982-05-05-011	WZ-1982-05-05-161
Side panel with brush opening	800	1000	WZ-1982-04-08-011	WZ-1982-04-08-161
	600	800	WZ-1982-04-07-011	WZ-1982-04-07-161
	400	600	WZ-1982-04-05-011	WZ-1982-04-05-161

Package: 1 pc.

Plinth corners

They are available in two types:
- Simple corners – they can be fixed to the room's floor and provided with rubber vibro shock absorbers.
- Corners with levelling option – with feet.

Material:
Corners: sheet steel powder painted in light grey (RAL 7035).
Levelling feet: see page 108.

Scope of delivery:
Set of 4 corners include fixing accessories for plinth side panels and assembling a plinth to the cabinet. Corners with levelling option are delivered with adjustable feet.

Simple corners

Corners with levelling option

Product name	Height [mm]	Pack-age	Catalogue number	
			RAL 7035	RAL 9005
Set of 4 simple corners	200	1 set	WZ-2174-05-02-011	WZ-2174-05-02-161
	100	1 set	WZ-1982-08-02-011	WZ-1982-08-02-161
Set of 4 corners with levelling option	200	1 set	WZ-2402-05-02-011	WZ-2402-05-02-161
	100	1 set	WZ-2401-05-02-011	WZ-2401-05-02-161

ACCESSORIES FOR CABINETS AND OPEN RACKS

BASE

Vibro-shock absorber

Vibro-shock absorbers

The simple plinths can be optionally equipped with vibroshock absorbers.
Plinth with vibro-shock absorbers should be fixed into the room's floor. Four vibro-shock absorbers are needed for one plinth.

Material:
10 mm thick rubber

Scope of delivery:
Vibro-shock absorber (1 pc.) without fixing accessories.

Package	Catalogue number
1 pc.	M1Z-00-0048

Corner with vibro-shock absorber

Locking castor 150

Castors 150

For cabinets: SZB, OTS1 as well as for open racks: SRD, SRK, SRX.
One cabinet or open rack requires 2 locking and 2 nonlocking castors.
Maximum load capacity of 4 castors: 400 kg*

Scope of delivery:
Single castor with screws and washers for fixing into the cabinet or rack.

Product name	Package	Catalogue number
Locking castor 150	1 pc.	WZ-SB72-00-01-000
Non-locking castor 150	1 pc.	WZ-SB72-00-02-000

Non-locking castor 150

* Applicable to castors only.
Loading capacity of the cabinet (or open rack) is specified in the description.

Castors 300

For cabinets: SZB, OTS1, SZB SE.
One cabinet requires 2 locking, 2 non-locking castors and 2 strenghtening bars. One bar with locking castors is fixed at the cabinet's front, and the other bar with non-locking castors at the rear.

Maximum load capacity of 4 castors: 600 kg*

Surface finishing:
Strenghtening bar for castors - powder painted light grey (RAL 7035).

Scope of delivery:
These are available as individual elements:
- castors with screws and washers for fixing into the strenghtening bar,
- supporting bar for castors with screws and washers for fixing into the bottom plate of the cabinet.

Locking castor 300 steering type

Non-locking castor 300 fixed type

Product name		Package	Catalogue number
Locking castor 300 steering type		1 pc.	WZ-SB73-00-01-000
Non-locking castor 300 fixed type		1 pc.	WZ-SB73-00-02-000
Strenghtening bar for cabinet's width	600 mm	1 pc.	WZ-SB74-00-01-011
	800 mm	1 pc.	WZ-SB74-00-02-011

* Applicable to castors only. Loading capacity of the cabinet is specified in the description.

Strenghtening bar for castors 300

Castors set for SZE2 PC cabinet

Assembling castors to the cabinet by means of two strengthening bars as in castors 300.
Loading capacity: 600 kg*

Surface finishing:
Strengthening bar for castors - powder paint light grey (RAL 7035).

Scope of delivery:
2 strengthening bars, 2 locking castors, 2 non-locking castors, mounting elements.

Product name	Package	Catalogue number
Castors set for SZE2 PC cabinet	1 set	WZ-3004-11-00-011

* Applicable to castors only. Loading capacity of the cabinet is specified in the description.

Castors set for SZE2 PC cabinet

ACCESSORIES FOR CABINETS AND OPEN RACKS

BASE

Levelling feet for cabinets and racks

Levelling feet

Levelling feet for cabinets and racks.
Thread: M12x38
Ways of adjustment:
- with 19 mm open ended spanner,
- with 5 mm wrench spanner (imbus).

Material:
Adjustable screw – zinc-coated steel
Base - plastic

Scope of delivery:
Adjustable feet with lock nuts
- set of 4 pcs.

Package	Catalogue number
1 set	WZ-5571-42-00-000

Glass door

For SZB, OTS1, SZB SE, SZB DO cabinets.

Equipped with single-point locks.

Material:
Safety glass

Scope of delivery:
Complete door with locks and hinges

For cabinet		Catalogue number
Height	Width	
42 U	800	WZ-SB02-00-02-000
	600	WZ-SB02-00-14-000
24 U	800	WZ-SB02-00-08-000
	600	WZ-SB02-00-20-000

Package: 1 pc.

Steel rear, shortened door with 3U module panel

For SZB, OTS1, SZB SE, SZB DO cabinets.
Equipped with single-point locks and 3 U module panel with a brush strip, for assembly under or above the door.

Material:
Sheet steel, powder painted in light grey (RAL 7035).

Scope of delivery:
Complete door with lock, hinges and 3U module panel with a brush strip.

For cabinet		Catalogue number
Height	Width	
42 U	800	WZ-3503-09-04-011-3U
	600	WZ-3503-09-27-011-3U
24 U	800	WZ-3503-09-19-011-3U
	600	WZ-3503-09-42-011-3U

Package: 1 pc.

ACCESSORIES FOR CABINETS AND OPEN RACKS

DOORS AND SIDE PANELS

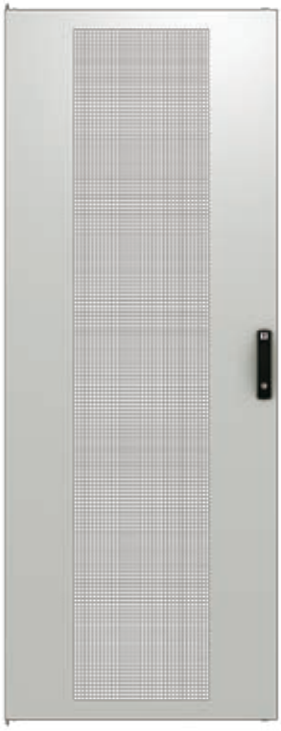

Door with perforation type B (69% clearance) for cabinet 800 mm wide

Door with perforation type C (80% clearance) for cabinet 600 mm wide

Perforated steel door

For SZB, OTS1, SZB SE, SZB DO cabinets.
With perforations with 69% clearance (type B) or 80% clearance (type C) - see page 52.
Equipped with a rod lock with swing handle.

Material:
Sheet steel, powder painted in light grey (RAL 7035) or black (RAL 9005).

Scope of delivery:
Complete door with lock and hinges.

Door type	For cabinet		Catalogue number	
	Height	Width	RAL 7035	RAL 9005
Door with perforation type B (69% clearance)	42 U	800	WZ-5205-82-05-011	WZ-5205-82-05-161
		600	WZ-5205-82-06-011	WZ-5205-82-06-161
	24 U	800	WZ-5205-82-17-011	WZ-5205-82-17-161
		600	WZ-5205-82-18-011	WZ-5205-82-18-161
Door with perforation type C (80% clearance)	42 U	800	WZ-1718-82-05-011	–
		600	WZ-1718-82-06-011	–

Package: 1 pc.

Solid side panels, 2 pc.

For OTS1, SZB SE, SZB DO cabinets
with a depth of 1000 mm.
Equipped with two single-point locks.

Material:
Sheet steel, powder painted in light grey (RAL 7035) or black (RAL 9005).

Scope of delivery:
Two solid panels with locks and bolts for mounting in the cabinet.

For cabinet		Catalogue number	
Height	Depth	RAL 7035	RAL 9005
42 U	1000	WZ-3503-11-07-011-2SZT	WZ-3503-11-07-161-2SZT
24 U	1000	WZ-3503-11-67-011-2SZT	WZ-3503-11-67-161-2SZT

Package: 2 pcs.

Shelves fixed on two 19" mounting profiles - 19" assembly

Available in fixed and pull-out version.

Material:
Sheet steel powder painted in light grey (RAL 7035) or black (RAL 9005)

Scope of delivery:
Fixed or pull out shelf with fixing accessories.

Fixed shelf II/2U

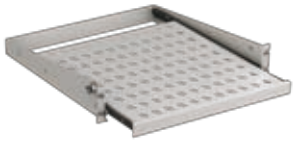

Pull out shelf II/2U

Fixed shelf II/1U

Product name	Usable dimensions			Load capacity* [kg]	Catalogue number	
	Height [U = 44.45 mm]	Width [mm]	Depth [mm]		RAL 7035	RAL 9005
Fixed shelf II/2U	2 U	446	650	25	WZ-SB00-49-01-011	WZ-SB00-49-01-161
			550	25	WZ-SB00-49-02-011	WZ-SB00-49-02-161
			450	25	WZ-SB00-49-03-011	WZ-SB00-49-03-161
			350	25	WZ-SB00-49-04-011	WZ-SB00-49-04-161
			250	25	WZ-SB00-49-05-011	WZ-SB00-49-05-161
Pull out shelf II/2U	2 U	416	555	20	WZ-5841-14-01-011	WZ-5841-14-01-161
			455	20	WZ-5841-14-02-011	WZ-5841-14-02-161
			405	20	WZ-5841-14-03-011	WZ-5841-14-03-161
			355	20	WZ-5841-14-04-011	WZ-5841-14-04-161
Fixed shelf II/1U	1 U	446	350	6	WZ-5714-52-00-011	WZ-5714-52-00-161
			250	10	WZ-5714-53-00-011	WZ-5714-53-00-161

Package: 1 pc.

*) static load, superficial weight

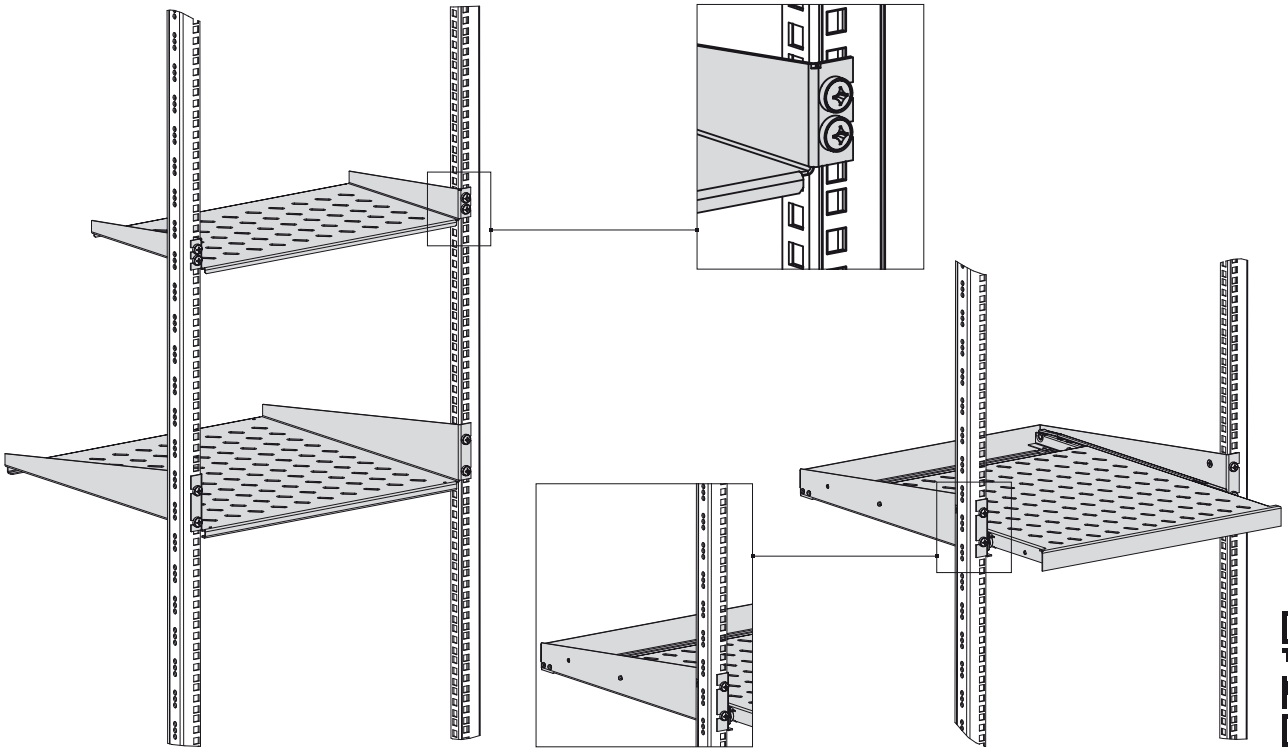

ACCESSORIES FOR CABINETS AND OPEN RACKS

SHELVES, DRAWERS, POCKETS

Fixed shelf I

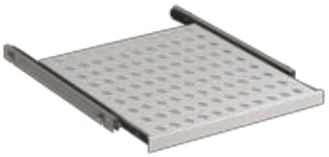

Pull out shelf I

Shelves fixed on four 19" mounting profiles - fixing to the side openings

Available in fixed and pull-out version.

Material:
Sheet steel powder painted in light grey (RAL 7035) or black (RAL 9005).

Scope of delivery:
Fixed or pull out shelf with fixing accessories.

Product name	Usable dimensions			Load capacity* [kg]	Catalogue number	
	Height [mm]	Width [mm]	Depth [mm]		RAL 7035	RAL 9005
Fixed shelf I	22	483	650	100	WZ-5841-02-01-011	WZ-5841-02-01-161
			550	100	WZ-5841-02-02-011	WZ-5841-02-02-161
			450	100	WZ-5841-02-03-011	WZ-5841-02-03-161
			350	100	WZ-5841-02-04-011	WZ-5841-02-04-161
			250	100	WZ-5841-02-05-011	WZ-5841-02-05-161
Pull out shelf I	30	416	555	25	WZ-5841-04-01-011	WZ-5841-04-01-161
			455	25	WZ-5841-04-02-011	WZ-5841-04-02-161
			405	25	WZ-5841-04-03-011	WZ-5841-04-03-161
			355	25	WZ-5841-04-04-011	WZ-5841-04-04-161

Package: 1 pc.

*) static load, superficial weight

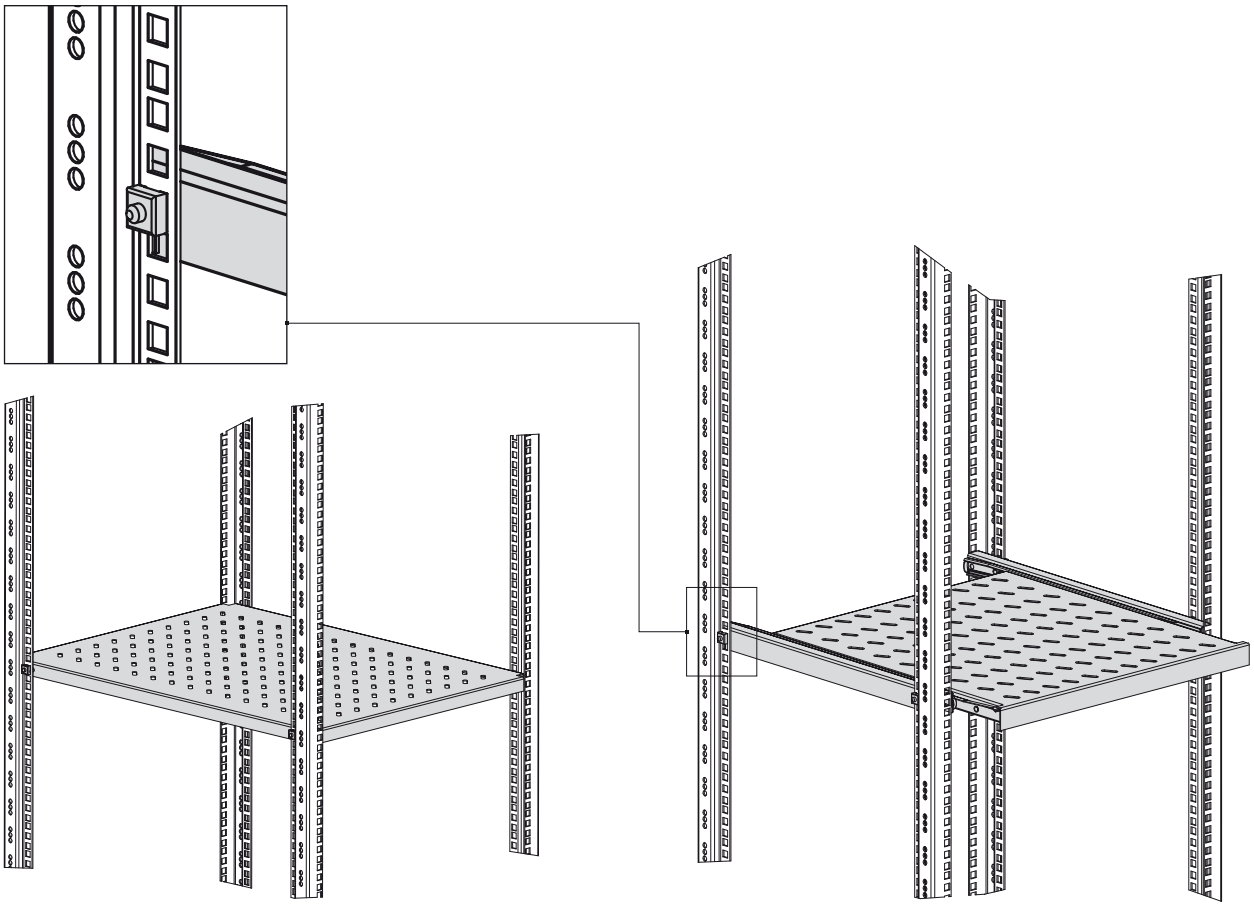

Shelves fixed on four 19" mounting profiles - adjustable depth, 19" assembly

Fixed on two pairs of 19" mounting profiles or mounting angles.

Material:
Sheet steel powder painted in light grey (RAL 7035) or black (RAL 9005)

Scope of delivery:
Shelf with fixing accessories.

Shelf with adjustable depth 1 U, 500-900 mm

Shelf with adjustable depth 1 U, 350-600 mm

Product name	Usable dimensions			Load capacity* [kg]	Catalogue number	
	Height [U = 44.45 mm]	Width [mm]	Depth [mm]		RAL 7035	RAL 9005
Shelf with adjustable depth	1 U (44 mm)	440	500-900	150	WZ-3074-83-00-011	WZ-3074-83-00-161
	1 U (44 mm)	440	350-600	150	WZ-3074-83-04-011	WZ-3074-83-04-161

Package: 1 pc.

*) static load, superficial weight

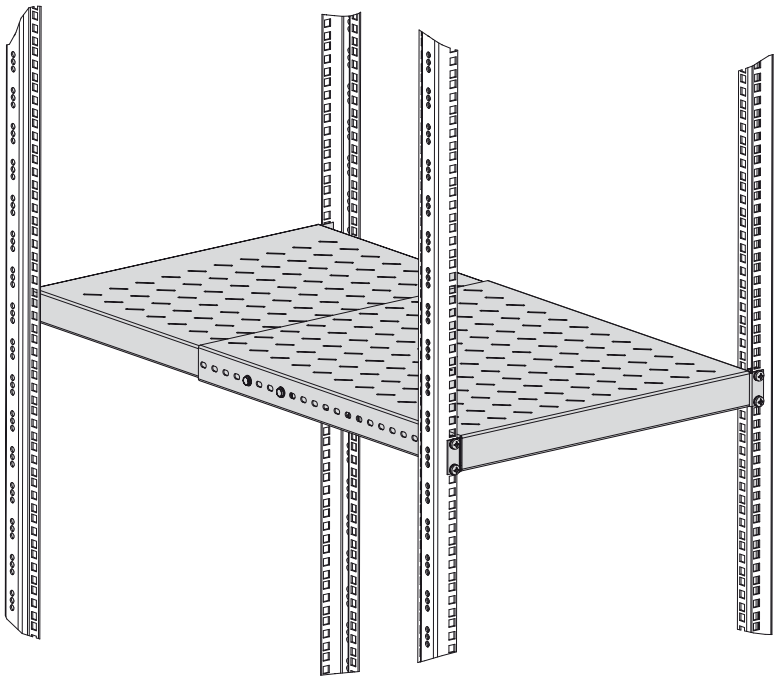

ACCESSORIES FOR CABINETS AND OPEN RACKS

SHELVES, DRAWERS, POCKETS

High-load fixed shelf

Shelves fixed on six 19" mounting profiles - fixing to the side openings

For cabinets 1000 and 1200 mm wide (OTS1, SZB SE, DC).
Available in fixed and telescopic versions.

Material:
Sheet steel powder painted in light grey (RAL 7035) or black (RAL 9005)

Scope of delivery:
Fixed or telescopic shelf with fixing accessories.

High-load telescopic shelf

Product name	Usable dimensions			Load capacity* [kg]	Catalogue number	
	Height [mm]	Width [mm]	Depth [mm]		RAL 7035	RAL 9005
High-load fixed shelf	38	483	700	200	WZ-5841-06-00-011	WZ-5841-06-00-161
High-load telescopic shelf	50 (shelf) 110 (fixing rails)	392	700	140	WZ-5841-08-00-011	WZ-5841-08-00-161

Package: 1 pc.

*) static load, superficial weight

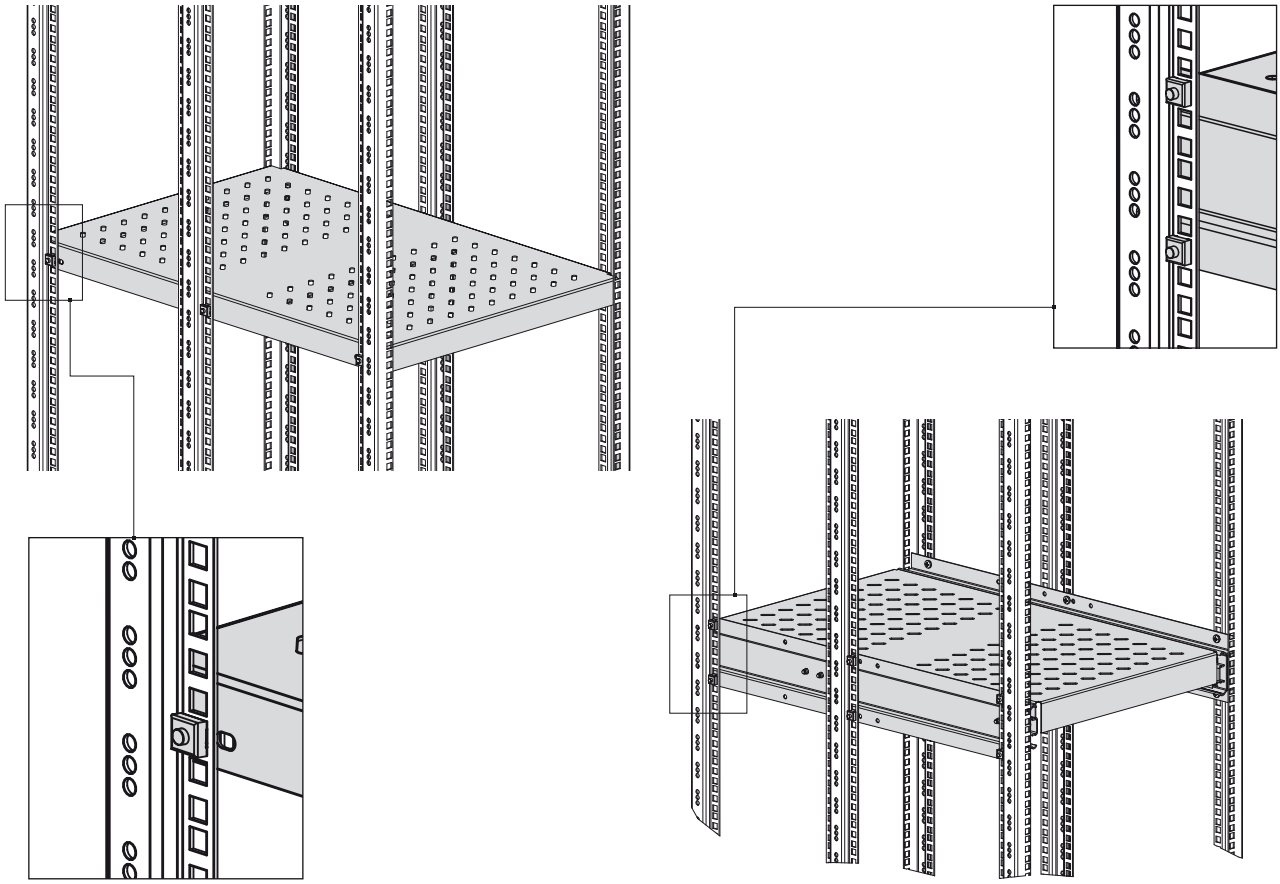

Drawer with touchpad keyboard

Drawer 19" x 1 U x 451 mm with compact touchpad keyboard.
Available with PS/2 or USB interface.
Suitable for industrial use.
Is a type of an Plug-and-Play device that does not require installation.

Material of drawer:
Sheet steel powder painted in black (RAL 9005).

Scope of delivery:
Drawer with keyboard and PS/2 or USB cable, without fixing accessories for assembling into the cabinet.

Keyboard type	Interface	Catalogue number
KBD-106TP	PS/2	T-SO-970-400
KBD-106TP-USB	USB	T-SO-970-401

Package: 1 pc.

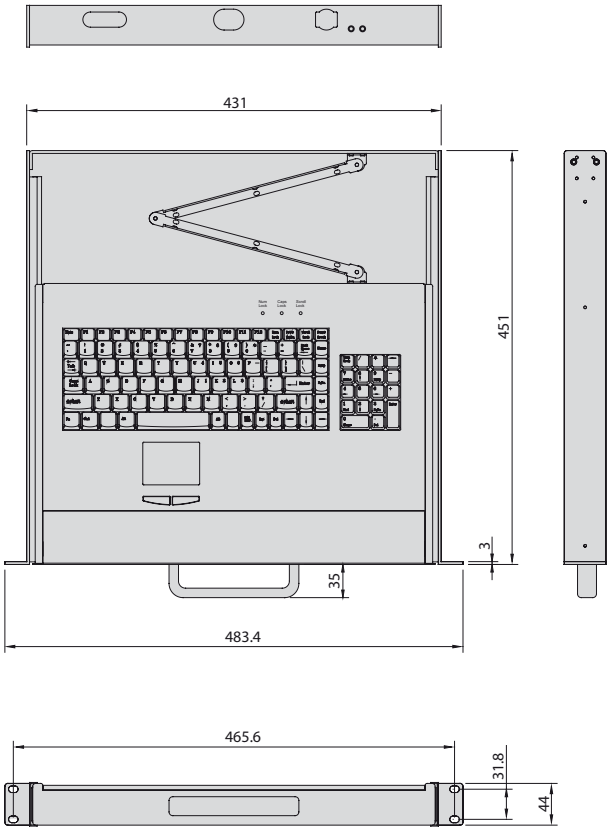

ACCESSORIES FOR CABINETS AND OPEN RACKS

SHELVES, DRAWERS, POCKETS

Drawer for keyboard

Drawer 19" x 1 U x 400 mm without keyboard.
Internal dimensions: 378 x 262 x 36 mm.
Drawer fitted with lock with cylindric insert.

Material of drawer:
Sheet steel powder painted in light grey (RAL 7035) or black (RAL 9005).

Scope of delivery:
Drawer with fixing accessories for assembling into the cabinet.

Package	Colour	Catalogue number
1 pc.	RAL 7035	WZ-SB78-00-04-011
	RAL 9005	WZ-SB78-00-04-161

Document drawer

Fitted with lock with patent insert.
19" assembly, height 2 U, depth 465 mm.
Internal dimensions: 460 x 413 x 55 mm.

Material:
Sheet steel powder painted in light grey (RAL 7035) or black (RAL 9005).

Scope of delivery:
Drawer with fixing accessories for assembling into the mounting profiles.

Package	Colour	Catalogue number
1 pc.	RAL 7035	WZ-SB67-00-00-011
	RAL 9005	WZ-SB67-00-00-161

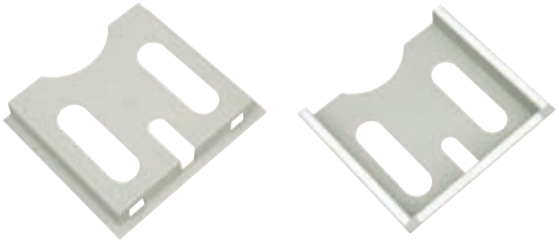

Document pocket

For fixing on the cabinet's door.
A4 size, light grey (RAL 7035) colour.

Material:
Plastic

Scope of delivery:
Pocket with self-adhesive fixing tape.

Package	Colour	Catalogue number
1 pc.	RAL 7035	WZ-SB00-40-00-011

Mounting profiles, mounting angles

For installing 19" equipment in cabinets: SZB, OTS1, SZE2 PC, SZB SE, DSR. In cabinets 600 mm wide, mounting profiles bars are fixed directly to the C-profiles; in cabinets 800 mm wide, in order to achieve 19" spacing, it is necessary to use outriggers.
Note: Mounting profiles and mounting angles for wall-mounted cabinets are described on page 92.

Material:
Al-Zn coated sheet steel

Scope of delivery:
Mounting bar or mounting angle without fixing accessories. (Fixing accessories should be ordered separately.)

19" mounting profile
19" mounting angle

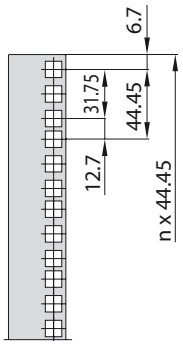

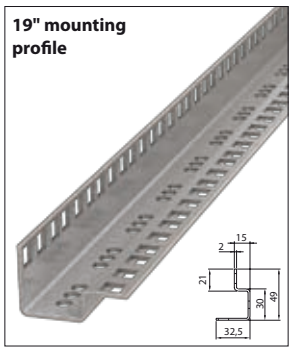

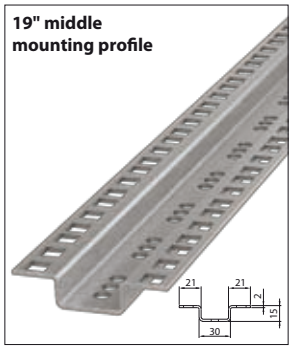

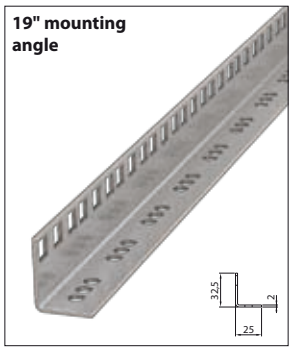

Height [U = 44.45 mm]	Catalogue number		
	19" mounting profile	19" middle mounting profile	19" mounting angle
47 U	WZ-1718-97-20-000	WZ-1718-98-13-000	WZ-SB00-30-13-000
45 U	WZ-1718-97-01-000	WZ-1718-98-01-000	WZ-SB00-30-01-000
42 U	WZ-1718-97-02-000	WZ-1718-98-02-000	WZ-SB00-30-02-000
40 U	WZ-1718-97-03-000	WZ-1718-98-03-000	WZ-SB00-30-03-000
39 U	WZ-1718-97-13-000	WZ-1718-98-14-000	WZ-SB00-30-14-000
38 U	WZ-1718-97-04-000	WZ-1718-98-04-000	WZ-SB00-30-04-000
36 U	WZ-1718-97-05-000	WZ-1718-98-05-000	WZ-SB00-30-05-000
33 U	WZ-1718-97-14-000	WZ-1718-98-15-000	WZ-SB00-30-15-000
32 U	WZ-1718-97-06-000	WZ-1718-98-06-000	WZ-SB00-30-06-000
30 U	WZ-1718-97-15-000	—	WZ-SB00-30-16-000
28 U	WZ-1718-97-07-000	WZ-1718-98-07-000	WZ-SB00-30-07-000
27 U	WZ-1718-97-16-000	—	WZ-SB00-30-17-000
24 U	WZ-1718-97-08-000	WZ-1718-98-08-000	WZ-SB00-30-08-000
21 U	WZ-1718-97-17-000	—	WZ-SB00-30-18-000
18 U	WZ-1718-97-09-000	WZ-1718-98-09-000	WZ-SB00-30-09-000
15 U	WZ-1718-97-10-000	WZ-1718-98-10-000	WZ-SB00-30-10-000
12 U	WZ-1718-97-11-000	WZ-1718-98-11-000	WZ-SB00-30-11-000
10 U	WZ-1718-97-12-000	WZ-1718-98-12-000	WZ-SB00-30-12-000

Package: 1 pc.

C-profiles

For fixing mounting profiles, mounting angles, cable ducts and cable trays in SZB, OTS1, SZB SE and DC cabinets.

Material:
Al-Zn coated sheet steel.

Scope of delivery:
Set of 2 C-profiles with fixing accessories for assembling into the cabinet.

For cabinet depth [mm]	Catalogue number
1200	WZ-5507-16-08-000
1000	WZ-5507-16-03-000
800	WZ-5507-16-02-000
600	WZ-5507-16-01-000

Package: 2 pcs.

ACCESSORIES FOR CABINETS AND OPEN RACKS

19" FRAME AND FIXING ACCESSORIES

Outrigger

For fixing mounting profiles or mounting angles in cabinets 800 mm wide, in order to achieve 19" spacing.
Depending on the cabinet design, two or three outriggers are required for assembling one mounting profile.

Material:
zamak casting

Scope of delivery:
One outrigger with fixing accessories to install the outrigger to mounting profile/angle and to C-profile.

Package	Catalogue number
1 pc.	WZ-5205-90-00-C12

Elements for fixing mounting profiles or mounting angles to C-profiles in cabinet 600 mm wide (without outrigger)

Elements for fixing appliances to the mounting profiles or mounting angles

Fixing accessories

Description of set	Package	Catalogue number
Elements for fixing mounting profiles or mounting angles to C-profiles in cabinet 600 mm wide (without outrigger): Screw M6x16 - 4 pcs Nut M6 - 4 pcs Washer - 8 pcs Toothed washer - 4 pcs	1 set	WZ-SB00-37-04-000
Elements for fixing appliances to the mounting profiles or mounting angles: Screw M6x16 - 10 pcs. Cage nut M6 - 10 pcs. Plastic washer - 10 pcs.	1 set	T1Z-00-0002

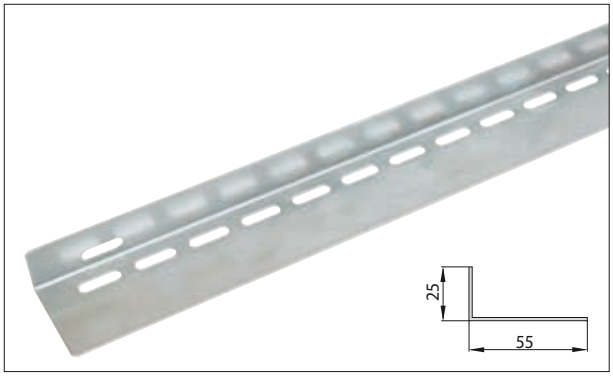

Guide bar

Fixed horizontally to the front and rear mounting profile, parallel to the cabinet's side.
For supporting appliances in the cabinet.
With holes for M6 bolts.

Material:
Zinc-coated sheet steel

Scope of delivery:
Guide bar with fixing accessories.

Length [mm]	Catalogue number
650	WZ-SB00-27-01-000
550	WZ-SB00-27-02-000
450	WZ-SB00-27-03-000
350	WZ-SB00-27-04-000
250	WZ-SB00-27-05-000

Package: 1 pc.

Cross bar

Fixed to the rear mounting profiles in 19" cabinets.
For installing cables or supporting appliances in the cabinet.
With holes for M6 bolts.

Material:
Zinc-coated sheet steel

Scope of delivery:
Cross bar with fixing accessories.

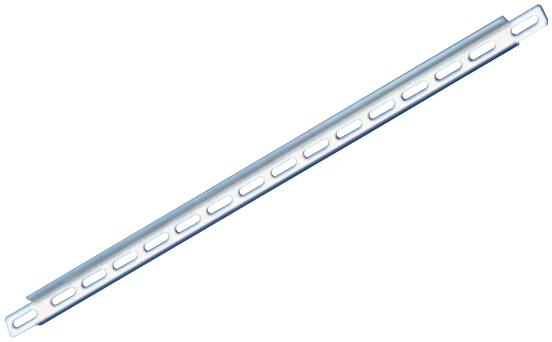

Length [mm]	Package	Catalogue number
500	1 pc.	WZ-SB00-28-01-000
335	1 pc.	WZ-SB00-28-02-000

Swing frame

For installing 19" equipment in SZB or OTS1 cabinets 800 mm wide.

Position of frame: middle
Maximum depth of appliances mounted into the frame: 350 mm
The standard design of SZB and OTS1 cabinets makes it possible to use swing frames for full usable height of the cabinet (see cabinet's heights in the chart below).
When smaller swing frames are used, it is necessary to use additional C-profiles (see page 117).

Material:
Sheet steel powder painted in light grey (RAL 7035)

Scope of delivery:
Swing frame set with fixing accessories.

SZB 42 U cabinet with a 20 U swing frame

Swing frame

SZB cabinet with a swing frame spanning the entire usable height of the cabinet

Swing frame's height [U = 44.45 mm]	For cabinet's height* [U = 44.45 mm]	Load capacity** [kg]	Catalogue number
6 U	—	16	WZ-5596-01-01-011
8 U	—	21	WZ-5596-01-02-011
10 U	15 U	26	WZ-5596-01-03-011
12 U	15 U, 18 U	32	WZ-5596-01-04-011
14 U	18 U	37	WZ-5596-01-05-011
16 U	21 U	42	WZ-5596-01-06-011
18 U	21 U, 24 U	47	WZ-5596-01-07-011
20 U	24 U	53	WZ-5596-01-08-011
22 U	27 U	58	WZ-5596-01-09-011
24 U	27 U, 30 U	63	WZ-5596-01-10-011
26 U	30 U	69	WZ-5596-01-11-011
28 U	33 U	74	WZ-5596-01-12-011
30 U	33 U, 36 U	79	WZ-5596-01-13-011
32 U	36 U	84	WZ-5596-01-14-011
34 U	39 U	90	WZ-5596-01-15-011
36 U	39 U, 42 U	95	WZ-5596-01-16-011
38 U	42 U	100	WZ-5596-01-17-011
40 U	45 U	100	WZ-5596-01-18-011

Package: 1 pc.

*) Applicable for swing frame using up full usable height.
**) Static load

ACCESSORIES FOR CABINETS AND OPEN RACKS

EARTHING ELEMENTS

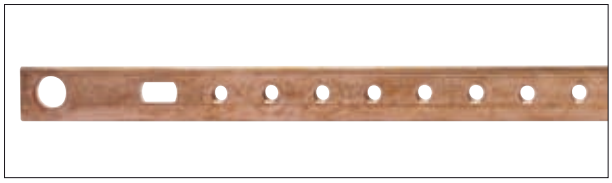

Earthing bar

Earthing bar

For free-standing cabinets.
In the following cabinets: SZB, OTS1, SZB SE and DC the earthing bar is screwed to threaded bushings placed in the bottom of the cabinet frame.
In DSR cabinet, the earthing bar is fixed onto the frame's post/profile using 2 fixing/spacer bolts.

Material:
Copper

Scope of delivery:
Earthing bar with screws for assembling in the cabinet.
Two fixing/spacer bolts for mounting the earthing bar in DSR cabinet are to be ordered separately.

Fixing/spacer bolt

Product name	Package	Catalogue number
Earthing bar Cu 15x5x375 mm	1 pc.	WZ-3393-11-00-000
Fixing/spacer bolts for mounting the earthing bar in DSR cabinet	1 pc.	WZ-2645-15-00-000

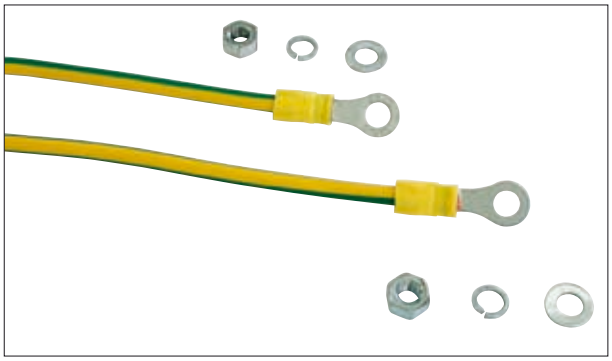

Earthing cables

Earthing cable set

Insulated copper cables for joining removable elements of the cabinet with earthing bar.
Equipped with contact eyes Ø 6 mm.

Material:
Copper cables 6 mm^2

Scope of delivery:
Earthing cables are sold in sets in accordance with the chart below.

Description of set	Package	Catalogue number
Cable 300 mm long - 4 pcs. Cable 400 mm long - 2 pcs. Cable 600 mm long - 1 pc. Fixing accessories	1 set	WZ-SB12-00-01-000
Cable 300 mm long - 2 pcs. Cable 400 mm long - 2 pcs. Cable 600 mm long - 1 pc. Fixing accessories	1 set	WZ-SB12-00-02-000

Baying bolt for cabinets: SZB, OTS1, SZB SE

For quick and easy baying SZB, SZB SE or OTS1 cabinets in rows. In order to join 2 cabinets, a total of 4 baying bolts are required.

Material:
Galvanized steel

Scope of delivery:
Baying bolt - 1 pc. with nuts and washers.

Package	Catalogue number
1 pc.	WZ-SB25-00-00-000

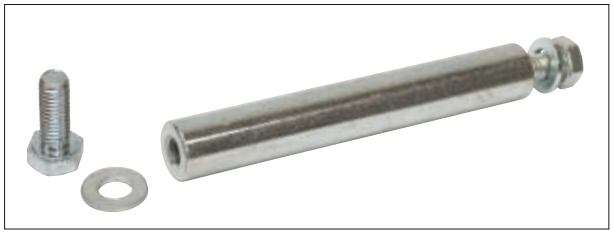

Baying bolt

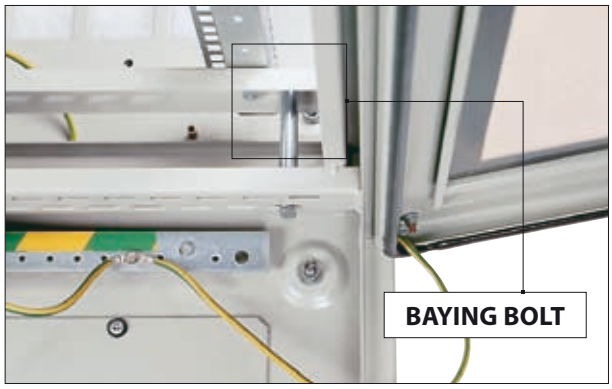

Baying of SZB cabinets

Set of elements for baying DC server cabinets

A set of elements for baying DC server cabinets with one another or baying DC server cabinets with management cabinets, side heat exchangers or row heat exchangers. One set is intended for baying two cabinets.

It consists of clamp connectors for joining cabinet frame's profiles and screws, nuts and washers for joining bottom and top plates. In order to ensure good electrical conductivity between cabinet frames, one of the screws is provided with contact washers instead of standard ones.

M8 screw with nut and flat washers

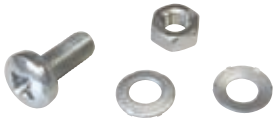

M8 screw with nut and contact washers

Clamp connector

Description of set	Package	Catalogue number
Clamp connector - 4 pcs. Screw M8 - 4 pcs. Hexagonal nut M8 - 4 pcs. Flat washer - 8 pcs. Contact washer - 2 pcs.	1 set	WZ-2565-13-02-000-DC

USE OF CLAMP CONNECTOR

Baying cabinets without side panels

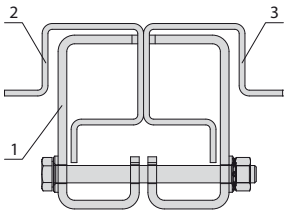

Baying cabinets with side panels

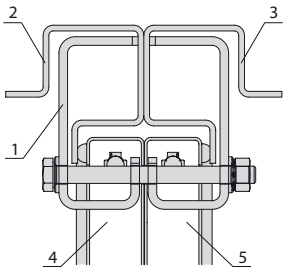

1. clamp connector, **2.** left cabinet frame's profile, **3.** right cabinet frame's profile, **4.** left cabinet side panel, **5.** right cabinet side panel

ACCESSORIES FOR CABINETS AND OPEN RACKS

LIGHTING • MAINTENANCE AND CLEANING AGENTS

Lighting kit

Lighting kit

For floor-standing and wall-mounted cabinets.
19" assembly, usable height 1 U.

Material of mounting bracket:
Sheet steel, powder painted in light grey (RAL 7035) or black (RAL 9005).

Scope of delivery:
Electric light fitting with a fluorescent lamp 230 V, 5 W and a switch, a bracket for fixing the electric light fitting on the 19" mounting profiles, power supply cable, fixing accessories. Power supply cable with a door switch is ordered separately.

Power supply cable with a door switch

Product name	Package	Colour	Catalogue number
Lighting kit without a door switch	1 set	RAL 7035	WN-0208-05-01-011
		RAL 9005	WN-0208-05-01-161
Power supply cable with a door switch	1 set	–	WN-0208-04-03-000

Spray paint

Maintenance and cleaning foam

Maintenance and cleaning agents for painted surfaces

Product name	Package	Catalogue number
Spray paint, colour RAL 7035	400 ml	M1D-01-0004
Spray paint, colour RAL 9005 matt	400 ml	M1D-01-0010
Maintenance and cleaning foam for painted surfaces	400 ml	M1N-02-0073

19" blanking plates

For covering empty 19" space.

Material:
Sheet steel or sheet aluminium powder painted in light grey (RAL 7035) or black (RAL 9005).

Scope of delivery:
Blanking plate with fixing accessories.

Height [U = 44.45 mm]	Catalogue number		
	Steel blanking plate RAL 7035	Steel blanking plate RAL 9005	Aluminium blanking plate RAL 7035
1 U	WZ-SB00-33-01-011	WZ-SB00-33-01-161	WZ-SB00-32-01-011
2 U	WZ-SB00-33-02-011	WZ-SB00-33-02-161	WZ-SB00-32-02-011
3 U	WZ-SB00-33-03-011	WZ-SB00-33-03-161	WZ-SB00-32-03-011
4 U	WZ-SB00-33-04-011	WZ-SB00-33-04-161	WZ-SB00-32-04-011
5 U	WZ-SB00-33-05-011	WZ-SB00-33-05-161	WZ-SB00-32-05-011
6 U	WZ-SB00-33-06-011	WZ-SB00-33-06-161	WZ-SB00-32-06-011

Package: 1 pc.

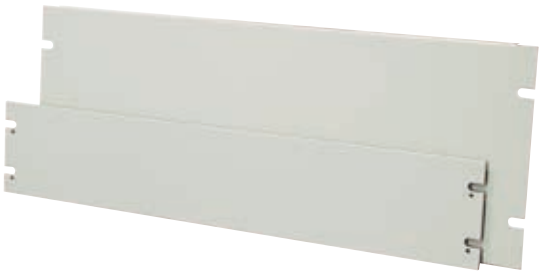

Brush panels

Make easier to organise cables in data cabinets.
19" assembly, height 1 U.
With 341 x 21.5 mm brush opening.
Support plate can be used in order to keep cross cables which are in excess.

Material:
Sheet steel powder painted in light grey (RAL 7035) or black (RAL 9005).

Scope of delivery:
Brush panel with fixing accessories for assembling into the 19" mounting profiles.

Type of panel	Depth [mm]	Package	Colour	Catalogue number
Without support plate	50	1 pc.	RAL 7035	WZ-SB63-00-01-011
			RAL 9005	WZ-SB63-00-01-161
With support plate	300	1 pc.	RAL 7035	WZ-SB63-00-02-011
			RAL 9005	WZ-SB63-00-02-161

Brush panel without support plate

Brush panel with support plate

ACCESSORIES FOR CABINETS AND OPEN RACKS

MASKING ITEMS

Openings in the bottom plate, top plate and roof of the cabinets

SZB AND OTS1 (DEPTH 600, 800) CABINETS

Top plate

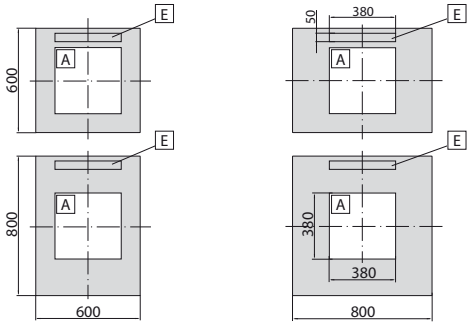

Standard roof

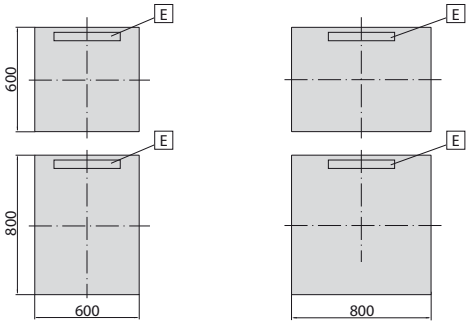

Bottom plate

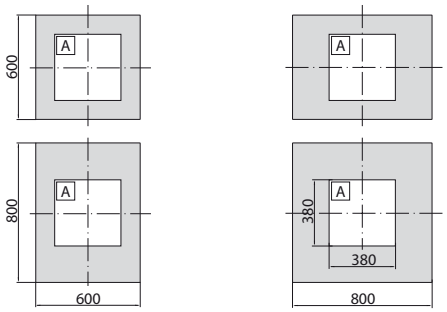

Roof with opening for blanking or cable entry plates

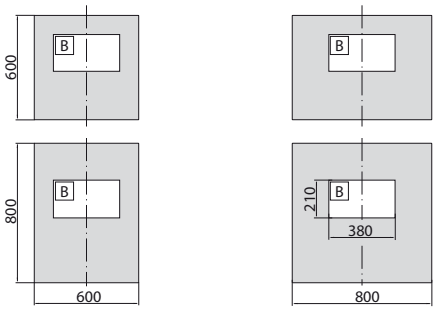

SZB SE, DC AND OTS1 (DEPTH 1000) CABINETS

Top plate and roof with openings for blanking or cable entry plates

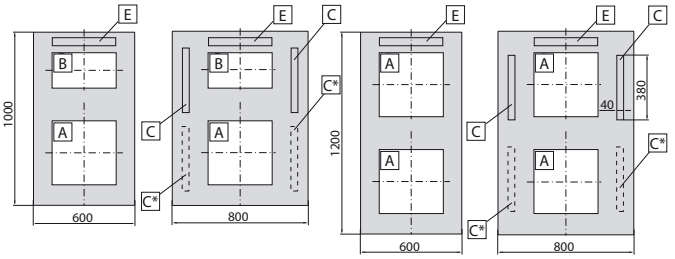

Standard roof

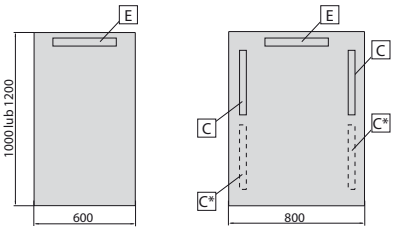

Bottom plate

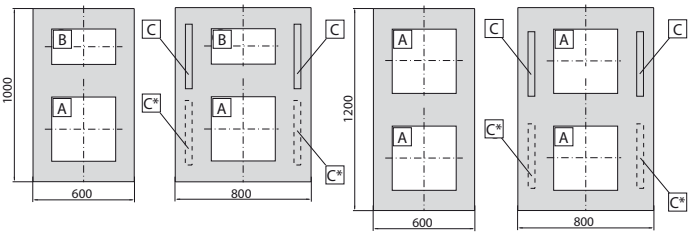

DSR CABINET

Top and bottom plate

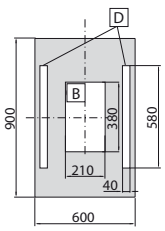

Roof with cable openings

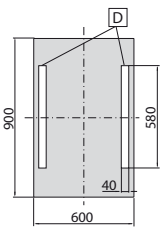

Note:
Openings "C" and "E" are covered with knock-out blanking plates.
Openings "C*" are only in DC cabinets (page 163).

Blanking and cable entry plates and strips for bottom plate, top plate and roof

Appliances in accordance with drawings on page 124.

Material:
Sheet steel powder painted in light grey (RAL 7035) or black (RAL 9005).

Scope of delivery:
Blanking/cable entry plate or strip with fixing accessories.

Product name	For opening	Catalogue number	
		RAL 7035	RAL 9005
Solid blanking plate	A	WZ-1718-38-01-011	WZ-1718-38-01-161
	B	WZ-1718-38-02-011	WZ-1718-38-02-161
	C	WZ-1718-09-02-011	WZ-1718-09-02-161
	D	WZ-1718-09-01-011	WZ-1718-09-01-161
Perforated blanking plate	A	WZ-1718-39-01-011	WZ-1718-39-01-161
	B	WZ-1718-39-02-011	WZ-1718-39-02-161
Blanking plate with a fabric filter	A	WZ-1718-42-01-011	WZ-1718-42-01-161
	B	WZ-1718-42-02-011	WZ-1718-42-02-161
Cable entry plate with a brush strip	A	WZ-1718-37-01-011	WZ-1718-37-01-161
	B	WZ-1718-37-02-011	WZ-1718-37-02-161
Brush strip	C, E	WZ-1718-08-02-000	WZ-1718-08-02-000
	D	WZ-1718-08-01-000	WZ-1718-08-01-000
Cable entry plate with a foam strip	A	WZ-1718-40-01-011	WZ-1718-40-01-161
	B	WZ-1718-40-02-011	WZ-1718-40-02-161
Foam strip	C	WZ-1718-07-02-011	WZ-1718-07-02-161
	D	WZ-1718-07-01-011	WZ-1718-07-01-161
Cable entry plate with a fabric filter and a brush strip	A	WZ-SB76-00-00-011	WZ-SB76-00-00-161

Package: 1 pc.

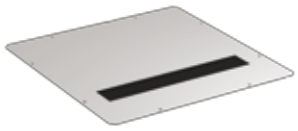

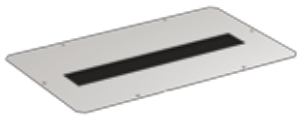

Blanking plates with a fabric filter

Cable entry plates with a brush strip

Brush strip

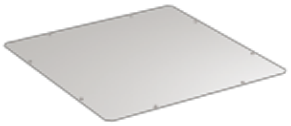

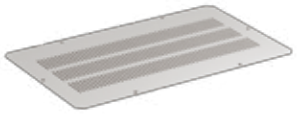

Perforated blanking plates

Solid blanking plates

Cable entry plate with a fabric filter and a brush strip

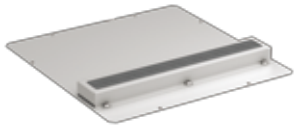

Cable entry plates with a foam strip

Foam strip

ACCESSORIES FOR CABINETS AND OPEN RACKS

MASKING ITEMS

Vertical masking panels for cabinets 800 mm wide

Vertical masking panels

For covering space between front 19" mounting profiles and cabinet's sides.
Designed for cabinets: SZB, OTS1, SZB SE.
Only for cabinets 800 mm wide.

Material:
Sheet steel powder painted in light grey (RAL 7035) or black (RAL 9005).

Scope of delivery:
Two vertical masking panels with fixing accessories.

Height [U = 44.45 mm]	Catalogue number	
	RAL 7035	RAL 9005
47 U	WZ-1718-59-01-011	WZ-1718-59-01-161
45 U	WZ-1718-59-02-011	WZ-1718-59-02-161
42 U	WZ-1718-59-03-011	WZ-1718-59-03-161
39 U	WZ-1718-59-09-011	WZ-1718-59-09-161
36 U	WZ-1718-59-05-011	WZ-1718-59-05-161
33 U	WZ-1718-59-08-011	WZ-1718-59-08-161
30 U	WZ-1718-59-11-011	WZ-1718-59-11-161
27 U	WZ-1718-59-13-011	WZ-1718-59-13-161
24 U	WZ-1718-59-07-011	WZ-1718-59-07-161
18 U	WZ-1718-59-15-011	WZ-1718-59-15-161
15 U	WZ-1718-59-16-011	WZ-1718-59-16-161

Package: 1 set = 2 pcs.

Blanking plate for DSR cable opening

For concealing unused cable openings in the top and bottom plate of DSR colocation cabinet.

One cable opening (580 x 40 mm) accommodates four blanking plates.

Material:
Al-Zn coated sheet steel

Scope of delivery:
Blanking plate complete with self-tapping screw for fixing to the top or bottom plate of the cabinet.

Dimensions [mm]	Package	Catalogue number
145 x 70 x 6	1 pc.	WZ-2645-12-01-000

Cable opening cover for DSR divider

For covering unused cable openings in the horizontal divider of DSR colocation cabinets.
One blanking plate is designed for covering one or two cable openings.

Material:
Sheet steel powder painted
in light grey (RAL 7035).

Scope of delivery:
Cable opening cover with self-tapping screw for fixing to the divider.

Dimensions [mm]	Package	Catalogue number
300 x 46 x 23	1 pc.	WZ-2645-11-01-011

Self-adhesive insert of DSR divider

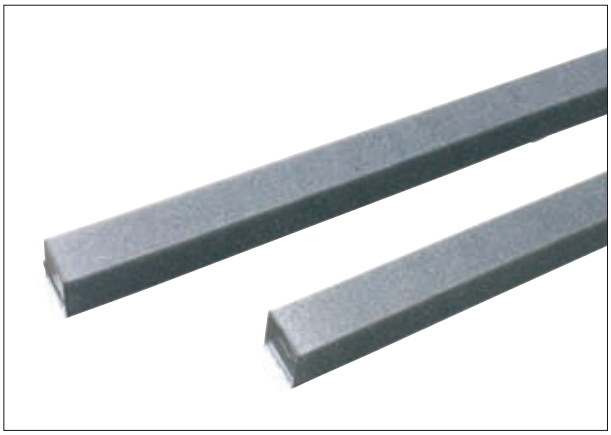

The self-adhesive insert is used to seal horizontally between the dividers and the side panels within DSR colocation cabinets. This prevents foreign objects passing between compartments.

Material:
Polyurethane gasket 30 x 30 mm

Scope of delivery:
One 2 m length is sufficient for sealing 3 dividers within colocation cabinet.

Package	Catalogue number
2 m	WZ-2645-09-00-000

ACCESSORIES FOR CABINETS AND OPEN RACKS

SUPPLEMENTARY ACCESSORIES FOR SZU CABINETS

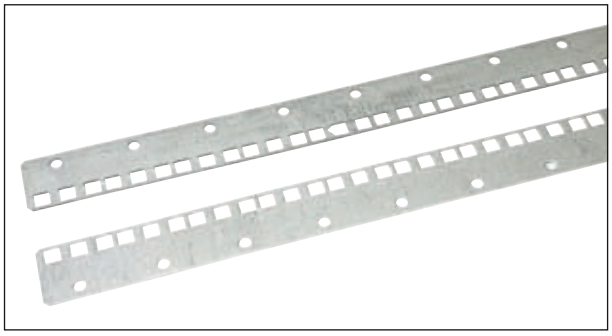

Adapters for installing 19" appliances on 21" mounting profiles

Material:
Sheet steel Al-Zn coated

Scope of delivery:
Set of 2 adapters 47 U high with fixing accessories.

Package	Catalogue number
2 pcs.	WZ-3196-27-00-000

Lifting eyes

Screwed to threaded holes in the top plate of the cabinet's frame. Eye diameter: 30 mm, thread for fastening: M12

Material:
Galvanised steel

Scope of delivery:
Lifting eyes are sold as individual items.

Package	Catalogue number
1 pc.	M1F-00-0106

POWER SUPPLY SYSTEMS

POWER SUPPLY SYSTEMS

LZI-30/9

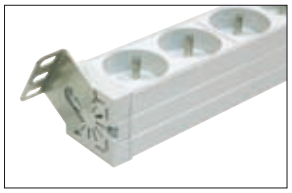

19" power strip, possible to be mounted at 12 different angles

Single-phase power strips 16 A

Characteristics:
Anodized aluminium body, in natural colour.
Plastic elements: light-grey similar to RAL 7035.
Dimensions: height/width 44 mm, depth 44 mm (protruding elements increase the depth to 70 mm), length according to the table. Removable metal mounting brackets for installing the strip in four directions.
LZI-30/9 strip can be mounted at various angles, 12 positions of set up regulated by 30° turns.

TECHNICAL DATA:

Nominal voltage. . . . . .230 V AC
Maximum load . . . . . .16 A / 3680 W
Protection degree . . . . . .IP 20
Supply cable . . . . . .3 m, black, conductor section 1.5 mm^2 (other lengths within of 2-5 m scope, available on request)

Installation	Power strip type	Lenght without mounting brackets [mm]	Features									Catalogue number
			Check lamp	Illuminated switch	Surge arrester	RFI noise filter	Circuit breaker MCB-16	Ammeter	Number of UTE sockets	Number of IEC C13 sockets	Number of IEC C19 sockets	
19" 1U	LZI-30/9	431							9			WZ-LZI30-09-00-000
	LZ-30F	431		x	x	x			5			WZ-LZ30-F0-00-000
	LZ-114	431	x							7		WZ-LZ11-40-00-000
	LZ-211	431		x					6			WZ-LZ21-10-00-000
	LZ-214	431		x						7		WZ-LZ21-40-00-000
	LZ-312	431	x				x		3	2		WZ-LZ31-20-00-000
	LZ-165	431						x	8			WZ-LZ16-50-00-000
vertical 0U	LZ-221	603		x					12			WZ-LZ22-10-00-000
	LZ-521	860	x		x	x	x		9	1		WZ-LZ52-10-00-000
	LZ-131	861	x						18			WZ-LZ13-10-00-000
	LZ-231	861		x					18			WZ-LZ23-10-00-000
	LZ-331	990	x				x		15	3		WZ-LZ33-10-00-000
	LZ-531	990			x	x	x		15	1		WZ-LZ53-10-00-000
	LZ-532	1033	x		x	x	x		12	4		WZ-LZ53-20-00-000
	LZ-166	1076								20	4	WZ-LZ16-60-00-000
	LZ-167	560								10	2	WZ-LZ16-70-00-000
	LZ-168	560								12		WZ-LZ16-80-00-000
	LZ-169	732								15		WZ-LZ16-90-00-000

Type of sockets						
Standard sockets			Sockets on request			
		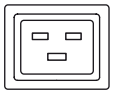				
UTE (French type) 230 V, 16 A	IEC 60320 C13 230 V, 10 A	IEC 60320 C19 230 V, 16 A	Schuko 230 V, 16 A	IEC 60320 C13 230 V, 10 A with lock	IEC 60320 C13 230 V, 10 A with fuse	IEC 60320 C13, 230 V, 10 A with fuse and check lamp

Power strips mounted in 4 directions

19" power strips

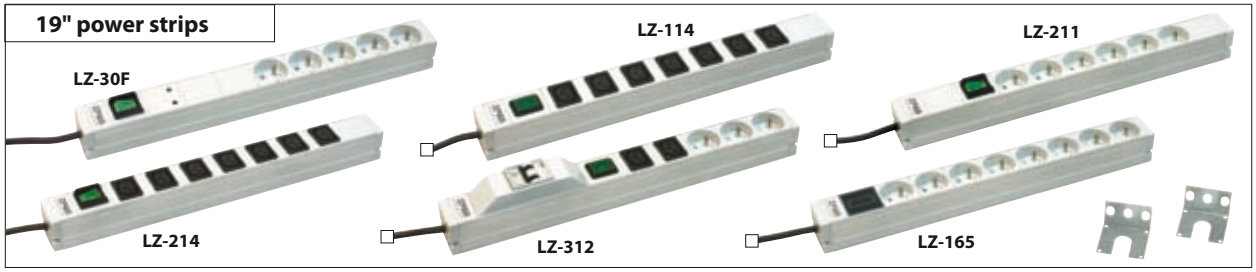

Vertically mounted power strips

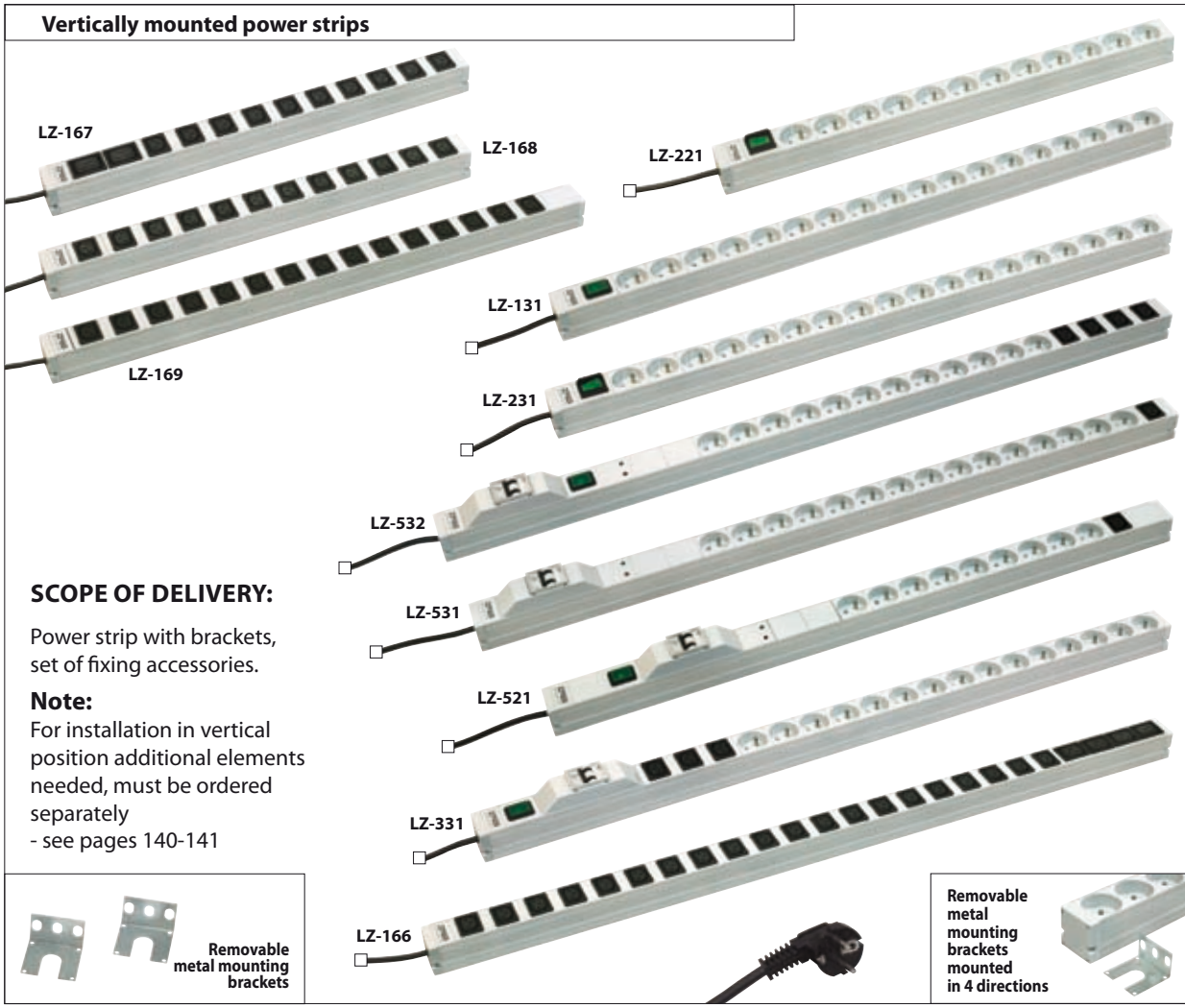

SCOPE OF DELIVERY:

Power strip with brackets, set of fixing accessories.

Note:
For installation in vertical position additional elements needed, must be ordered separately
- see pages 140-141

Removable metal mounting brackets

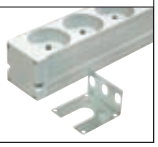

Removable metal mounting brackets mounted in 4 directions

Type of plugs				
Standard plug	**Plugs on request**			
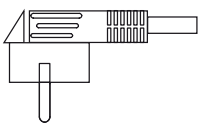	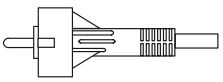	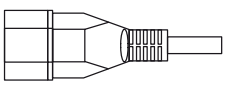	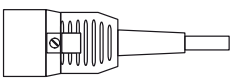	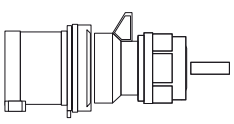
Angle Unischuko 230 V, 16 A	Straight Unischuko 230 V, 16 A	IEC 60320 C14 230 V, 10 A	IEC 60320 C20 230 V, 16 A	IEC 60309 230 V, 16 A

POWER SUPPLY SYSTEMS

Single-phase power strips 32 A

Characteristics:
Anodized aluminium body, in natural colour (body of LZ-322 power strip is made of sheet steel, powder painted in RAL 7035).
Plastic elements: light-grey (similar to RAL 7035) or black (similar to RAL 9005).
Dimensions: height/width 44 mm, depth 70 mm, length according to the table.
Strips mounted in 4 directions (LZI-322 mounted in 2 directions).

TECHNICAL DATA:

Nominal voltage. . . . . 230 V AC
Maximum load . . . . . 32 A / 7360 W
Protection degree . . . . . IP 20
Supply cable . . . . . 3 m, white, conductor section 4 mm^2
(other lengths within of 2-5 m scope, available on request)

SCOPE OF DELIVERY:

Power strip with brackets, set of fixing accessories.
Note: For installation in vertical position additional elements needed, must be ordered separately - see pages 140-141

Installation	Power strip type	Lenght without mounting brackets [mm]	Features						Catalogue number
			Circuit breaker MCB-C16	Ammeter	Number of UTE sockets	Number of IEC C13 sockets	Number of IEC C19 sockets	Number of IEC 60309 sockets	
19" 1U	LZ-321	431	x				6		WZ-LZ32-10-00-000
19" 2U	LZ-322	431						4	WZ-LZ32-20-00-000
vertical 0U	LZ-323	1205	x			20	4		WZ-LZ32-30-00-000
	LZ-324	732	x		12				WZ-LZ32-40-00-000
	LZ-325	861	x			16			WZ-LZ32-50-00-000
	LZ-326	990	x	x		12	4		WZ-LZ32-60-00-000

Type of sockets							
Standard sockets				Sockets on request			
		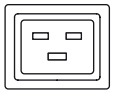					
UTE (French type) 230 V, 16 A	IEC 60320 C13 230 V, 10 A	IEC 60320 C19 230 V, 16 A	IEC 60309 230 V, 32 A	Schuko 230 V, 16 A	IEC 60320 C13 230 V, 10 A with lock	IEC 60320 C13 230 V, 10 A with fuse	IEC 60320 C13, 230 V, 10 A with fuse and check lamp

Cable plug
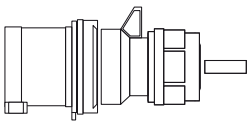
IEC 60309 230 V, 32 A

POWER SUPPLY SYSTEMS

19" power strips

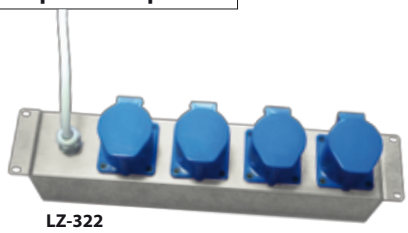

LZ-322

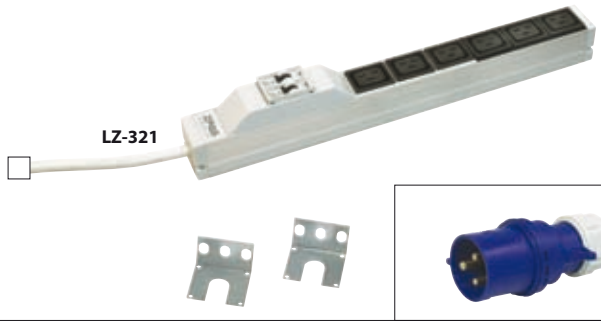

LZ-321

Vertically mounted power strips

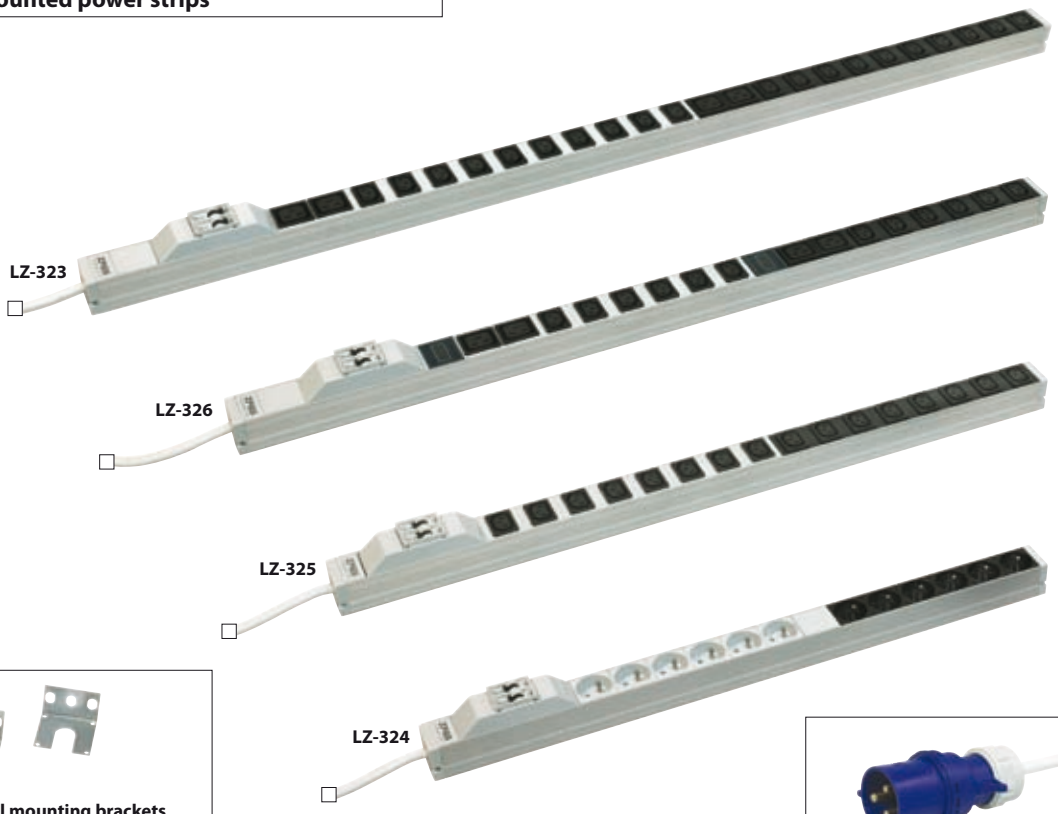

LZ-323

LZ-326

LZ-325

LZ-324

Removable metal mounting brackets mounted in 4 directions

POWER SUPPLY SYSTEMS

Three-phase power strips 3 x 16 A

Characteristics:
Anodized aluminium body, in natural colour.
Plastic elements: light-grey (similar to RAL 7035), black (similar to RAL 9005) and red (similar to RAL 3002).
Dimensions: width 44 mm, depth 44 mm, length according to the table.
Removable metal mounting brackets for installing the strip in four directions, at 90° turning.

TECHNICAL DATA:

Nominal phase voltage ..... 230 V AC
Maximum load ..... 3 x 16 A / 11040 W
Protection degree ..... IP 20
Supply cable ..... 3 m, white, conductor section 2.5 mm^2
(other lengths within 2-5 m scope, available on request)

SCOPE OF DELIVERY:

Power strip with brackets, set of fixing accessories.
Note: For installation in vertical position additional elements needed, must be ordered separately - see pages 140-141

Installation	Power strip type	Lenght without mounting brackets [mm]	Features				Catalogue number
			Ammeter	Number of UTE sockets	Number of IEC C13 sockets	Number of IEC C19 sockets	
vertical 0U	LZ-3161	1893			36	6	WZ-LZ31-61-00-000
	LZ-3162	990		18			WZ-LZ31-62-00-000
	LZ-3163	861			12	6	WZ-LZ31-63-00-000
	LZ-3164	1076	x	18			WZ-LZ31-64-00-000

Type of sockets						
Standard sockets			Sockets on request			
		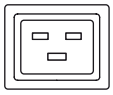	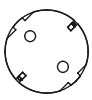			
UTE (French type) 230 V, 16 A	IEC 60320 C13 230 V, 10 A	IEC 60320 C19 230 V, 16 A	Schuko 230 V, 16 A	IEC 60320 C13 230 V, 10 A with lock	IEC 60320 C13 230 V, 10 A with fuse	IEC 60320 C13, 230 V, 10 A with fuse and check lamp

Cable plug
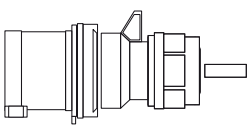
IEC 60309 3 x 16 A

POWER SUPPLY SYSTEMS

Vertically mounted power strips

Removable metal mounting brackets mounted in 4 directions

POWER SUPPLY SYSTEMS

Three-phase power strips 3 x 32 A

Characteristics:
Anodized aluminium body, in natural colour.
Plastic elements: light-grey (similar to RAL 7035) or black (similar to RAL 9005).
Dimensions: width 44 mm, depth 70 mm, length according to the table.
Removable metal mounting brackets for installing the strip in four directions, at 90° turnings.

TECHNICAL DATA:

Nominal phase voltage ..... 230 V AC
Maximum load ..... 3 x 32 A / 22080 W
Protection degree ..... IP 20
Supply cable ..... 3 m, white, conductor section 4 mm^2
(other lengths within of 2-5 m scope, available on request)

SCOPE OF DELIVERY:

Power strip with brackets, set of fixing accessories.
Note: For installation in vertical position additional elements needed, must be ordered separately - see pages 140-141

Installation	Power strip type	Lenght without mounting brackets [mm]	Features					Catalogue number
			Circuit breaker MCB-C16	Ammeter	Number of UTE sockets	Number of IEC C13 sockets	Number of IEC C19 sockets	
vertical 0U	LZ-3321	1097	x			6	6	WZ-LZ33-21-00-000
	LZ-3322	1871	x			18	6	WZ-LZ33-22-00-000
	LZ-3323	1590	x		24			WZ-LZ33-23-00-000
	LZ-3324	1871	x	x		18	6	WZ-LZ33-24-00-000

Type of sockets						
Standard sockets			Sockets on request			
		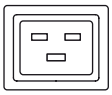				
UTE (French type) 230 V, 16 A	IEC 60320 C13 230 V, 10 A	IEC 60320 C19 230 V, 16 A	Schuko 230 V, 16 A	IEC 60320 C13 230 V, 10 A with lock	IEC 60320 C13 230 V, 10 A with fuse	IEC 60320 C13, 230 V, 10 A with fuse and check lamp

Cable plug
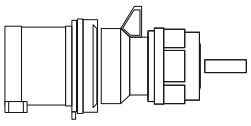
IEC 60309 3 x 32 A

POWER SUPPLY SYSTEMS

Vertically mounted power strips

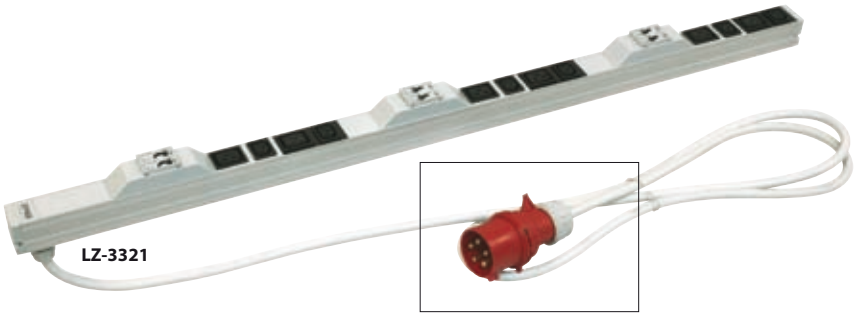

LZ-3321

LZ-3322

LZ-3323

LZ-3324

Removable metal mounting brackets mounted in 4 directions

POWER SUPPLY SYSTEMS

Monitored power strips

Anodized aluminium body, in natural colour.
Plastic elements: light-grey (similar to RAL 7035), black (similar to RAL 9005) and red (similar to RAL 3002).
Strip compact size: height/width 44 mm, depth 44 mm (some pieces of equipment can locally increase depth up to 70 mm), length as in the table.
Removable metal mounting brackets.
Strip can be installed in 4 planes.
Built-in web server with strip current load monitoring with the Watchdog over IP function.

TECHNICAL DATA:

Nominal voltage .....230 V AC
Maximum load.....as in the table below
Network interface.....Ethernet RJ45 (10/1000 BaseT)
Protocols ..... TCP/IP, HTTP, SNMP, SMTP, Syslog, DHCP
Protection degree.....IP 20
Supply cable .....3 m (other lengths within of 2-5 m scope, available on request), white or black, conductor section: 1,5 mm^2 (16 A strips), 2,5 mm^2 (3 x 16 A strips) or 4 mm^2 (32 A and 3 x 32 A strips)

SCOPE OF DELIVERY:

Power strip with brackets, set of fixing accessories.
Note: For installation in vertical position additional elements needed, must be ordered separately - see pages 140-141

Maximum load	Installation	Power strip type	Lenght without mounting brackets [mm]	Features					Catalogue number
				Circuit breaker MCB-C16	Ammeter	Number of UTE sockets	Number of IEC C13 sockets	Number of IEC C19 sockets	
16 A 3680 W	19"	LZM-161	430		1	5			WZ-LZM1-61-00-000
		LZM-162	430		1		6		WZ-LZM1-62-00-000
	vertical 0U	LZM-163	732		1	12			WZ-LZM1-63-00-000
		LZM-164	1248		1		24		WZ-LZM1-64-00-000
		LZM-165	1248		1		18	6	WZ-LZM1-65-00-000
32 A 7360 W	vertical 0U	LZM-321	1248	x	2	18			WZ-LZM3-21-00-000
		LZM-322	1076	x	2		12	4	WZ-LZM3-22-00-000
		LZM-323	1076	x	2		16		WZ-LZM3-23-00-000
		LZM-324	1420	x	2		24		WZ-LZM3-24-00-000
		LZM-325	1420	x	2		18	6	WZ-LZM3-25-00-000
3 x 16 A 11040 W	vertical 0U	LZM-3161	1463		3	24			WZ-LZM3-16-10-000
		LZM-3162	1377		3		24		WZ-LZM3-16-20-000
		LZM-3163	1635		3		24	6	WZ-LZM3-16-30-000
3 x 32 A 22080 W	vertical 0U	LZM-3321	1936	x	6	18			WZ-LZM3-32-10-000
		LZM-3322	1226	x	6			6	WZ-LZM3-32-20-000
		LZM-3323	2000	x	6		24		WZ-LZM3-32-30-000
		LZM-3324	2000	x	6		18	6	WZ-LZM3-32-40-000

Type of sockets						
Standard sockets			Sockets on request			
		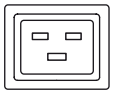				
UTE (French type) 230 V, 16 A	IEC 60320 C13 230 V, 10 A	IEC 60320 C19 230 V, 16 A	Schuko 230 V, 16 A	IEC 60320 C13 230 V, 10 A with lock	IEC 60320 C13 230 V, 10 A with fuse	IEC 60320 C13, 230 V, 10 A with fuse and check lamp

POWER SUPPLY SYSTEMS

19" power strips

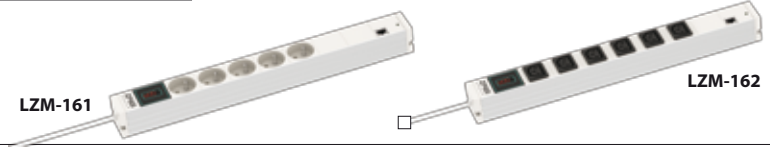

Removable metal mounting brackets mounted in 4 directions

Vertically mounted power strips

Removable metal mounting brackets mounted in 4 directions

Type of plugs			
16 A	32 A	3 x 16 A	3 x 32 A
Angle Unischuko (other plugs - see page 131)	IEC 60309 single-phase	IEC 60309 three-phase	IEC 60309 three-phase

POWER SUPPLY SYSTEMS

ACCESSORIES FOR VERTICAL INSTALLATION OF POWER STRIPS

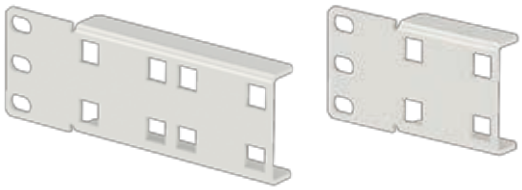

Short and long LZ bracket

Open rack with power strips installed to LZ brackets

LZ brackets

Brackets for vertical installation of power strips in data open racks.
Available in short version for 1 power strip and long for 2 power strips.

Material:
Sheet steel powder painted in light grey (RAL 7035) or black (RAL 9005).

Scope of delivery:
LZ bracket with fixing accessories.

LZ bracket version	Catalogue number	
	RAL 7035	RAL 9005
short	WZ-5367-53-01-011	WZ-5367-53-01-161
long	WZ-5367-53-02-011	WZ-5367-53-02-161

Package: 1 pc.

LZ fixing profile

Fixing profile for vertical installation of power strips in 800 mm wide server cabinets.

Material:
Sheet steel powder painted in light grey (RAL 7035)
or black (RAL 9005).

Scope of delivery:
LZ fixing profile with fixing accessories.

For cabinet height	Catalogue number	
	RAL 7035	RAL 9005
47U	WZ-5367-52-01-011	WZ-5367-52-01-161
45U	WZ-5367-52-02-011	WZ-5367-52-02-161
42U	WZ-5367-52-03-011	WZ-5367-52-03-161

Package: 1 pc.

Server cabinet with power strips installed to fixing profiles

LZ fixing profile

POWER SUPPLY SYSTEMS

MPSM-S1 Microprocessor Power Control Panel

The most important factors that determine the correct operation of modern automation, electronics, industrial computers and other devices are the correct power supply and the appropriate climatic conditions. These are necessary to ensure ongoing operation of priority infrastructure equipment – server room, data communication, power engineering.

MPSM-S1 is a programmable 19" panel for power supply, control, monitoring and recording. It provides voltage, power and current measurement for each socket, and also temperature and humidity measurement. The device is equipped with an unparalleled set of features that make it indispensable in data communication infrastructure. Also, MPSM-S1 is equipped with a 4 GB internal memory used for storing the measurement results, events, alarms which lasts for about 24 months of continuous recording.

USABLE FEATURES

- **SOFT-START – soft start of servers, cabinets, automation components, etc.**
  Allows for defining individual power-up delays for individual panel sockets after power supply recovery or after activation of the SLAVE sockets. This allows you to set a dedicated power-up scenario for the entire set of devices powered from the MPSM-S1 panel.
- **MASTER-SLAVE – energy conservation**
  Automatic shut-off of SLAVE sockets (devices) when the MASTER device (socket) is powered down. The level of energy consumption for the MASTER socket is constantly monitored by the power supply panel and when it exceeds the user-defined threshold, the SLAVE sockets are re-powered up. Powering up and down has also user-defined time delay. Each socket in MPSM-S1 panel can work in MASTER, SLAVE or NONE mode (excluding MASTER-SLAVE functionality). With this solution, you can change the configuration of the set powered from the MPSM-S1 panel without having to physically plug the devices to dedicated sockets (continuity of operation).
- **PDU-THERMOSTAT – multi-stage control of fans, heaters and air conditioners**
  Each panel socket can be activated by the temperature on the basis of being above or below the user-defined value. Individual socket can also be activated by a signal below or above different set temperatures.
- **PDU-HYGROSTAT – multi-stage control of humidifiers and air dryers**
  Each panel socket can be activated by humidity levels on the basis of being above or below the user-defined value. Individual socket can also be activated by a signal below or above set values.
- **Output control**
  Allows for powering down any panel socket regardless of its mode and time.
- **Indication of alarm states:**
  - exceeded set value for current or underload of individual sockets
  - exceeded set value for current or underload of the entire set of connected receivers
  - grid voltage above or below the setpoints
  - ambient temperature above or below the setpoints
  - humidity above or below the setpoints
- **Device settings:**
  - hysteresis (ΔT) for thermostat
  - hysteresis (ΔH) for hygrostat
  - time delay for the MASTER-SLAVE function
  - load display mode power (VA) or current (A)
  - reset to factory defaults
- **On-line monitoring of:**
  - current and power for individual slots
  - current and overall joined power
  - mains voltage
  - temperature and humidity
- **Internal database for:**
  - recording of measurements, events, alarms
  - clock, calendar with battery backup
  - even 24 months of continuous recording
- **Ethernet Interface:**
  - data read and write via network (LAN/WAN)
  - remote on-line management and monitoring
  - SNMP, SNTP, DHCP
  - Windows® management application
- **Display settings**
  Choosable content of display.

Thanks to the special technique used for creating the device software, all functions are executed in parallel. It means that while we're in menu editing settings, the device is working in the background, performing its status tasks and immediately responds to changes which have just be done or received measurements. After a power loss, the device will rememer the last saved configuration. The clock and the calendar work even during prolonged power failure.

SCOPE OF DELIVERY

Product name	Package	Catalogue number
MPSM-S1 Microprocessor Power Control Panel Accessories supplied with the panel: power supply cable, temperature and humidity sensor with 1.8 m cable, two brackets for mounting the panel in a 19" cabinet along with fixtures (screws, washers, cage nuts), four rubber feet, cable management tray with a complete set of cable clips and fasteners, software with operating manual on a CD.	1 set	WZ-4994-01-00-161
Temperature and humidity sensor with 1.8 m cable (spare part)	1 pc.	T1Z-01-0045

TECHNICAL SPECIFICATIONS

Power input	**Supply voltage**	85-260 V AC
	Power consumption	30 W
	Frequency	50 Hz
	Maximum overall sockets current	16 A
Power output	**Output voltage**	85-260 V AC (supply voltage dependent)
	Maximum current for a single socket	10 A
Protections	**Current**	i(max) = 20 A continuous for 150 % i(max) shut-down in 1 h, for 200 % i(max) shut-down in 5–25 sec. for 300 % i(max) shut-down in 1.6–4.8 sec., parameters for the working temperature of 25 °C
Measurements	**Voltage**	Measuring range: 85-260 V AC Class: 2.5% (for sine waves) Resolution: 1 V Frequency of measurements: 1/sec.
	Socket currents 1-8	Measuring range: 0-16 A (sum), 0-10 A (socket) Resolution: 0.01 A Class: 5 % (for sine waves) ± 100 mA Frequency of measurements: series of 8 measurements/sec.
	Temperature	Measuring range: 0–85 °C Measuring error: typical ± 0.3 °C Resolution: 0.1 °C Frequency of measurements: 1/sec.
	Humidity	Measuring range: 0-100 %RH Measuring error: typical ±2 % RH Resolution: 0.1 % RH Frequency of measurements: 1/sec.
	Frequency of measurements	One series of measurements/sec. (11 measurements/sec.)
Working conditions	**Working temperatures**	5-45 °C
	Working humidity	10-85 % (no condensation)
Casing	**Dimensions**	19" x 1U x 190 mm
	Weight	2.5 kg
	Protection class	IP 20

Note:
Due to the continuous construction development and changes of technical requirements, ZPAS S.A. reserves the right to change these parameters.

SOFTWARE FEATURES

In the era of globalization, data communication devices and people who manage them are often miles apart, while the devices themselves are scattered over great areas, creating locally smaller and larger systems. To make remote managing of data communication infrastructure with MPSM-S1 devices as convenient as possible, we created Windows-dedicated software. Using a built-in address book, the software connects to a specific MPSM-S1 device to perform configuration, retrieve and save data. This way, you can manage and control large systems from a single location. The application consists of tabs containing all the functions of the MPSM-S1. The first tab – DASHBOARD – is the instrument panel which contains the key parameters measured by the device. The panels include also the ARCHIVE tab with filters that you can use to download and view historical data, such as measurements, events, alarms, configuration changes.

You can generate as many windows with historical data as you want so you can compare the data in various configurations based on selected filters. Data can also be exported to a CSV file and then imported into Excel, for example. The application has a "back to the past" feature where you can select any point on the archives diagram to go back to that moment in time to see measurements, events, alarms and configuration. The data will be presented in the main application as if they were happening right at this moment. MPSM-S1 supports SNMP protocol in read mode. The software comes with an SNMP tree model as a MIB file which can be imported into your control systems. The device also supports TRAP, meaning it sends alarm and event notifications to predefined servers. Codes and descriptions of TRAPs are included with the software.

POWER SUPPLY SYSTEMS

MPSM-S1 MICROPROCESSOR POWER CONTROL PANEL

APPLICATION SCENARIO

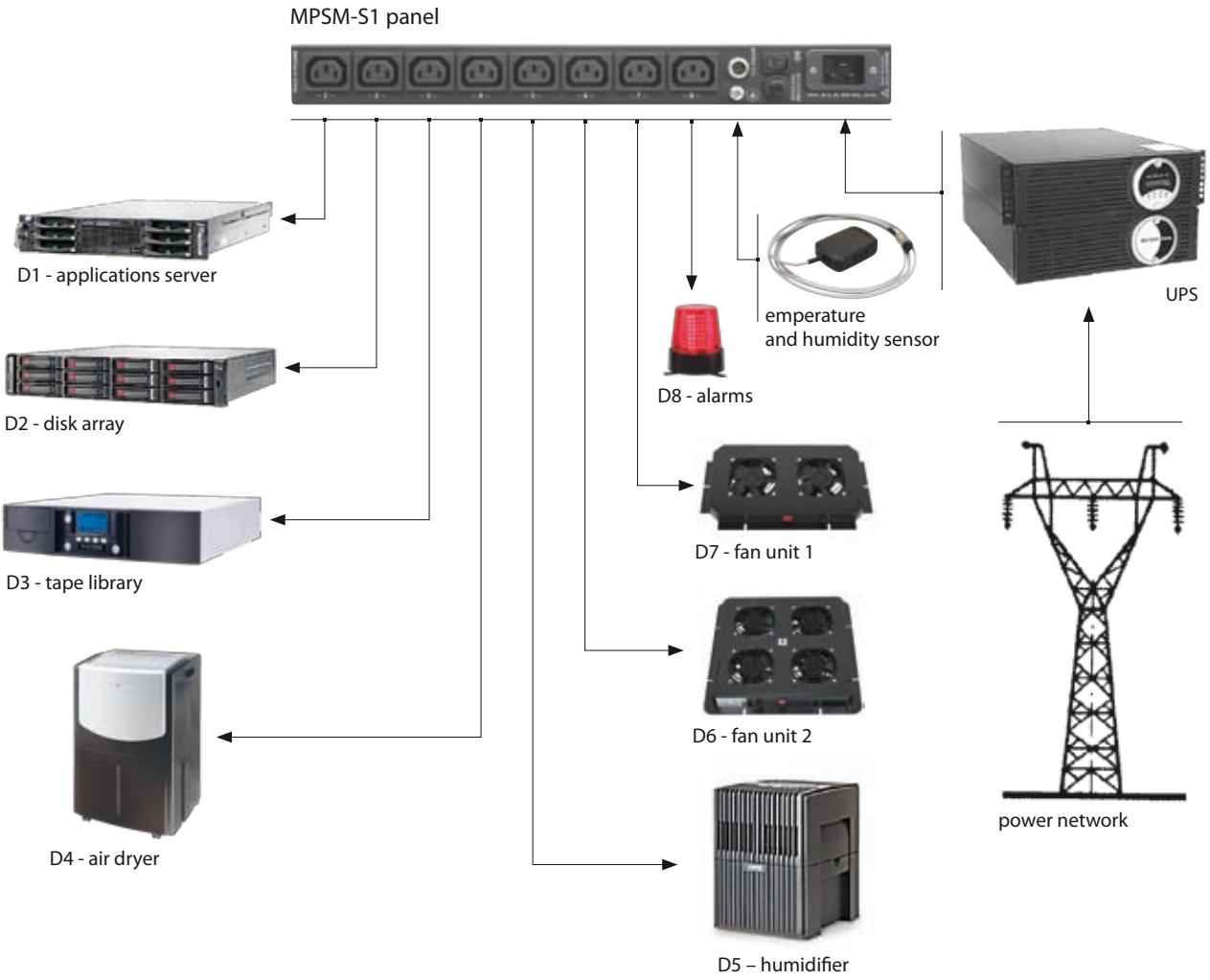

Example of programming the panel functions:

SOFT-START
Scenario for starting the devices after power supply recovery:

Time	Action
0 s	Power start
2 s	D6
4 s	D7
6 s	D8
8 s	D4
10 s	D5
12 s	D3
14 s	D2
90 s	D1

MASTER-SLAVE
Scenario for powering up Slave devices after powering up the Master device:
D1 - Master
D2, D3, D4 - Slave
T = 5 s (delay time for powering down and up the Slave devices)
I = 0,5 A (current drawn from the Master slot; below this value, the Master device is regarded as powered-down)

THERMOSTAT/ HYGROSTAT
Scenario for powering up cooling, humidifying and drying devices in the case of exceeding programmed temperature and humidity thresholds:
D4: RH_{max} = 80 %
D5: RH_{min} = 20 %
D6: t_{max} = 25 °C
D7: t_{max} = 27 °C
D8: t_{max} = 32 °C
RH_{min} = 15 %

INTERNAL ALARMS
Load alams
D1: I_{min} = 0,1 A
Temperature alams
T_{max} = 35°C
Voltage alams
U_{max} = 250 V
U_{min} = 207 V
If the current, temperature or voltage values are outside preset thresholds, the internal panel alarm will be signalled (sound signal and a flashing message on the display).

SCENARIO DESCRIPTION

The MPSM-S1 device supports the cabinet holding set of devices operating within one logical solution, UPS, main ventilation panel, auxiliary ventilation panel, humidifier, air dryer and alarms. The logical solution should be understood as a set of interdependent devices, each of which is necessary for proper operation of the whole. In such a case, the appropriate set power-up scenario is extremely important. For example, when the server is turned on faster than the disk array, then it will not detect the disk array at the time of checking the readiness of individual devices and thus the entire system may fail to start. In this scenario, the server is switched on as the last the device with an additional time delay. Then you can be sure that all of its peripherals (disk array, tape library, etc.) are ready to work and will return ready-to-use during data bus scanning. Furthermore, when the main device of the system is turned off, the other devices do not have to be working any longer.

In this configuration, the MPSM-S1 ensures the following:

- correct scenario for powering up the devices
- a device dependent on the master server is disconnected after the DeltaMS time, when the server is remotely or physically switched off
- maintaining constant temperature by controlling the ventilation panel, and in the next step, when the temperature continues to rise, powering up the auxiliary ventilation panel
- maintaining constant humidity in a room by switching the humidifier on when RH humidity drops below 20 %, and switching the air dryer on when RH humidity rises above 80 %
- MPS M-S1 alarm and external alarm (alarm lamp) when the MPS M-S1 have exhausted all measures and is no longer able to maintain the correct ambient temperature or humidity
- MPSM-S1 alarm when the server is disconnected or shuts down by itself due to a failure or other actions
- supply voltage level control and MPSM-S1 alarm when the value of this voltage exceeds the allowable limits
- on-line visualization of temperature, humidity, supply voltage or currents on each of the slots, and their overall values from all slots; all on the LC D display

Note:
The parameter values used in the scenario are merely illustrative and may vary from those in specific real systems.

MONITORING AND CONTROL SYSTEM BASED ON MPSM-S1 DEVICES

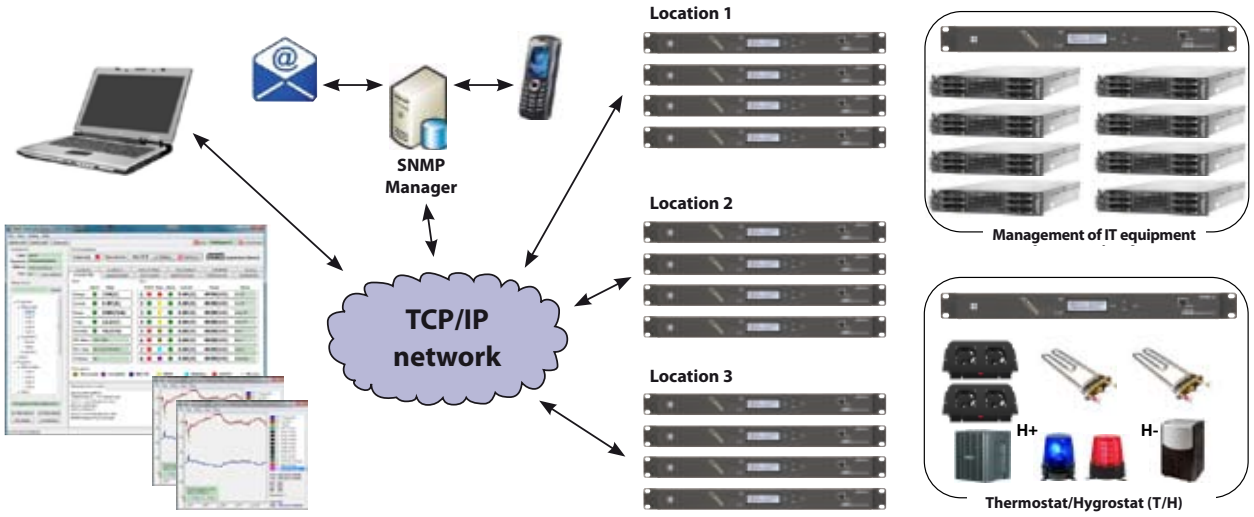

POWER SUPPLY SYSTEMS

PDU-1
switched power distribution unit

8-port power strip suitable for installation in a 19" rack server cabinet. The strip takes up 1U in height. It has a 10/100Mbit network interface for remote monitoring of power consumption, and alerting in the event of exceeding selected states by means of sending an e-mail or SNMP. With this power strip you can remotely switch on/off each socket separately (via web interface), **and change power supply parameters, including the total power consumption (for the entire strip).**

The strip has a sound system to alert personnel in the case of system overload. Also, a digital indicator to inform about total power consumed by connected servers is installed in the front section. The maximum load for the entire strip is 16 A.

Package	Colour	Catalogue number
1 pc.	RAL 9005	T1Z-01-0025

GENERAL DESCRIPTION OF THE POWER STRIP

Power parameters meter..... digital measurement with display, True RMS
Installation .....rack – horizontal 19" 1U, support for 8 service outlets
Remote monitoring .....Web, SNMP, included software
Audible alarm .....2-phase, warnings and overloads
Types of alarms.....e-mail, Trap SNMP, sound
Safeguards.....16 A fuse
Protocols.....http, https, SNMP, DHCP, UDP
Outlet control .....allows for controlling each outlet separately (switching on/off)
Allows for defining sequential switching on/off.
It has an SSL certificate and provides for call encryption.
Load control: global for the entire device.
Defined alarm levels.

GENERAL DESCRIPTION OF THE DEVICE

Server output .....8 x IEC 320 C13
Strip input.....1 x Type F (Unischuko)
Safeguard.....1 x fuse 16 A
Network connectors.....1 x RJ45 Ethernet
Power consumption info.....3-digital indicator, range: 0 A ~ 20 A
Current and voltage measurement. . . 0.1 A resolution, +/-2% accuracy
Operating voltage.....230 V
Frequency.....50/60 Hz full range
Max. output current .....16 A
Temperature .....0–40°C
Humidity.....0%–90%
Dimensions .....90 x 432 x 44 mm
Weight.....3 kg

PDU-2
switched power distribution unit

8-port power strip suitable for installation in a 19" rack server cabinet. The strip takes up 1U in height. It has a 10/100Mbit network interface for remote monitoring of power consumption, and alerting in the event of exceeding selected states by sending an e-mail or SNMP. With this power strip you can remotely switch on/off each socket separately (via web interface), **and change power supply parameters (including power consumption) for each port separately.**

The strip has a sound system to alert personnel in the case of system overload. Also, a digital indicator to inform about total power consumed by connected servers is installed in the front section. The maximum load for the entire strip is 16 A.

Package	Colour	Catalogue number
1 pc.	RAL 9005	T1Z-01-0068

GENERAL DESCRIPTION OF THE DEVICE

Server output ..... 8 x IEC 320 C13
Strip input..... 1 x Type F (Unischuko)
Safeguard..... 1 x fuse 16 A
Network connector ..... 1 x RJ45 Ethernet
Optional connector..... 1 x temperature and humidity sensor
Power consumption info..... 3-digitalindicator, range: 0 A ~ 20 A
Current and voltage measurement... resolution: 0.1 A, +/-2% accuracy
Operating voltage..... 230V
Frequency ..... 50/60 Hz full range
Max. output current ..... 16 A
Temperature ..... 0–40°C
Humidity..... 0%–90%
Dimensions ..... 215 x 432 x 44 mm
Weight..... 4.5 kg

GENERAL DESCRIPTION OF THE POWER STRIP

Power parameters meter ..... digital measurement with display, True RMS
Installation ..... rack – horizontal 19" 1U, support for 8 service outlets
Remote monitoring ..... Web, SNMP, included software
Audible alarm ..... 2-phase, warnings and overloads
Types of alarms..... e-mail, Trap SNMP, sound
Safeguards ..... 16 A fuse
Protocols..... http, https, SNMP, DHCP, UDP
Outlet control ..... allows for controlling each outlet separately (switching on/off)
Load control..... for each particular outlet, and global for the entire device
Allows for defining sequential switching on/off.
It has an SSL certificate and provides for call encryption.
The device has Auto PING function for device check, web presence and restarting.
It counts electricity consumption in kWh.
Allows for linking outlets into groups and managing them.
Action calendar for outlets and groups.
Defined alarm levels.
Optional ambient temperature and humidity sensor.

Temperature and humidity sensor for PDU-2

GENERAL DESCRIPTION OF THE DEVICE

Colour ..... RAL 9005
Connection cable with a plug RJ11
Temperature measurement ..... 0–125°C
Temperature measurement resolution ..... 0.5°C
Temperature measurement accuracy ..... (+25°C) 1°C
Humidity measurement 5–95%
Humidity measurement resolution..... 1% RH
Measurement accuracy (+25°C) 5%
Response time (+25°C 90%) ..... 1 minute
Dimensions ..... 65 x 47 x 26 mm
Weight..... 150 g

Package	Colour	Catalogue number
1 pc.	RAL 9005	T1Z-00-0007

POWER SUPPLY SYSTEMS

UPS BATTERY BACKUPS

RA UPS battery backups

Technology . . . . . True On-Line Double Conversion

Power range . . . . . 1-3 kVA

Typical application:
- servers
- work stations
- graphical stations
- control and automation systems
- medical equipment

Accessories	Catalogue number
SNMP module - see page 151	T-SO-910-399
Environmental sensor (requires SNMP module) - see page 151	T-SO-910-412
Rails for 19" rack mounting	T-SO-910-416

Model		RA1k	RA2k	RA3k
Catalogue number		T-SO-910-102	T-SO-910-202	T-SO-910-302
Power rating		1 kVA / 800 W	2 kVA / 1600 W	3 kVA / 2100 W
Input	Nominal voltage	200/208/220/230/240 V AC (single phase)*		
	Voltage range	130 ~ 275 V AC (lower range 130 ~ 160 V AC is acceptable under 70 ~ 100% loading condition)		
	Frequency	50 or 60 ± 5 Hz		
	Power factor	≥ 0.97		
	Electrical connection	Power cord (IEC320 C14)	Power cord (IEC320 C20)	Power cord (IEC320 C20)
Output	Voltage	200/208/220/230 (default) /240 V AC (single phase)		
	Voltage harmonic distortion	< 3% (linear load); < 6% (computer load)		
	Static voltage regulation	± 2%		
	Frequency	50 or 60 ± 0.05 Hz		
	Wave form	Pure sine wave		
	Dynamic voltage regulation	< 8%		
	Overload capability	105 ~ 125%: 3 minutes; 125 ~ 150%: 30 seconds; > 150%: 0.5 seconds		
	Receptacles	IEC320 C13 x 3 x 2	IEC320 C13 x 3 x 2 IEC320 C19 x 1	IEC320 C13 x 3 x 2 IEC320 C19 x 1
Battery	Rating	12 V/8.5 Ah, 2 pcs	12 V/8.5 Ah, 4 pcs	12 V/8.5 Ah, 6 pcs
	Charge current	0.6 ~ 1.2 A (nominal 0.8 A)	0.6 ~ 1.2 A (nominal 0.8 A)	0.74 ~ 1.38 A (nominal 1 A)
	Typical backup time	12 minutes (half load)	13 minutes (half load)	15 minutes (half load)
		4 minutes (full load)	4 minutes (full load)	5 minutes (full load)
Interface	Standard	RS232 x 1, USB x 1, SNMP slot x 1		
Conformance	Safety	CE, EN62040-1-1		
	EMC	EN62040-2, Class B	EN62040-2, Class A	EN62040-2, Class A
Efficiency	AC-AC	> 87% (full load)		
Environment	Operating temperature	0 ~ 40 °C		
	Relative humidity	5 ~ 95% (non-condensing)		
	Audible noise (at one meter)	45 dBA	50 dBA	60 dBA
Physical properties	Dimesions (W x D x H) UPS	440 x 335 x 89 mm	440 x 432 x 89 mm	440 x 610 x 89 mm
	Dimesions (W x D x H) Battery pack			
	Weight UPS	13 kg	21 kg	31 kg
	Weight Battery pack	16 kg	29 kg	43 kg

* For 200 V AC rating, UPS capacity will de-rate 10%.

All specifications are subject to change without prior notice.

RM UPS battery backups

Technology . . . . . True On-Line , Double Conversion, VFI-SS-111 (according to EN 62040-3)

Power range . . . . . 1-3 kVA

Phases in/out . . . . . 1/1 (Plug&Play)

Software . . . . . UPSentry Smart 2000

Typical application:
- servers
- work stations
- graphical stations
- systems in 19" cabinets
- control and automation systems
- medical equipment

Model	Power rating	Backup time	Specification	Dimensions	Weight	Catalogue number
RM10	1.0 kVA	8 min 22 min 40 min 70 min	UPS UPS + 1 battery module RM 1.0 kVA UPS + 2 battery modules RM 1.0 kVA UPS + 3 battery modules RM 1.0 kVA	440 x 434 x 88 mm (2 U)	19 kg	T-SO-910-100
RM22	2.2 kVA	8 min 20 min 35 min 50 min	UPS UPS + 1 battery module RM 2.2 kVA UPS + 2 battery modules RM 2.2 kVA UPS + 3 battery modules RM 2.2 kVA	440 x 526 x 88 mm (2 U)	24 kg	T-SO-910-200
RM30	3.0 kVA	8 min 20 min 35 min 50 min	UPS UPS + 1 battery module RM 3.0 kVA UPS + 2 battery modules RM 3.0 kVA UPS + 3 battery modules RM 3.0 kVA	440 x 503 x 132 mm (3 U)	33 kg	T-SO-910-300

Accessories	Catalogue number
SNMP module - see page 151	T-SO-910-400
Environmental sensor (requires SNMP module) - see page 151	T-SO-910-401
Battery module RM 1.0 kVA, dimensions 440 x 434 x 88 mm (2 U), weight 24 kg	T-SO-910-402
Battery module RM 2.2 kVA, dimensions 440 x 434 x 88 mm (2 U), weight 22 kg	T-SO-910-403
Battery module RM 3.0 kVA, dimensions 440 x 434 x 88 mm (2 U), weight 25 kg	T-SO-910-404
External bypass switch RM	T-SO-910-405
External bypass switch RM, 19" rack mount, 1 U	T-SO-910-406
Rails for 19" rack mounting	T-SO-910-407

POWER SUPPLY SYSTEMS

UPS BATTERY BACKUPS

RT UPS battery backups

Technology . . . . . True On-Line, Double Conversion, VFI-SS-111 (according to EN 62040-3)

Power range . . . . . 5-11 kVA

Phases in/out 1/1

Software . . . . . UPSentry Smart 2000

Typical application:
- servers
- work stations
- graphical stations
- systems in 19" cabinets
- control and automation systems
- medical equipment

Dimensions:
445 x 563 x 130 mm (3 U)
(concerns all UPS and battery modules)

Model	Power rating	Backup time	Specification	Weight	Catalogue number
RT50	5.0 kVA	- 12 min 30 min 50 min	UPS UPS + 1 battery module RT 5.0 kVA, 7 Ah UPS + 2 battery modules RT 5.0 kVA, 7 Ah UPS + 3 battery modules RT 5.0 kVA, 7 Ah	20.5 kg	T-SO-910-500
RT70	7.0 kVA	- 8 min 20 min 32 min	UPS UPS + 1 battery module RT 7.0 kVA, 7 Ah UPS + 2 battery modules RT 7.0 kVA, 7 Ah UPS + 3 battery modules RT 7.0 kVA, 7 Ah	20.5 kg	T-SO-910-700
RT90	9.0 kVA	- 8 min 17 min 26 min	UPS UPS + 1 battery module RT 9.0 kVA, 9 Ah UPS + 2 battery modules RT 9.0 kVA, 9 Ah UPS + 3 battery modules RT 9.0 kVA, 9 Ah	24.5 kg	T-SO-910-900
RT110	11.0 kVA	- 5 min 14 min 22 min	UPS UPS + 1 battery module RT 11.0 kVA, 9 Ah UPS + 2 battery modules RT 11.0 kVA, 9 Ah UPS + 3 battery modules RT 11.0 kVA, 9 Ah	24.5 kg	T-SO-910-910

Accessories	Catalogue number
SNMP module - see page 151	T-SO-910-400
Environmental sensor (requires SNMP module) - see page 151	T-SO-910-401
Wireless signal panel RAM Partner RT	T-SO-910-408
Battery module RT 7.0 kVA, 7 Ah, weight 69.5 kg	T-SO-910-409
Battery module RT 11.0 kVA, 9 Ah, weight 69.5 kg	T-SO-910-410
External uninterruptible bypass RT (wall-mounted)	T-SO-910-411
External uninterruptible bypass RT Rack (19" rack mount)	T-SO-910-422
Fire switch (REPO)	T-SO-910-413
Rails for 19" rack mounting	T-SO-910-407

SNMP card

Catalogue number:
T-SO-910-399 (SNMP card for RA UPS)
T-SO-910-400 (SNMP card for RM and RT UPS)

SNMP InsightPower card is an interface between the UPS and the computer network. The card makes it possible to obtain information about the operating status of the device and execute control commands remotely. Users can easily control the operation of the device using their Internet browser or tools based on SNMP, a popular network management protocol.

The system is complemented by the InsightPowerClient software compatible with the SNMP card. In the event of prolonged power outage, the software automatically shuts down computers working under Windows operating systems. A simpler software version called SNMP ShutdownAgent is capable of working with a wide array of popular system platforms.

Properties and functionalities:
- In-built SNMP agent and HTTP server for UPS monitoring
- Configuration through a terminal or via telnet
- Management of different user rights levels
- Firmware updating option
- UPS monitoring and control
- Recording events and parameters in the card's memory
- UPS starting, restarting and testing programme
- "Wake On LAN" feature for automatic PC start
- Sending e-mail messages and SNMP traps in the event of alarms
- Cooperation with the InsightPower Client software – the Windows platform
- Cooperation with the Shutdown Agent software for shutting down operating systems automatically (support for many leading system platforms).

Sensor of environmental conditions

Catalogue number:
T-SO-910-412 (sensor for RA UPS)
T-SO-910-401 (sensor for RM and RT UPS)

The sensor of environmental conditions makes it possible to monitor climatic conditions inside cabinets:
- temperature
- humidity
- door opening
- possibility of smoke sensor connection

All exceeded parameters are registered in the computer system and visualised on a local or remote computer through the Internet.

Connection of the sensor to the computer requires an SNMP card (see above).

The sensor connected to the SNMP card enables remote monitoring of the state of current parameters of the environment in the cabinet or in the room in which it is installed. Values of different parameters are available after connection via the Internet browser. In the same location, it is possible to preset permitted values of environmental parameters (temperature, humidity) and the status of the remaining sensors (smoke, fire, flooding, access) for the monitored room. If preset values are exceeded, an alarm is triggered.

Sensor for RM and RT UPS

Sensor for RA UPS

POWER SUPPLY SYSTEMS

HIGH-PERFORMANCE UPS

UPS Power Rack o mocy 120 kVA

Power Rack 20-480 kVA power supplies

Power Rack are high-performance server power supplies installed in the 19" rack cabinets. Power Rack's modular design allows replacing live parts and N+X redundancy. Power Rack is a low-cost solution, in both investment and operation. Among double-conversion modular power supplies (true on-line), Power Rack is a state-of-the-art solution, setting a new benchmark for UPS tasked with protecting sensitive equipment.
Monitoring and control of the power supply is implemented via integrated large LCD panel, GSM/SMS module and standard user-friendly management/monitoring software. All components of the power supply mounted in a rack cabinet allow you to configure the UPS as a fully redundant system that makes expansion of UPS power possible. The basic components of the power supply are power modules, system controllers, bypass modules and distribution blocks.

RELIABLE

- Supplying 20 -480 kVA power take-offs (in parallel circuits).
- Modules and systems redundancy.
- Replacement of live parts ensures continuous operation even during maintenance.
- Duplicated power and control systems provide higher reliability.
- Built-in bypass UPS switches - service and emergency one.

MULTI-PURPOSE

- Modular design allows for easy expansion and ensures easy maintenance.
- LCD display supporting several languages.
- Standard communication protocols (SNMP, RS232, Modbus), smart expansion slots, relay volt-free inputs/outputs.
- Allows for adding external battery cabinet to extend the power-up time.

ECONOMIC

- High input power factor (pf > 0.99) and low harmonic distortion (iTHD < 3%).
- Lower installation cost due to the compact size and modular design.
- Energy-efficient operation with maximum performance of 94% reduces operating costs.

POWER SUPPLY SYSTEMS

HIGH-PERFORMANCE UPS

POWER SYSTEM MANAGEMENT SOFTWARE

- remote or local power supply management,
- real-time monitoring, recording and analysis
- programming and planning of activities (e.g. battery test),
- creating reports,
- archiving of all events and actions of users in the database,
- supports RS232, RS485, SNMP, USB, depending on the type of software and solution,
- multilingual interface.

20-120 kVA → 240 kVA → 360 kVA → 480 kVA

CENTRALIZED MANAGEMENT APPLICATIONS:

- Data center solutions
- Telecommunication systems
- Industrial systems
- Computer networks
- Alarm and security systems
- Laboratories
- Medical equipment

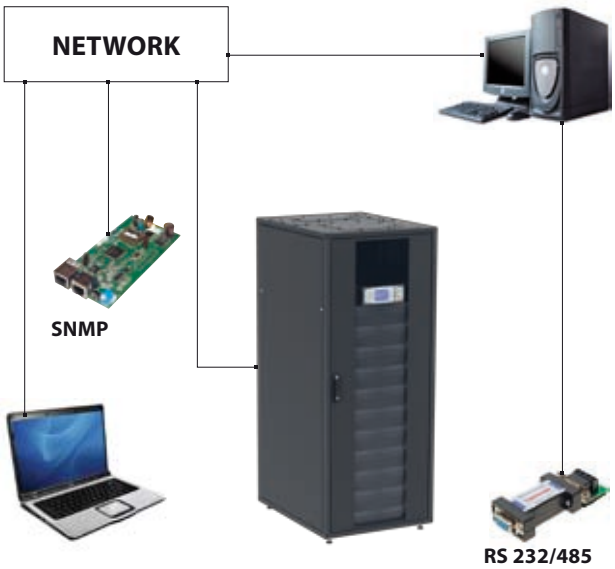

Note:
UPS solutions for high-power systems are selected individually. Our offer also includes UPS in free-standing housing, as well as modular UPS with powers of 10 kVA and 25 kVA.

POWER SUPPLY SYSTEMS

POWER GENERATORS

Power generators

We offer VISA power generators: stationary, mobile, without enclosure or housed in enclosures or containers with sound proofing and resistant to weather conditions, with power ranging from 9 kVA to 2000 kVA. The power generators have diesel engines from Perkins, Deutz, Volvo, John Deere or Mitsubishi and alternators from Marelli or Stamford.

The power generators are equipped with fault-proof automatic systems which activate the generators in the event of power outage in the municipal (industrial) power supply network, as well as accessories enabling the generators to start in any weather conditions. The wide range of power generator accessory options includes remote panels of potential-free contacts, GSM control panels, software enabling control via the Ethernet, RS232, as well as the RS485 port in the Modus protocol.

The power generators have digital panels with large legible LCD displays in a range of options: for manual start-up, for automatic start-up compatible with an outside automatic transfer switching equipment (ATSE) system, for automatic start-up compatible with a dedicated automatic transfer switching equipment (ATSE) system, panels for power generator synchronization with the network and for synchronization of two power generators. Additional equipment options for the engine and the compressor increase the power generator's stability, helping to maintain constant rotational speed regardless of increase in load (i.e. keep up the frequency). AVR and AVR+PMG voltage regulators stabilize the power generator's output voltage and are resistant to sudden load surges from 0 to 100 %.

Additionally, expanding the standard internal tank of the power generator is also possible. This way, without building costly external fuel installations, the generator's operating time can be extended up to 24 hours (depending on the generator's power rating). Obviously, even the expanded fuel tank has a limited volume, being an internal tank placed on the power generator's frame.

We complete power generating systems, as well as any other additional installations required (ventilation, exhaust evacuation and fuel systems with extra fuel tanks).

TABLE LISTING POWER RATINGS OF VISA POWER GENERATORS, DEPENDING ON ENGINE TYPE

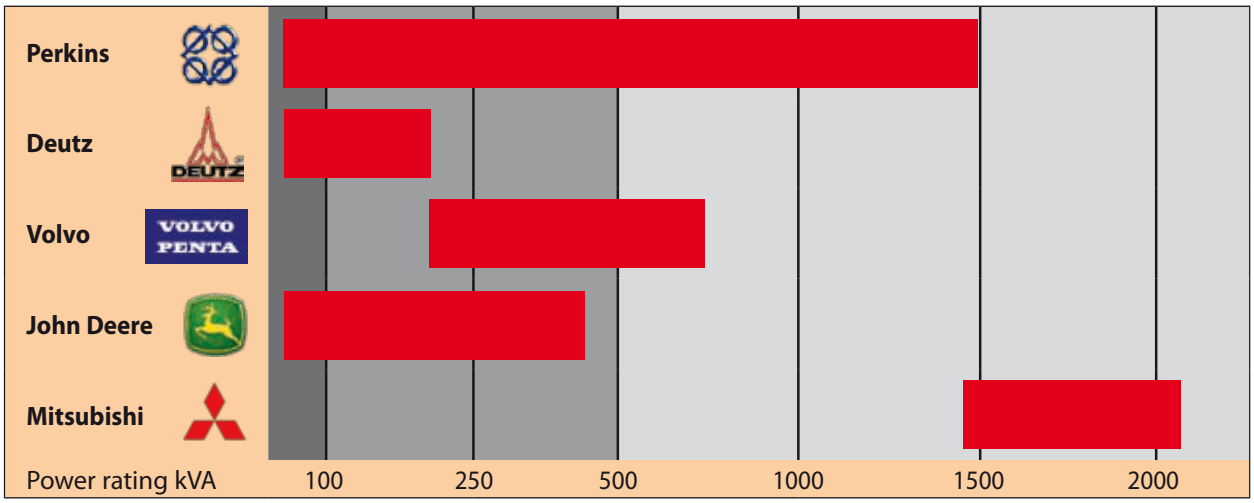

General description of power generators

TECHNICAL SPECIFICATIONS

VISA power generators have diesel engines from Perkins, Deutz, Volvo, John Deere or Mitsubishi and alternators from Marelli or Stamford, mounted on an anti-vibration frame. The power generators can be fully automated to enable a quick start and automatic switching of users in the event of failure in the industrial network. The power generator achieves its rate parameters within 5-15 seconds from the start. The generators can be used as emergency power supply and are compatible with uninterupted power supply (UPS). The generators can be supplied in sound-proof enclosures. The noise level for power generators housed in sound-proof enclosures is 70-80 dB(A). The power generators also come with:

- Guard Evolution Manual control panel for starting the generator manually,
- system for charging the start-up battery during downtime to ensure full readiness for engine start-up at any time,
- integrated internal fuel tank,
- Industrial-type exhaust gas damper,
- start-up batteries,
- oil and coolant,
- electronic rotational speed regulator (depending on engine type).

EXTRA ACCESSORIES

- **Automatic transfer switching system.** Dedicated system for network monitoring and automatic switching of load supply between the network and the power generator.
- **Residential-type exhaust gas damper.** It reduces the noise level by ca. -30 dB(A) from the power generator's own noise level.
- **Coolant heater.** The device heats up the engine block to make sure it starts in any conditions. Supplied with single-phase alternating voltage, the heater has an automatic system built in the control panel.
- **Fuel system.** The majority of power generators have an integrated internal fuel tank. Available are internal tanks of varying capacity featuring automatic or manual filling systems (option: fuel pump) and, if necessary, top/bottom level limit switches (option: 2-contact fuel sensors).
- **Water-tight and sound-proof containers.** All power generator models can be provided with separate water-tight and sound-proof container enclosures. They can be delivered in variants similar to standard containers. Moreover, models with extra sound proofing (up to ca. 50 db(A)/1m) for special applications, e.g. in hospitals, residential districts, etc. are also possible.

ENCLOSURE TYPES

- **C (Cover) –** featuring light sound-proofing and resistant to weather conditions, reducing the noise level by approx. -8 dB(A) from the power generator's own noise emission level and conforming to applicable EU standards.
- **S (Silent) –** sound-proofed and resistant to weather conditions, reducing the noise level by approx. -15 dB(A) from the power generator's own noise emission level and conforming to applicable environmental protection standards.
- **SS (Super Silent) –** extra sound-proofed and resistant to weather conditions, reducing the noise level by approx. -20 dB(A) from the power generator's own noise emission level and conforming to applicable environmental protection standards.

Guard Evolution control panel

Advanced microprocessor and digital control panels for power generators with manual or automatic start-up. The panels make it possible to monitor key power generator parameters such as: voltage, current, frequency, number of hours in operation, oil frequency, battery status etc.

Guard Evolution Manual
Standard manual operating mode with remote control

Guard Evolution Automatic
Standard automatic operating mode with remote control

Guard Evolution Sync
Automatic synchronization of up to 8 power generators operating in parallel as basic or back-up power supply.

POWER SUPPLY SYSTEMS

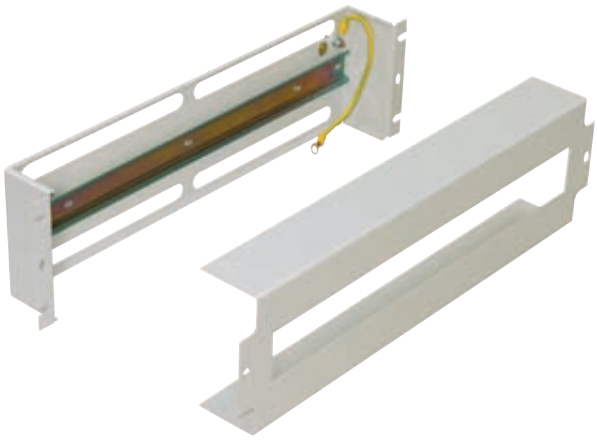

Voltage distribution panel

Voltage distribution panel

Universal 19" enclosure for modular devices.
In the standard version equipped with DIN rail and housing with 402.5 x 45.5 mm opening.

Dimensions:
- height:. . . . . 133 mm (3 U),
- width:. . . . . 19" (internal width: 446 mm),
- depth: . . . . . 60 mm

Capacity of panel - maximum number of built-in S-type modules (width of module 17.5 mm): 22 pcs.

Material:
Sheet steel textured powder painted in light grey (RAL 7035) or black (RAL 9005).

Scope of delivery:
In the standard version, panels are sold as empty enclosures, complete with:
- mounting base,
- DIN rail,
- housing,
- fixing accessories.

Package	Colour	Catalogue number
1 pc.	RAL 7035	WZ-PS3U-00-00-011
	RAL 9005	WZ-PS3U-00-00-161

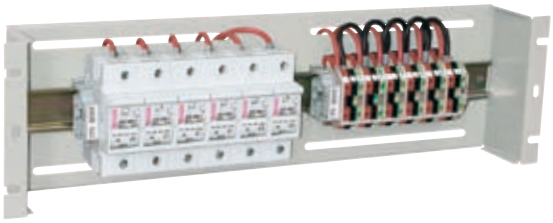

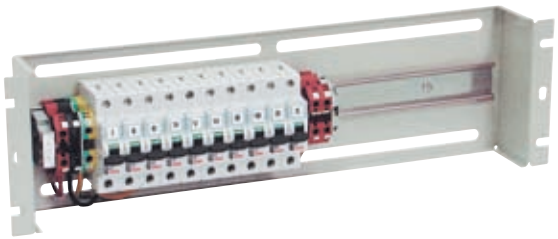

On individual request, the panel can be fitted with electrical equipment in accordance with technical documentation prepared by ZPAS or by the customer.

FIRE EXTINGUISHING SYSTEMS AND IT-ROOMS

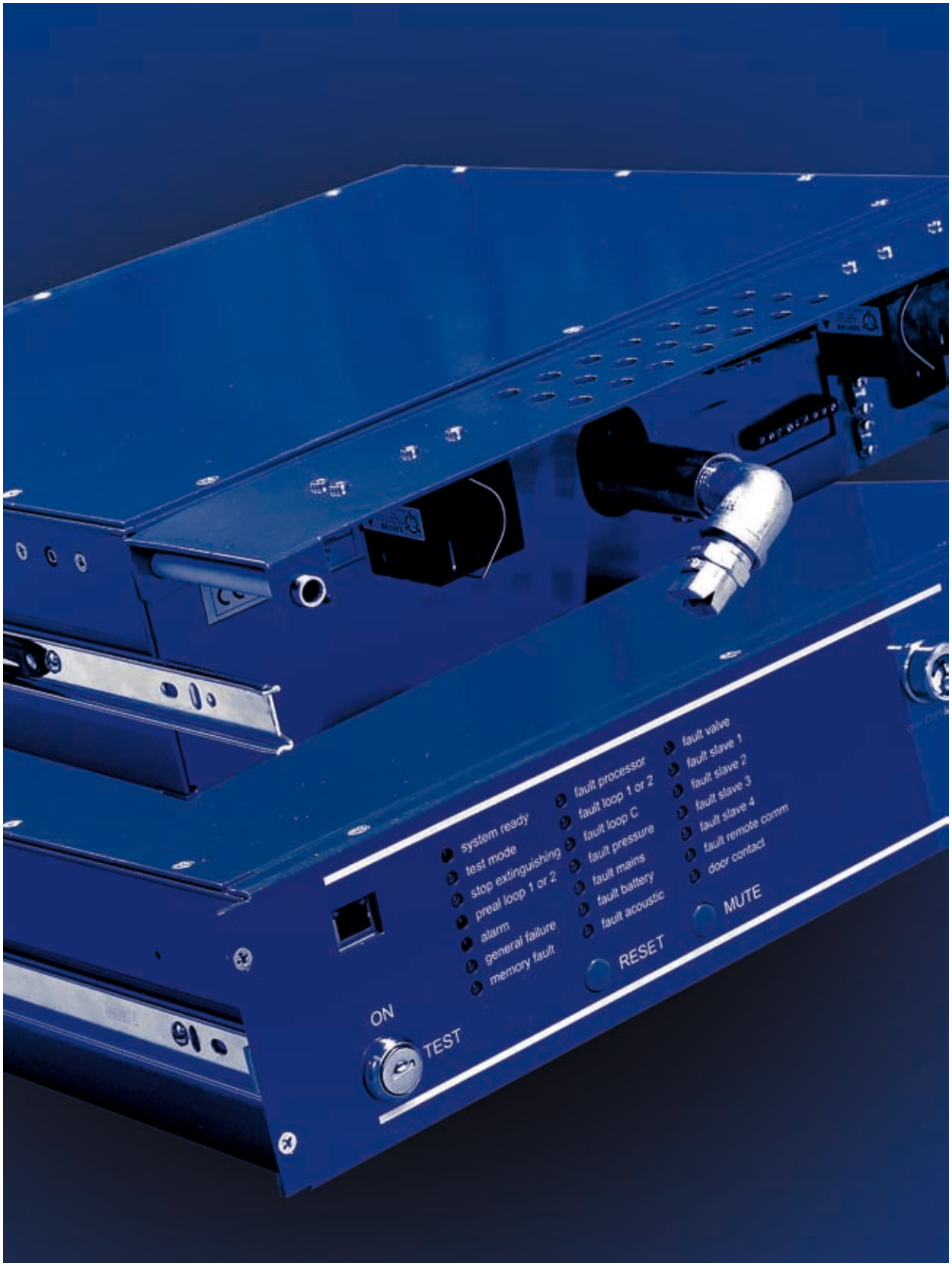

FIRE EXTINGUISHING SYSTEMS AND IT-ROOMS

FIRE EXTINGUISHING SYSTEMS

Panel FK-RACK - widok z przodu

FK-RACK fire extinguisher

DESIGN

FK-RACK is designed as a single monolithic 19" panel, 3 U in height, made up of:
- central fire-extinguishing and fire detection unit
- two optical smoke detectors
- main manifold
- one or two tanks containing 1 kg of fire-extinguishing gas
- solenoid valve
- pressure switch
- fire supply 230 V AC / 24 V DC
- two 12 V batteries
- sounder
- pressure gauge

FK-RACK panel – rear view

OPERATION

FK-RACK, a single-zone automatic fire alarm control panel, is designed for fire detection and control of the fireextinguishing process via the solenoid valve fitted in the main manifold connected to tanks containing FE-36 extinguishing gas. The panel can be fitted in RACK-type server cabinets or automatic control cabinets with a maximum volume of 3 m^3.
The panel is equipped with two optical smoke sensors, each in a separate fire detection line, which analyse air transparency. Following detection of aerosols such as smoke, they activate an appropriate procedure.
An activation of one sensor triggers a sounder and a red LED (PREALARM) lights up in one of the detection lines.
An activation of the other sensor causes the red alarm LED to light up (the PREALARM LED goes out) and the in-built clock starts counting down to the release of the FE-36 extinguishing agent. After 30 seconds, the solenoid valve in the main manifold is opened, releasing FE-36 gas.
Throughout the entire process, the user controls the operation of the panel by means of a range of LEDs and a pressure gauge indicating the pressure level in the manifold. Additionally, pressure is controlled by means of pressure switch placed on the manifold. Any pressure drop makes the orange LED light up.
All electrical circuits of the sensors, solenoid valve and pressure gauge are monitored for continuity. Any interruption of circuit continuity causes a corresponding LED to light up, signalling the fault of a specific element.
In the event of failure of the basic power supply, the central control unit is provided with a battery (2 x 12 V).

Product name	Package	Catalogue number
Fire extinguisher FK-RACK-2 Master with 2 kg of the FE-36 extinguishing agent	1 pc.	T-SO-990-151
Fire extinguisher FK-RACK-2 Slave with 2 kg of the FE-36 extinguishing agent	1 pc.	T-SO-990-154
Cylinder for the fire extinguisher with 2 kg of FE-36, complete with manifold and valve	1 pc.	T-SO-990-156

We offer complete fire protection infrastructure for large and small server rooms. Our services comprise fire extinguishing system design (selection and optimum adjustment to the area being protected), delivery and complete assembly of equipment for fire detection and extinguishing, as well as service and maintenance of the system.

FM-200-based fire extinguishing system

A fire extinguishing system based on FM-200 gas is a decisive element ensuring appropriate fire safety of the premises being protected. Consequently, it should be operated and maintained according to applicable technical construction regulations, standards in place, principles of technical knowledge and relevant documentation.

Components of the fire extinguishing system

1. Smoke detector central unit
2. FM-200 gas cylinders
3. Extinguishing nozzles
4. Fire detectors
5. Smoke extraction system
6. Mechanism for manual deactivation of fire extinguishing
7. Mechanism for manual activation of fire extinguishing

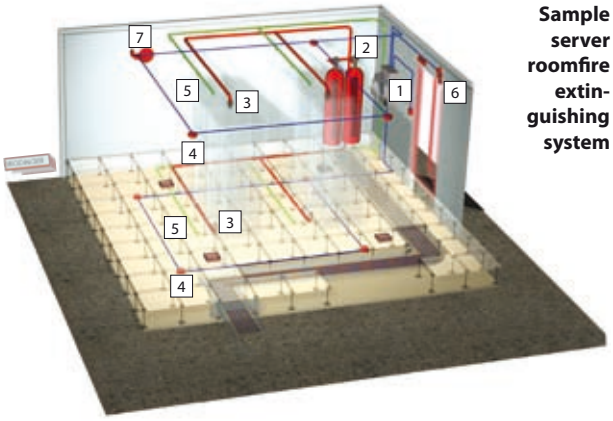

Sample server roomfire extin-guishing system

FM200 is stored in cylinders with special quick opening gas valves. The available range of cylinders holding between 5 and 180 l makes it possible to adjust the required volume of gas in the smallest possible cylinder. Cylinders can be combined into sets connected with a gas manifold. Cylinders are fastened to the wall or another permanent structure with clamps.

Side effects of gas release

The following phenomena accompany the release of FM-200:

- **Blast** – release of several dozen kilograms of gas within a period not exceeding 10 sec. Blast results in strong air currents capable of moving around free-standing office equipment.
- **Noise** – gas release produces noise of relatively high intensity, though without damage to hearing.
- **Mist** – gas release results in the formation of mist around the nozzles, which reduces visibility and disappears a moment after total gas release.

NOVEC 1230-based fire extinguishing system

NOVEC 1230 is stored as liquid and released during emergency as gas. It is a fast-acting extinguishing agent thanks to the combined effect of physical absorption of heat and chemical influence on flames.

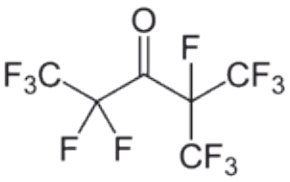

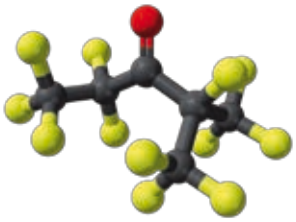

Safe

Independent research has shown that Novec 1230 poses no risk to humans staying in the premises in which the agent is released at the fire extinguishing concentration. In addition, NOVEC 1230 ensures up to 100 % safety margin – much higher than any other pure extinguishing reference agent used in terms of reference.

Effective

NOVEC 1230 extinguishes fire very quickly, before damage is caused. This is possibile due to the fact that the extinguishing concentration is achieved within a maximum of 10 seconds. It is very efficient in extinguishing class A and B fires, as well as fires affecting live equipment.

Pure

NOVEC 1230 is released as a clear, non-conductive and non-corrosive gas. It leaves no remains, which eliminates the problem of removing deposits.

IT-ROOMS

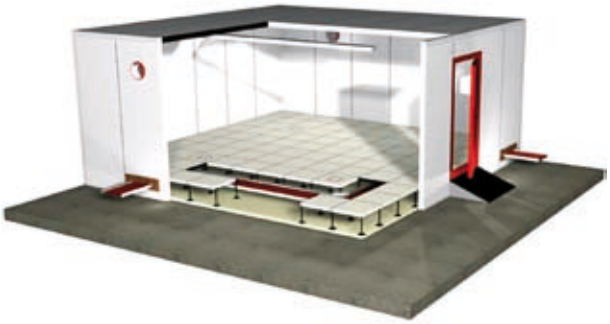

In cooperation with our partners, we deliver complete data processing and storage facilities (data centres, server rooms), including:

- IT-Room booths,
- guranteed power supply,
- precise air-conditioning,
- electronic security systems,
- fire extinguishing systems

IT-ROOM – SAFETY AND SECURITY FOR SERVER ROOMS

The central element of such facilities is the so-called secure storage unit (IT-Room). The design and basic parameters of IT-Rooms are regulated by the Polish Standard PN-EN 1047-2 (a translation of the corresponding European standard). Key parameters ensuring the safety of data and equipment are:

- elimination of electromagnetic emanation,
- protection against electromagnetic and ionizing radiation,
- fire resistance (maintaining the temperature inside the IT ROOM below 70 °C during a fire outside the booth),
- fire resistance (keeping the humidity level inside the IT ROOM below 85 % during a fire outside the booth),
- burglary protection/access control.

As a complete unit, the booth was certified according to the PN-EN 1047-2 standard specifying the stability of operating conditions for ICT equipment during a fire outside. Parameters offered by the booth are much better than those laid down in the standard: the booth maintains the temperature below 30 °C and humidity below 67 % during a fire with a duration of at least one hour.

Safe IT booths have the following basic elements and features:

- structural elements (walls, ceiling, floor, security door, cable ducts, ventilation valves) certified for fire resistance rating of 120 minutes,
- IP 65 protection rating – dust-tight and protected against fire extinguishing water.

SERVER ROOM CABINET INSTALLATION CONCEPTS

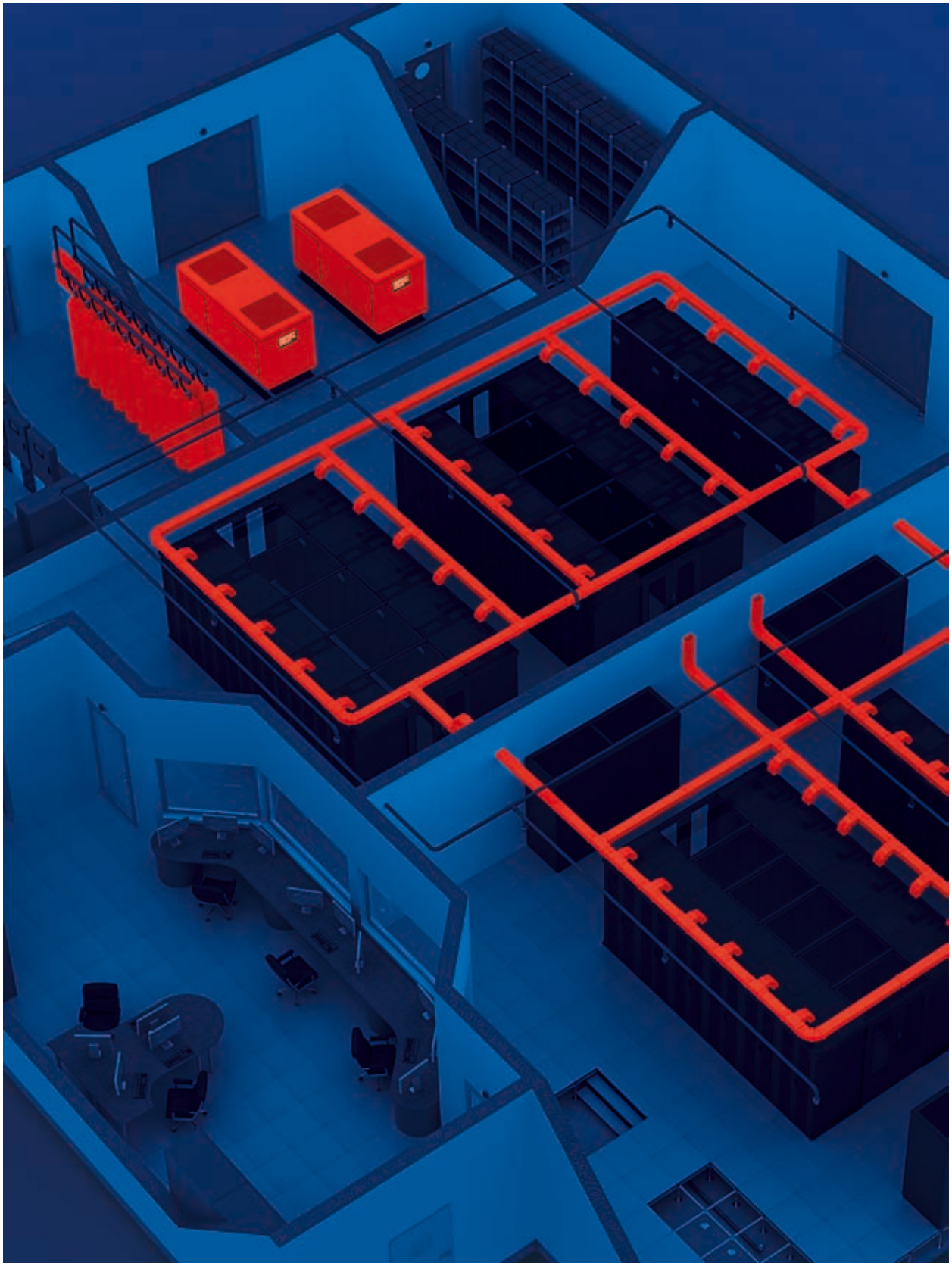

SERVER ROOM CABINET INSTALLATION CONCEPTS

EXAMPLES OF SERVER ROOMS PROJECTS WITH ZPAS CABINETS

Data Box in the server room of ZPAS S.A. facility in Przygórze

SZB DC cabinets installed in the server room of ATM S.A. in Warsaw

ZPAS Data Box installed in Gorzów CHP Station

SZB DC cabinets installed in the server room of ATM S.A. in Warsaw

ZPAS manufactured Data Box installed in server room of Volkswagen Motor Polska company, Polkowice, Poland

ZPAS Data Box installed in eM-I.T. in Bad Ischl, Austria

SERVER CABINETS DC 19"

Intended for use in Data Box and row systems

- The cabinet frame features openings for fixing of the roof and slide door of the cold or hot aisle. The side panels are envisaged with openings for arranging the cabinets in rows.
- Offered in 12 different overall dimensions.
- Expanded configuration system:
  - possibility to join cabinets in a row,
  - easy coding system enables quick configuration of the cabinet.
- Possibility of controlling ventilating air flow by application of proper type of doors as well as additional air flow management solutions (see pages 176-180).
- Complete range of accessory equipment for server cabinets.

1360 kg

TECHNICAL DATA

Material:
Frame, side panels, steel doors, mounting profiles, C-profiles, plinth - sheet steel
Glass door with metal sides - mineral safety glass, sheet steel

Protection degree:
IP 20 in accordance with EN 60529
(does not apply to brush cable entries).

Surface finishing:
Frame, roof, side panels, doors, plinth - powder paint, light grey (RAL 7035) or black (RAL 9005).
All other colour options on request.
Mounting profiles, C-profiles - Al-Zn coated
Outriggers - zamak casting

SCOPE OF DELIVERY

Acc. to the configurator to be found on page 165

INSTRUCTIONS FOR ORDERING DC 19" CABINETS

1. When ordering a DC cabinet, please provide the appropriate **catalogue number according to the system on page 165**, which specifies overall dimensions of the cabinet, types of doors, side panels, roof and base, the layout of mounting profiles or angles, and the colour.
2. The next step is to specify **catalogue numbers of supplementary accessories** (such as blanking plates, power strips, air flow management items, access control elements etc.). Supplementary accessories are delivered in separate packaging together with fixing hardware.

MAXIMUM LOAD CAPACITY FOR DC CABINETS

Base type	Maximum weight of equipment mounted in cabinet
levelling feet	1360 kg
plinth	1360 kg

DC 19" SERVER CABINETS

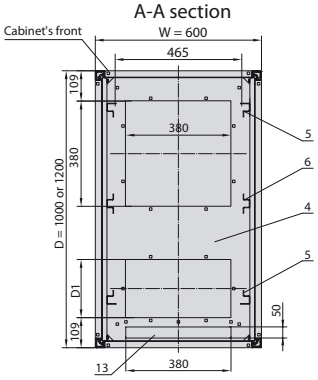

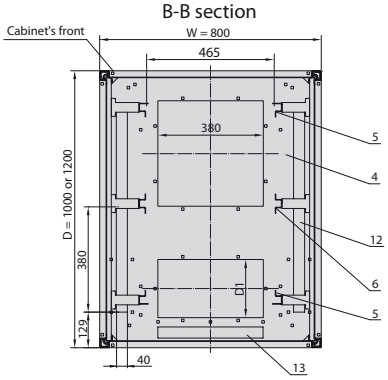

DESIGN

1. Frame's profile
2. Frame's middle profile (only for cabinets 1200 mm in depth)
3. Frame's bottom plate
4. Frame's top plate
5. Mounting profile
6. Middle mounting profile
7. Outrigger
8. Plinth
9. Roof
10. Earthing strip
11. C-profile
12. Knock-out side blanking plate
13. Knock-out rear blanking plate

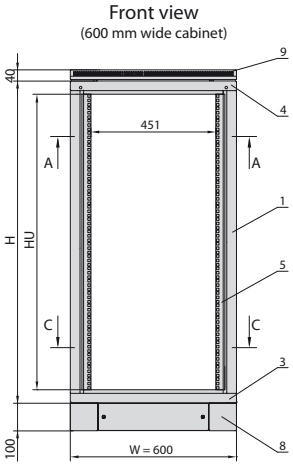

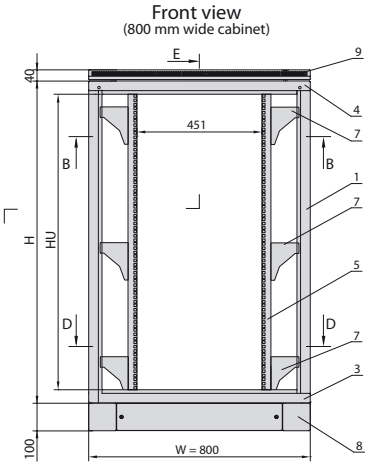

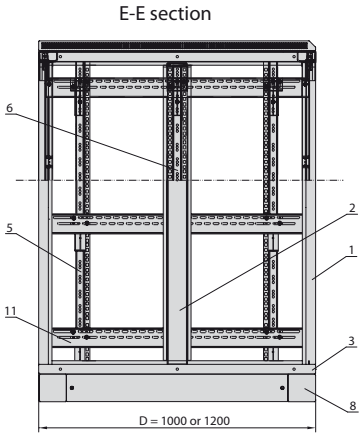

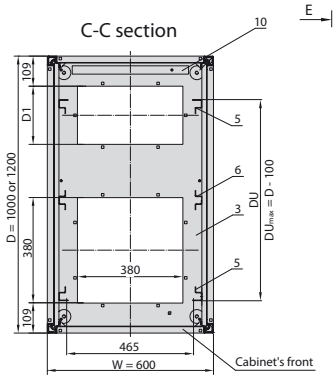

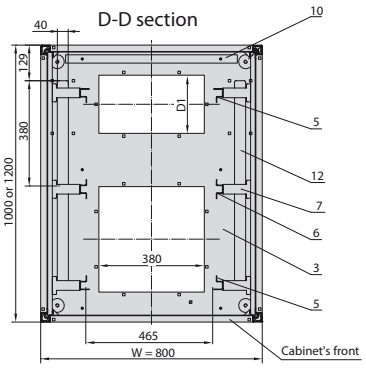

Dimensions [mm]	
D	D1
1000	210
1200	380

Notes:
- The cabinet in the drawing is shown without any panels or doors.
- A wide range of blanking and cable entry plates can be matched with openings in the top and bottom plates and – optionally – in the roof of a cabinet. The 380x40 and 380x50 mm openings are blinded with knock-out blanking plates as a standard.
- Cabinets 1200 mm depth have additional frame's middle profiles (item. 2).

PERFORATION TYPES FOR DOORS

Perforation type B
clearance 69%

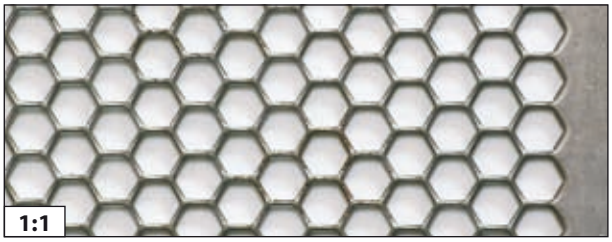

Perforation type C
clearance 80%

SERVER CABINETS DC 19"

REFERENCE CHART

Width W [mm]	Depth D [mm]	Reference number		
800	1000	**1**	**3**	**5**
	1200	**21**	**23**	**25**
600	1000	**2**	**4**	**6**
	1200	**22**	**24**	**26**
Usable height HU [U = 44.45 mm]		47 U	45 U	42 U
Frame height H [mm]		2186	2096	1963

CATALOGUE NUMBER OF DC CABINET

WZ-DC - XXX - XXXX - XX - XXXX - X - XXX

(XXXX: LS | RS; XXXX: F | R | LS | RS)

Reference number
specifies the cabinet's overall dimensions (see reference chart).
Zeroes shall be added before single-digit or double-digit numbers.

Front door types:
0 – without any door
1 – solid steel door
5 – steel door with perforation type C
6 – steel door with perforation type B
7 – steel door with mineral safety glass
8 – steel door with access control*
9 – steel door with perforation type C and access control*
A – steel door with perforation type B and access control*
B – steel door with mineral safety glass and access control*

*) Door with access control is equipped with EsH12 electronic swing handle and holes for mount access terminal. Access terminal is ordered separately. Type of terminal included in our offer were described on page 211.

Rear door types:
0 – without any door
1 – solid steel door
7 – steel door with perforation type C
I – steel door with perforation type B
K – double-wing solid steel door
L – double-wing steel door with perforation type C
M – double-wing steel door with perforation type B
N – solid steel door with access control*
O – steel door with perforation type C and access control*
P – steel door with perforation type B and access control*
R – double-wing solid steel door with access control*
S – double-wing steel door with perforation type C and access control*
T – double-wing steel door with perforation type B and access control*

*) Door with access control is equipped with EsH12 electronic swing handle and holes for mount access terminal. Access terminal is ordered separately. Type of terminal included in our offer were described on page 211.

Cabinet's colours:
011 – RAL 7035 (light grey) 161 – RAL 9005 (black)

Layout of mounting profiles or mounting angles inside the cabinet:
1 – two pairs of 19" mounting profiles and one pair of middle mounting profiles
2 – two pairs of 19" mounting profiles
3 – two pairs of 19" mounting angles

| **F** - FRONT | **R** - REAR | **LS** - LEFT SIDE | **RS** - RIGHT SIDE |

Configuration of plinth sides
Four digits which specify plinth side type.
Four zeros (0000) should be entered for cabinets without a plinth.

Each side can be:
1 – solid
4 – with a brush opening

Base types:
0 – without any base
1 – levelling feet
3 – plinth, 100 mm high

Roof types:
0 – without any roof
1 – standard roof
For a detailed description of roofs, see page 124

| **LS** - LEFT SIDE | **RS** - RIGHT SIDE |

Side panel types:
0 – without any panel
1 – solid steel panel
2 – solid steel panel with openings for baying cabinets in rows
Elements for baying cabinets should be ordered separately - see page 121

Note:
All front and rear doors (exception of doors type 1) are fitted with a rod-lath lock and swing handle.

Access control elements - see page 210

Proximity card
cat. no. M1U-04-0627

Proximity keyring
cat. no. M1U-04-0628

Access terminal with keyboard
PRK6
cat. no. M1U-04-0640
PRK12
cat. no. M1U-04-0304

Access terminal without keyboard
PRK12-BK
cat. no. M1U-04-0305

DATA BOX - COLD/HOT AISLE

Front view

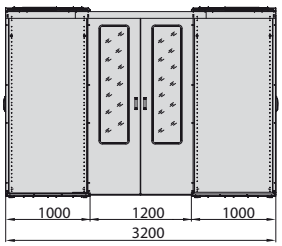

Side view

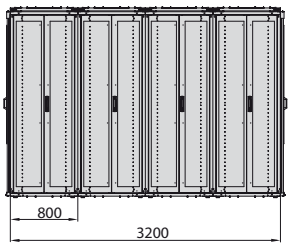

Top view

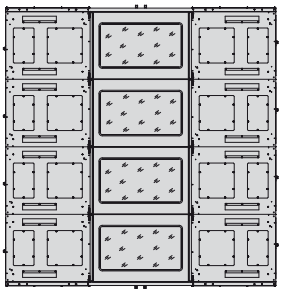

Sample server box consisting of eight DC 47 U cabinets, 800x1000 mm

Due to greater capacity densities of data centers, increased heat generation is observed, resulting in a higher demand for more energy-efficient cooling systems. The majority of data centers provides sufficient cooling capacity but does not have the infrastructure to effectively deliver the cooling medium to high density areas. ZPAS offers cabinet systems with slide doors and roof, making it possible to deliver a data center in the "cold aisle" or "hot aisle" technology. Such solutions physically separate hot air from cold air, thus ensuring efficient cooling for IT equipment.

In "cold aisle" systems, cold air is flown through the access floor into a 120-cm-wide established between rows of cabinets. In the hot aisle system the heat generated by active devices is dissipation to the aisle's space and cold air is provided from the outside of Bata Box. Data Box solution creating space where cold air is completely separated from hot air generated by active devices. Front and rear part of cabinet should have 80 % perforation to provide the best air flow through cabinet. In the Box designed by ZPAS company is possibility to install row heat exchanger. This solution allows for cooling devices with very high power density. Using Data Box solution we raise the safety factor. Your server environment can be protected with electronic access control system, with all the events registered by master PC (see page 210).

DATA BOX - COLD/HOT AISLE

Front view

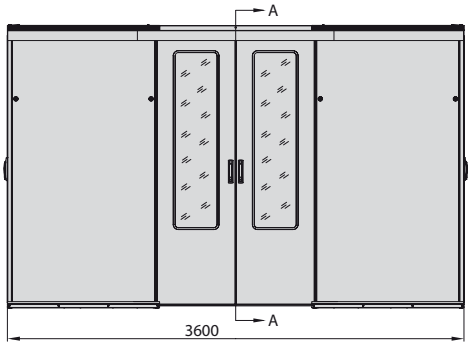

A-A section

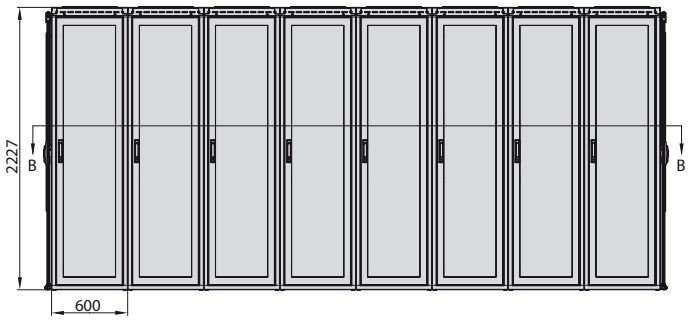

Top view

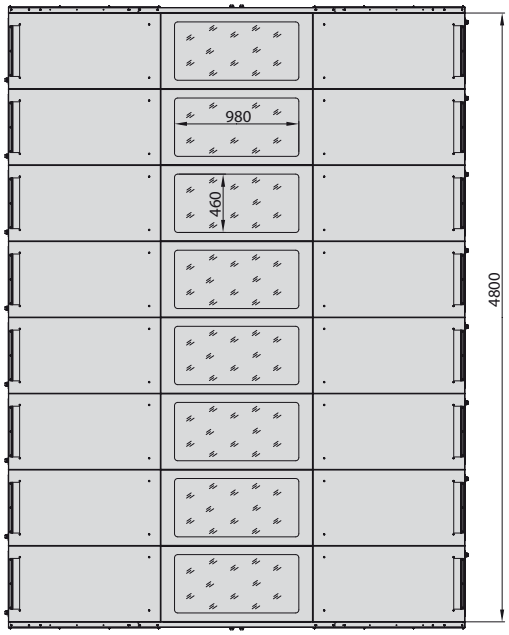

B-B section

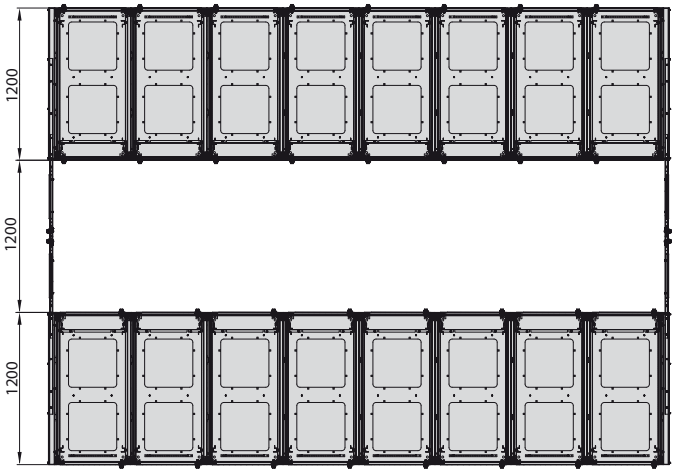

Sample server box consisting of sixteen
DC 47 U cabinets, 600x1200 mm

DATA BOX - COLD/HOT AISLE

1360 kg

Recommended server cabinet configurations for Data Box

In order to ensure proper air circulation inside the cabinet, the front and rear doors should be provided with perforation with clearance of 80%, as well as with additional accessories that prevent air from being dissipated within the cabinet i.e.: blanking plates, vertical masking panels, horizontal brush strips (pages 123-125, 177).

Cabinet configuration:
- front and rear doors with perforation featuring 80%,
- bottom plate and top plate of the cabinet with openings for routing cables and feeding cooling air,
- cabinet dimensions, door handle type and colour to be specified according to the following table and coding system.

SERVER ROOM COOLING IN THE "COLD AISLE" TECHNOLOGY IN A BOX OF CABINETS WITH ROW HEAT EXCHANGERS

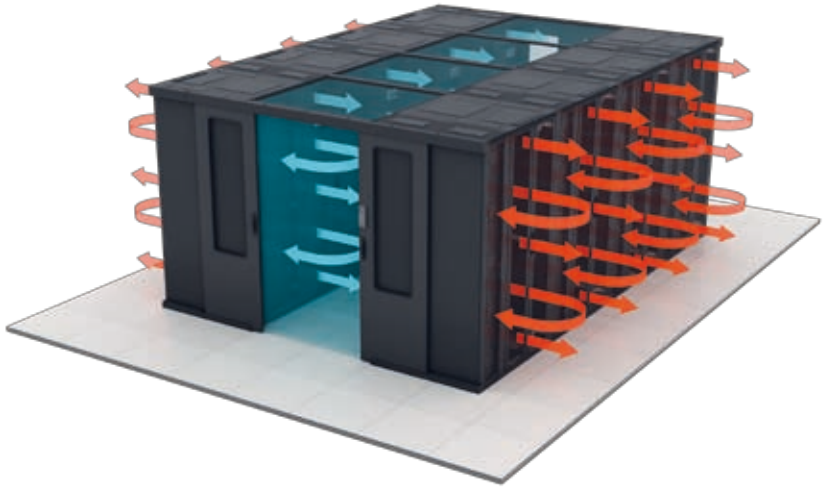

SERVER ROOM COOLING IN THE "HOT AISLE" TECHNOLOGY IN A BOX OF CABINETS WITH ROW HEAT EXCHANGERS

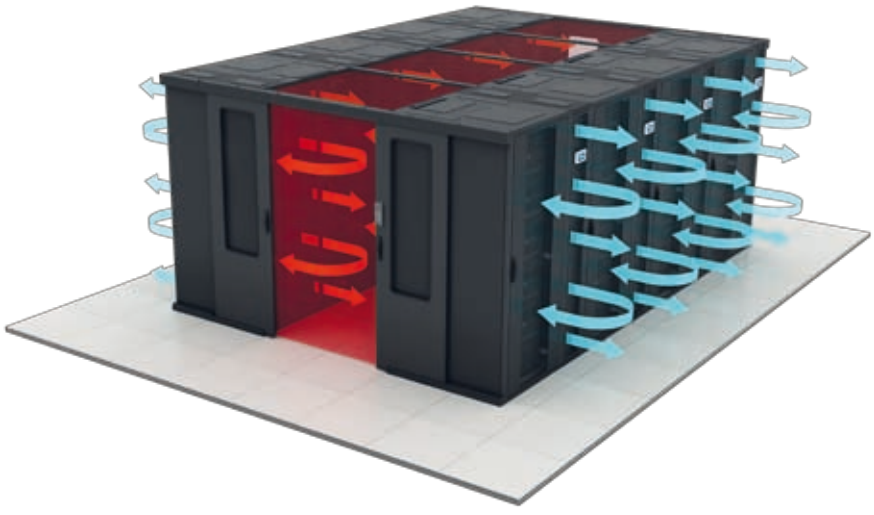

DATA BOX - COLD/HOT AISLE

REFERENCE CHART OF DC CABINETS

Width [mm]	Depth [mm]	Reference number		
800	1000	**1**	**3**	**5**
	1200	**21**	**23**	**25**
600	1000	**2**	**4**	**6**
	1200	**22**	**24**	**26**
Usable height [U = 44.45 mm]		47 U	45 U	42 U
Frame height [mm]		2186	2096	1963

Server room cooling in the "cold aisle" technology with using access floor

CATALOGUE NUMBER OF DC CABINET

WZ-DC - XXX - XXXX - XX - XXXX - X - XXX

(XXXX: LS | RS; XXXX: F | R | LS | RS)

Reference number
specifies the cabinet's overall dimensions (see reference chart). Zeroes shall be added before single-digit or double-digit numbers.

Front door types:
5 – steel door with perforation type C
9 – steel door with perforation type C and access control*

*) Door with access control is equipped with EsH12 electronic swing handle and holes for mount access terminal. Access terminal is ordered separately - see page. 211

Rear door types:
7 – steel door with perforation type C
L – double-wing steel door with perforation type C
O - steel door with perforation type C and access control*
S – double-wing steel door with perforation type C and access control*

*) Door with access control is equipped with EsH12 electronic swing handle and holes for mount access terminal. Access terminal is ordered separately - see page 211

Cabinet's colours:
011 – RAL 7035 (light grey) 161 – RAL 9005 (black)

Layout of mounting profiles or mounting angles inside the cabinet:
1 – two pairs of 19" mounting profiles and one pair of middle mounting profiles
2 – two pairs of 19" mounting profiles
3 – two pairs of 19" mounting angles

| **F** - FRONT | **R** - REAR | **LS** - LEFT SIDE | **RS** - RIGHT SIDE |

Configuration of plinth sides
Four digits which specify plinth side type.
Four zeros (0000) should be entered for cabinets without a plinth.

Each side can be:
1 – solid
4 – with a brush opening

Base types:
0 – without any base
1 – levelling feet
3 – plinth, 100 mm high

Roof types:
0 – without any roof
1 – standard roof

For a detailed description of roofs, see page 124

| **LS** - LEFT SIDE | **RS** - RIGHT SIDE |

Side panel types:
0 – without any panel
1 – solid steel panel
2 – solid steel panel with openings for baying cabinets in rows

Elements for baying cabinets should be ordered separately - see page 121

Note:
All front and rear doors are fitted with a rod-lath lock and swing handle.

DATA BOX - COLD/HOT AISLE

Slide door system for Data Box aisle

A Data Box can be accessed through a double-wing sliding door. Mounted on one or both sides of the Data Box aisle, they ensure safety and physical separation of cold/hot air flows. Slide door is available in three versions: without lock, with machanical lock, and with machanical lock + electronic access control (see page 210). The door is fitted with glass panes for improved control over Data Box interior events..

Material:
Sheet steel powder painted, mineral safety glass

Scope of delivery:
Two-wing sliding door, top guide, two bottom guides, two side panels of the cabinet, fixing accessories.

For Data Box with cabinets		Catalogue number					
		Slide door with an mechanical lock, for 1200 mm wide aisle		Slide door with an mechanical lock and electronic access control, for 1200 mm wide aisle		Slide door without lock for Data Box aisle 1200 mm wide	
height	depth [mm]	RAL 7035	RAL 9005	RAL 7035	RAL 9005	RAL 7035	RAL 9005
42 U without plinth	1000	WZ-5367-01-01-161	WZ-5367-01-01-161	WZ-5367-03-01-161	WZ-5367-03-01-161	WZ-6186-05-03-161	WZ-6186-05-03-161
	1200	WZ-5367-01-04-011	WZ-5367-01-04-161	WZ-5367-03-04-011	WZ-5367-03-04-161	WZ-6186-05-09-011	WZ-6186-05-09-161
45 U without plinth	1000	WZ-5367-01-02-011	WZ-5367-01-02-161	WZ-5367-03-02-011	WZ-5367-03-02-161	WZ-6186-05-02-011	WZ-6186-05-02-161
	1200	WZ-5367-01-05-011	WZ-5367-01-05-161	WZ-5367-03-05-011	WZ-5367-03-05-161	WZ-6186-05-08-011	WZ-6186-05-08-161
47 U without plinth	1000	WZ-5367-01-03-011	WZ-5367-01-03-161	WZ-5367-03-03-011	WZ-5367-03-03-161	WZ-6186-05-01-011	WZ-6186-05-01-161
	1200	WZ-5367-01-06-011	WZ-5367-01-06-161	WZ-5367-03-06-011	WZ-5367-03-06-161	WZ-6186-05-07-011	WZ-6186-05-07-161
42 U + plinth 100 mm	1000	WZ-5367-02-01-011	WZ-5367-02-01-161	WZ-5367-04-01-011	WZ-5367-04-01-161	WZ-6186-05-06-011	WZ-6186-05-06-161
	1200	WZ-5367-02-04-011	WZ-5367-02-04-161	WZ-5367-04-04-011	WZ-5367-04-04-161	WZ-6186-05-12-011	WZ-6186-05-12-161
45 U + plinth 100 mm	1000	WZ-5367-02-02-011	WZ-5367-02-02-161	WZ-5367-04-02-011	WZ-5367-04-02-161	WZ-6186-05-05-011	WZ-6186-05-05-161
	1200	WZ-5367-02-05-011	WZ-5367-02-05-161	WZ-5367-04-02-011	WZ-5367-04-05-161	WZ-6186-05-11-011	WZ-6186-05-11-161
47 U + plinth 100 mm	1000	WZ-5367-02-03-011	WZ-5367-02-03-161	WZ-5367-04-03-011	WZ-5367-04-03-161	WZ-6186-05-04-011	WZ-6186-05-04-161
	1200	WZ-5367-02-06-011	WZ-5367-02-06-161	WZ-5367-04-03-011	WZ-5367-04-06-161	WZ-6186-05-10-011	WZ-6186-05-10-161

Package: 1 set

Versions available on request:
- slide door with automatic self-locking
- electrically operated slide door with automatic locking and unlocking

DATA BOX - COLD/HOT AISLE

Data Box aisle panel

Aisle panel can be mounted on the end of Data Box aisle instead sliding door.

Material:
Sheet steel powder painted, mineral safety glass

Scope of delivery:
Aisle panel with fixing accessories.

For Data Box with cabinets height	Catalogue number			
	Solid panel		Panel with glass	
	RAL 7035	RAL 9005	RAL 7035	RAL 9005
42 U	WZ-5367-60-01-011	WZ-5367-60-01-161	WZ-5367-60-07-011	WZ-5367-60-07-161
45 U	WZ-5367-60-02-011	WZ-5367-60-02-161	WZ-5367-60-08-011	WZ-5367-60-08-161
47 U	WZ-5367-60-03-011	WZ-5367-60-03-161	WZ-5367-60-09-011	WZ-5367-60-09-161
42 U + plinth 100 mm	WZ-5367-60-04-011	WZ-5367-60-04-161	WZ-5367-60-10-011	WZ-5367-60-10-161
45 U + plinth 100 mm	WZ-5367-60-05-011	WZ-5367-60-05-161	WZ-5367-60-11-011	WZ-5367-60-11-161
47 U + plinth 100 mm	WZ-5367-60-06-011	WZ-5367-60-06-161	WZ-5367-60-12-011	WZ-5367-60-12-161

Package: 1 pc.

Data Box aisle roof

Available in modular design. Roof modules are available in four widths, matching the width of server cabinets and row heat exchangers or management cabinets. The roof modules are fixed directly to the top plate of the cabinet.

Material:
Sheet steel powder painted, mineral safety glass

Scope of delivery:
Roof module with fixing accessories.
The selected number of roof modules (N) will be automatically provided with the following mounting accessories:
- (N-1) middle mounting profiles for interconnecting the roof modules (cat. no. WZ-5508-08-00-161 /011),
- 2 side mounting profiles for aisle roof (cat. no. WZ-5508-07-00-161 /011)

Roof width [mm]	Catalogue number	
	RAL 7035	RAL 9005
1100	WZ-5367-20-01-011	WZ-5367-20-01-161
900	WZ-5367-20-02-011	WZ-5367-20-02-161
800	WZ-5367-20-03-011	WZ-5367-20-03-161
600	WZ-5367-20-04-011	WZ-5367-20-04-161

Package: 1 pc.

SERVER CABINETS IN ROWS

Server cabinet configuration with cold/hot air separation

Increasing capacities of data centers generate demand for efficient energy performance in HVAC systems. The greatest challenge in designing data centers is to ensure an optimum operating temperature of IT equipment located in server cabinets along with protection against thermal damage.
The correct temperature in a server room can be achieved by preventing cooling air from mixing with hot air generated by the active equipment running in server cabinets. An easy and efficient remedy to such problems is placing cabinet rows parallel to one another. Opposite cabinets should face one another. Cold air is delivered via the access floor and blown directly in front of server cabinets to create the so-called "cold air zone".

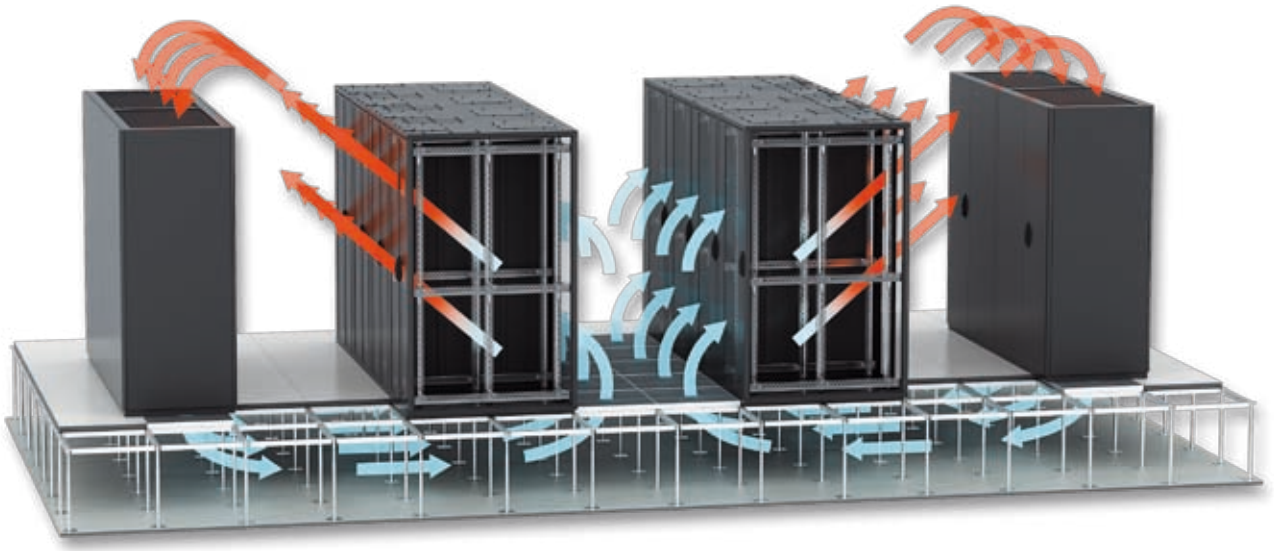

In order to ensure proper air circulation inside the cabinet, the front and rear door should be provided with perforation with clearance of 80%, as well as with additional accessories that prevent air from being dissipated within the cabinet i.e.: blanking plates, vertical masking panels, horizontal brush strips – see pages 123-125, 177.

SERVER CABINETS IN ROWS

CABINET CONFIGURATION:

- front and rear doors with perforation featuring 80%,
- solid side panels,
- bottom plate and top plate of the cabinet with openings for routing cables and feeding cooling air,
- cabinet dimensions, door handle types, base types and colour to be specified according to the following table and coding system.

1360 kg

REFERENCE CHART OF DC CABINETS

Width [mm]	Depth [mm]	Reference number		
800	1000	**1**	**3**	**5**
	1200	**21**	**23**	**25**
600	1000	**2**	**4**	**6**
	1200	**22**	**24**	**26**
Usable height [U = 44.45 mm]		47 U	45 U	42 U
Frame height [mm]		2186	2096	1963

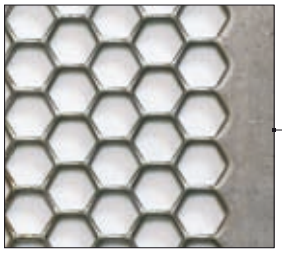

CATALOGUE NUMBER OF DC CABINET

WZ-DC - XXX - XXXX - XX - XXXX - X - XXX

(XXXX: LB | PB; XXXX: P | T | LB | PB)

Reference number
specifies the cabinet's overall dimensions (see reference chart). Zeroes shall be added before single-digit or double-digit numbers.

Front door types:
5 – steel door with perforation type C
9 – steel door with perforation type C and access control*

*) Door with access control is equipped with ESH12 electronic swing handle and holes for mount access terminal. Access terminal is ordered separately - see page 211.

Rear door types:
7 – steel door with perforation type C
L – double-wing steel door with perforation type C
O - steel door with perforation type C and access control*
S – double-wing steel door with perforation type C and access control*

*) Door with access control is equipped with EsH12 electronic swing handle and holes for mount access terminal. Access terminal is ordered separately - see page 211.

Cabinet's colours:
011 – RAL 7035 (light grey) 161 – RAL 9005 (black)

Layout of mounting profiles or mounting angles inside the cabinet:
1 – two pairs of 19" mounting profiles and one pair of middle mounting profiles
2 – two pairs of 19" mounting profiles
3 – two pairs of 19" mounting angles

| **F** - FRONT | **R** - REAR | **LS** - LEFT SIDE | **RS** - RIGHT SIDE |

Configuration of plinth sides
Four digits which specify plinth side type.
Four zeros (0000) should be entered for cabinets without a plinth.

Each side can be:
1 – solid
4 – with a brush opening

Base types:
0 – without any base
1 – levelling feet
3 – plinth, 100 mm high

Roof types:
0 – without any roof
1 – standard roof

For a detailed description of roofs, see page 124

| **LS** - LEFT SIDE | **RS** - RIGHT SIDE |

Side panel types:
0 – without any panel
1 – solid steel panel
2 – solid steel panel with openings for baying cabinets in rows

Elements for baying cabinets should be ordered separately - see page 121

Note:
All front and rear doors are fitted with a rod-lath lock and swing handle.

CLOSED-CIRCUIT COOLING

Server cabinet configuration for closed-circuit cooling

Evolving data center technologies lead to a wider use of blade servers and other high power density systems. High energy demand is in almost direct relation to the volume of heat produced by server rooms, and results in the formation of the so-called "hot-spots". With varied level of generated heat, uniform cooling distribution systems are incapable of providing sufficient performance.
As an alternative, cold air distribution systems are used and their cooling capacity adjusted to the load of a given server cabinet. Side heat exchangers are perfect for such applications. Installed to the side of a server cabinet, they ensure air circulation and deliver cold air directly in front of the active device (side heat exchangers – see page 192).

Recommended server cabinet configurations for applications with the use of side heat exchangers:
In order to ensure proper air circulation inside the cabinet, the front and rear door should be provided without perforation and with all the accessories that prevent air from being directed to certain areas within the cabinet i.e.: blanking plates, vertical masking panels, horizontal brush strips (see pages 123-125, 177).

Server cabinet with a side heat exchanger. Cabinet width: 800 mm, heat exchanger width: 300 mm. Cabinet door with mineral safety glass

CLOSED-CIRCUIT COOLING

Cabinet configuration:
- steel front door solid or with mineral safety glass,
- steel rear door,
- solid side panel,
- top plate and bottom plate of the cabinet with openings for routing cables and feeding cooling air,
- cabinet dimensions, front door and door handle types, base types and colour to be specified according to the following table and drawing.

Server cabinet 600 mm wide with steel door with mineral safety glass

1360 kg

REFERENCE CHART OF DC CABINETS

Width [mm]	Depth [mm]	Reference number		
800	1000	**1**	**3**	**5**
	1200	**21**	**23**	**25**
600	1000	**2**	**4**	**6**
	1200	**22**	**24**	**26**
Usable height [U = 44.45 mm]		47 U	45 U	42 U
Frame height [mm]		2186	2096	1963

Note:
On customer's request is possible to produce server cabinets which provide protection degree equal IP 54.

CATALOGUE NUMBER OF DC CABINET

WZ-DC - XXX - XXXX - XX - XXXX - X - XXX

(XXXX: LB | PB; XXXX: P | T | LB | PB)

Reference number
specifies the cabinet's overall dimensions (see reference chart). Zeroes shall be added before single-digit or double-digit numbers.

Front door types:
1 – steel door
7 – steel door with mineral safety glass
8 – steel door with access control*
B – steel door with mineral safety glass and access control*

*) Door with access control is equipped with ESH12 electronic swing handle and holes for mount access terminal. Access terminal is ordered separately - see page 211.

Rear door types:
1 – drzwi blaszane
K – double-wing solid steel door
N – solid steel door with access control*
R – double-wing solid steel door with access control*

*) Door with access control is equipped with ESH12 electronic swing handle and holes for mount access terminal. Access terminal is ordered separately - see page 211.

Cabinet's colours:
011– RAL 7035 (light grey) 161 – RAL 9005 (black)

Layout of mounting profiles or mounting angles inside the cabinet:
1 – two pairs of 19" mounting profiles and one pair of middle mounting profiles
2 – two pairs of 19" mounting profiles
3 – two pairs of 19" mounting angles

| **F** - FRONT | **R** - REAR | **LS** - LEFT SIDE | **RS** - RIGHT SIDE |

Configuration of plinth sides
Four digits which specify plinth side type.
Four zeros (0000) should be entered for cabinets without a plinth.

Each side can be:
1 – solid
4 – with a brush opening

Base types:
0 – without any base
1 – levelling feet
3 – plinth, 100 mm high

Roof types:
0 - without any roof
1 - standard roof

For a detailed description of roofs, see page 124

| **LS** - LEFT SIDE | **RS** - RIGHT SIDE |

Side panel types:
0 – without any panel
1 – solid steel panel
2 – solid steel panel with openings for baying cabinets in rows

Elements for baying cabinets should be ordered separately - see page 121

Note:
All front and rear doors (exception of doors type 1) are fitted with a rod-lath lock and swing handle.

AIR FLOW MANAGEMENT IN SERVER CABINETS

With increasing power densities of data centers, air flow management in server cabinets is gaining importance. Cooling IT equipment consists in feeding cold air into a cabinet, supplying it to active devices and discharging it out of the cabinet. If hot air being discharged is drawnin and mixed with cold air at device inlets, the cooling air becomes warmer. As a result, overheatingrelated damage in computer devices may potentially occur. To prevent such issues, it is recommended to use proper blanking plates, masking panels, brush strips and air flow facilitation items.

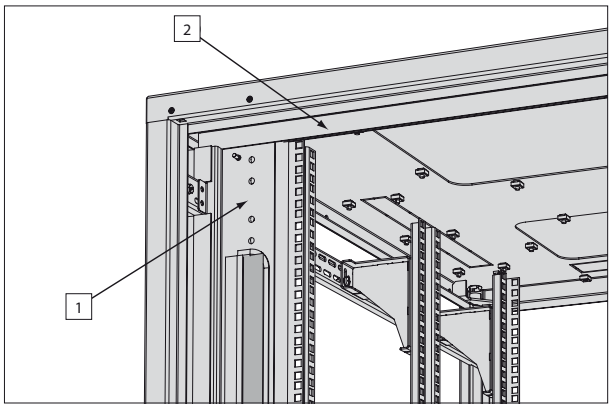

List of elements

1. Vertical masking panel with cable entries (page 177)
2. Horizontal brush strip (page 177)
3. Cold air deflector (page 179)
4. Air flow guide vane (page 178)
5. Vertical hot air duct (page 179)
6. Blanking plate (pages 125)

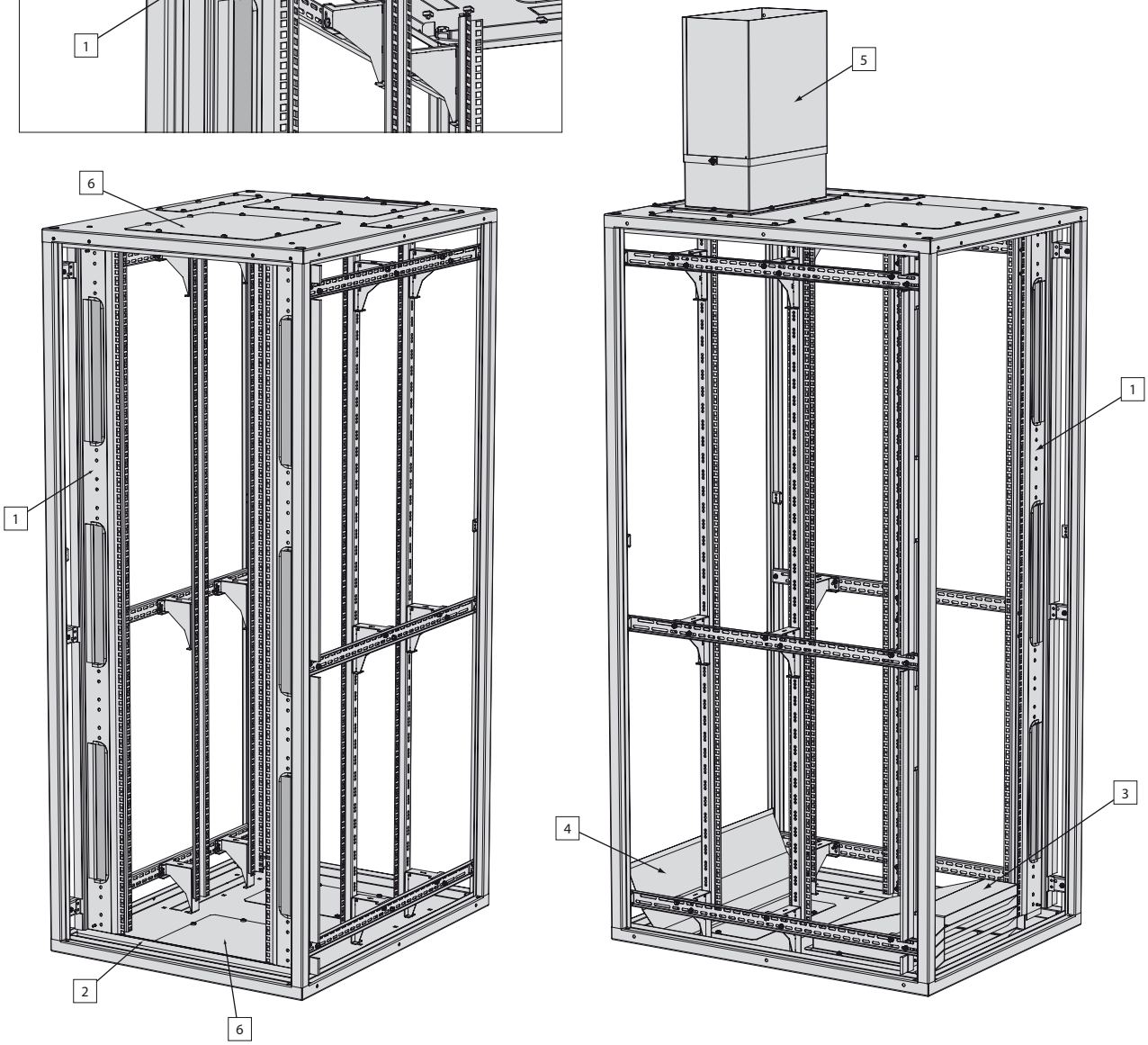

Horizontal brush strips

The horizontal brushes are fitted under and over the working surface of the mounting profiles. They are intended for limiting cold air circulation outside the working zone of the mounting profiles and preventing recirculation of hot air into the cold air inlet.

Material:
Plastic

Scope of delivery
Brush strip – 1 pc.

For cabinet width [mm]	Package	Catalogue number
600	1 pc.	WZ-5367-45-01-000
800	1 pc.	WZ-5367-45-02-000

Vertical masking panels

The vertical masking panels are intended for sealing the space between the mounting profiles and the side panel. They prevent hot air from being fed back into the cold air inlet.

VERSIONS AVAILABLE

For cabinets wide 800 mm:
1. Vertical masking panels with cable entries and openings for fixing cable clamps
2. Vertical solid masking panels with openings for fixing cable clamps

For cabinets wide 600 mm:
3. Vertical solid masking panels

The cable entries in masking panels for 800 mm cabinets are covered with a brush and their edges are protected with an edge seal. All three masking panels types are provided with a brush that, once assembled to the cabinet, fits tight to the side wall.

Material:
Sheet steel powder painted, plastic.

Scope of delivery
A set of 2 vertical masking panels of a given type with fixing accessories.

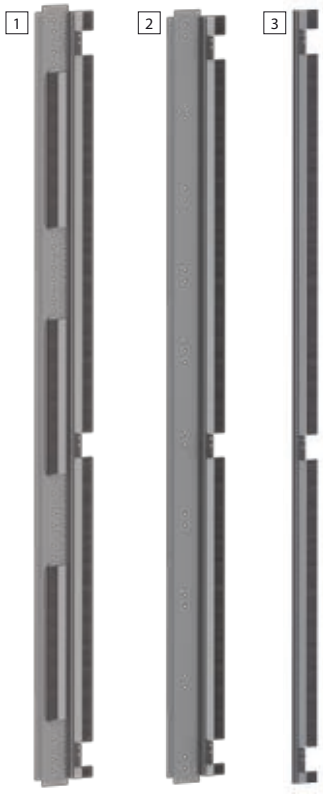

Height [U = 44.45 mm]	Catalogue number					
	For cabinets wide 800 mm				For cabinets wide 600 mm	
	1. Vertical masking panels with cable entries and openings for fixing cable clamps		2. Vertical solid masking panels with openings for fixing cable clamps		3. Vertical solid masking panels	
	RAL 7035	RAL 9005	RAL 7035	RAL 9005	RAL 7035	RAL 9005
47 U	WZ-5367-30-01-011	WZ-5367-30-01-161	WZ-5367-31-01-011	WZ-5367-31-01-161	WZ-5367-32-01-011	WZ-5367-32-01-161
45 U	WZ-5367-30-02-011	WZ-5367-30-02-161	WZ-5367-31-02-011	WZ-5367-31-02-161	WZ-5367-32-02-011	WZ-5367-32-02-161
42 U	WZ-5367-30-03-011	WZ-5367-30-03-161	WZ-5367-31-03-011	WZ-5367-31-03-161	WZ-5367-32-03-011	WZ-5367-32-03-161

Package: 1 set = 2 pc

AIR FLOW MANAGEMENT IN SERVER CABINETS

Air flow guide vane

Located at the back of a cabinet, it facilitates the natural flow of hot air generated by an active device towards the top of the cabinet. The vane should be used with "a vertical hot air duct" located on the top plate of the cabinet in order to feed hot air out of the cabinet (via a separate duct) to the air conditioning unit.

Material:
Sheet steel powder painted

Scope of delivery
Vane with fixing accessories.

For cabinet width [mm]	Catalogue number	
	RAL 7035	RAL 9005
600	WZ-5367-33-02-011	WZ-5367-33-02-161
800	WZ-5367-33-01-011	WZ-5367-33-01-161

Package: 1 pc.

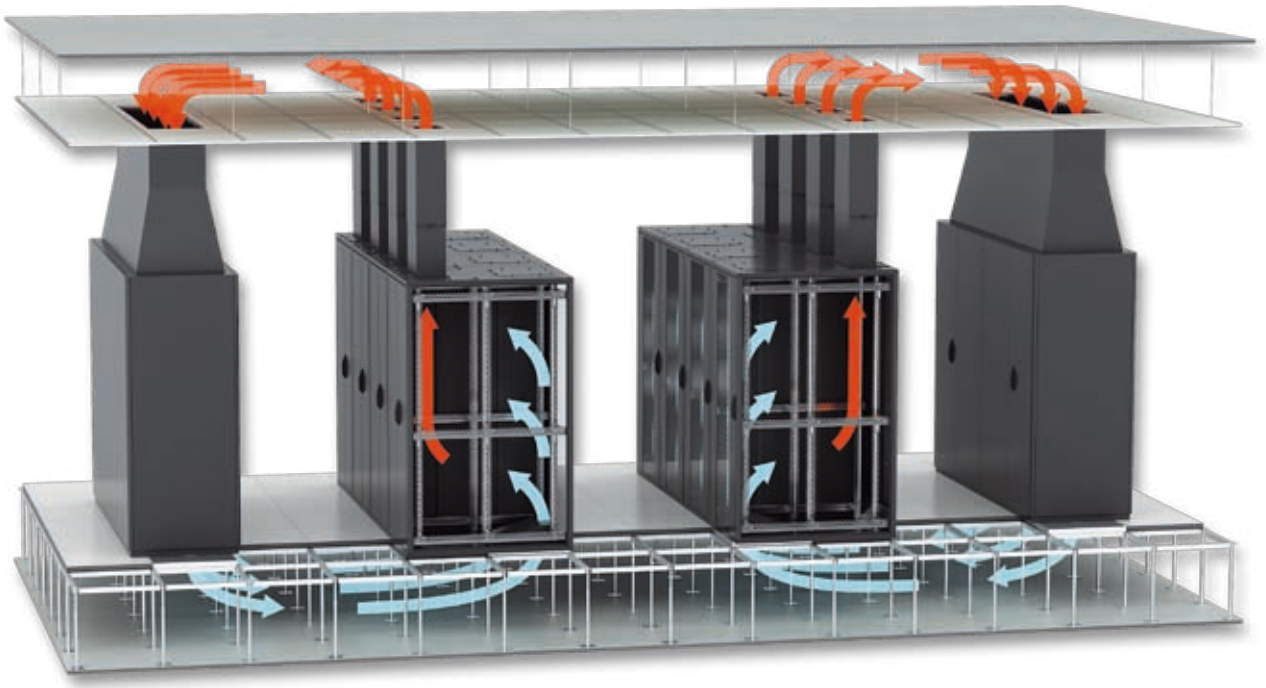

Vertical hot air duct

Located on the top plate of the cabinet. It forms a channel for hot air flowing between the cabinet and the hot zone. Its modular design allows for height adjustments within a range of 750-1360 mm.

Material:
Sheet steel powder painted

Scope of delivery
Vertical duct with fixing accessories.

Package	Colour	Catalogue number
1 pc.	RAL 7035	WZ-5367-35-00-011
1 pc.	RAL 9005	WZ-5367-35-00-161

Cold air deflector

The deflector is located on the bottom plate of the cabinet in a spot where cold air is fed from the access floor. It directs the cold air stream towards the front of the cabinet (an area between the front door and the front of active devices). It is suitable for use with cabinets of 600 mm or 800 mm in width and 1000 mm or 1200 mm in depth.

Material:
Sheet steel powder painted

Scope of delivery
Deflector with fixing accessories.

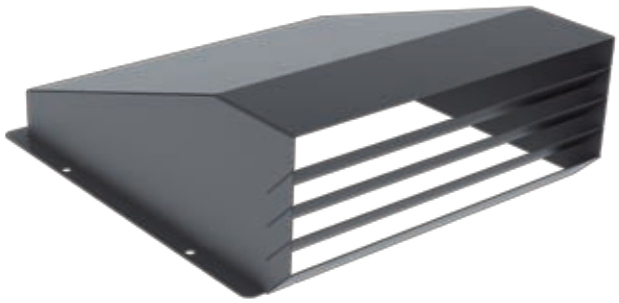

Package	Colour	Catalogue number
1 pc.	RAL 7035	WZ-5367-40-00-011
1 pc.	RAL 9005	WZ-5367-40-00-161

AIR FLOW MANAGEMENT IN SERVER CABINETS

Air flow guides

Given their design and configuration options, active devices with lateral air flow require special approach in terms of the cool air flow. Special design of elements directing air flow and server racks adapted to the technical specifications of active devices and the manufacturer's instructions ensure optimum working environment.

Once we have the specification of network devices with lateral air flow to be installed in our cabinet, we will provide you with the best solution.

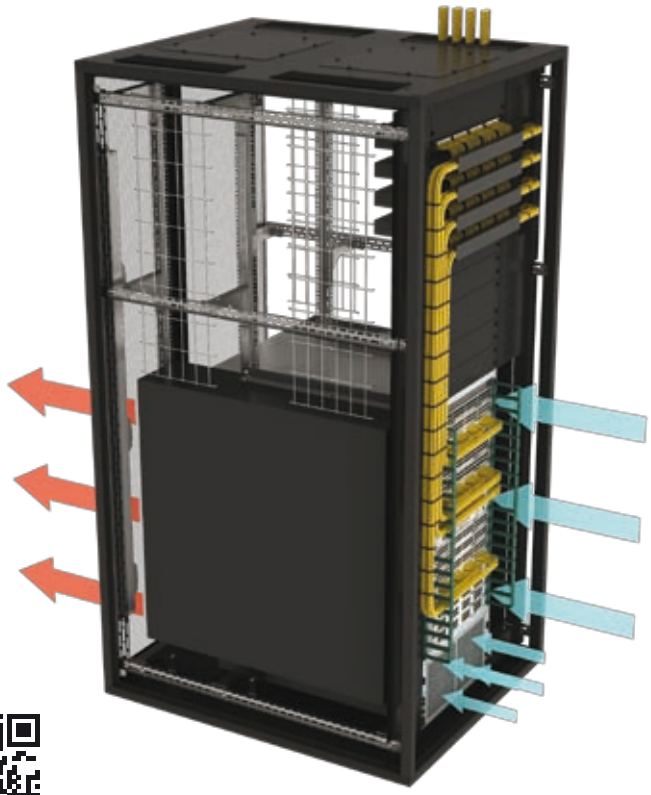

47U 1000x1200 mm server cabinet with Cisco NEXUS network device and air flow guides

VENTILATION AND AIR-CONDITIONING SYSTEMS

VENTILATION AND AIR-CONDITIONING SYSTEMS

VENTILATION SYSTEMS

PW-1.2T

PW-1.3T

PW-2.4T

PW-2.6T

Fan units are equipped with fan mode switch:
I - continuous work,
0 - fans disabled,
II - thermostat control.
Includes socket for thermostat connection. Thermostat is ordered separately.

PW fan units - 19" asembly

Fan units 1 U high, intended for assembly on 19" mounting profiles or in 19" swing frames.

TECHNICAL DATA:

Parameter	Type of fan unit			
	PW-1.2T	PW-1.3T	PW-2.4T	PW-2.6T
Power supply	230 V, 50 Hz			
Rated current [A]	0.28	0.42	0.56	0.84
Number of fans	2	3	4	6
Power rating [W]	44	66	88	132
Capacity [m^3/h]	330	495	660	990
Ambient temperature [°C]	from -10 to +70			
Relative humidity [%]	from 20 to 80			
Protection degree	IP 20			
Electric shock protection	neutralization			

Material of enclosure:
Rear part - sheet steel, front panel - sheet aluminium

Enclosure colour:
Light grey (RAL 7035) or black (RAL 9005)

Scope of delivery:
Fan unit with power supply cable without plug and with fixing accessories.
Thermostat is ordered separately - see below.

Type of fan unit	Number of fans	Depth [mm]	Catalogue number	
			RAL 7035	RAL 9005
PW-1.2T	2	180	WZ-5606-25-02-011	WZ-5606-25-02-161
PW-1.3T	3	180	WZ-5606-05-02-011	WZ-5606-05-02-161
PW-2.4T	4	350	WZ-5606-35-02-011	WZ-5606-35-02-161
PW-2.6T	6	350	WZ-5606-10-02-011	WZ-5606-10-02-161

Package: 1 pc.

Thermostat for PW fan units

KTS 1141 thermostat with cable and plug.
Detailed description of the thermostat: see page 189.

Package	Catalogue number
1 pc.	WN-0201-12-00-000

PWD and PD roof fan units

PWD-4W and PWD-2W fan units are intended for assembly to 380 x 380 mm openings which are located in the top plates of SZB, OTS1, SZB SE nad DC cabinets. The PD-2W fan unit can be assembled to the 380 x 210 mm opening in the top plate of SZB SE and DC cabinets.
In the standard version, the units are equipped with 2 or 4 fans, an illuminated switch and a fuse.

PWD-4W

PWD-4W with integrated thermostat

PWD-2W

PD-2W

TECHNICAL DATA:

Parameter	Type of fan unit		
	PWD-4W	PWD-2W	PD-2W
Power supply	230 V, 50 Hz		
Rated current [A]	0.56	0.28	0.28
Number of fans	4	2	2
Power rating [W]	88	44	44
Capacity [m^3/h]	660	330	330
Ambient temperature [°C]	from -10 to +70		
Relative humidity [%]	from 20 to 80		
Protection degree	IP 20 (refers to fan units mounted in the cabinet)		
Electric shock protection	neutralization		

Material of enclosure:
PWD-4W and PWD-2W fan units - plastic
PD-2W fan unit - sheet steel

Enclosure colour:
Light grey (RAL 7035) or black (RAL 9005)

Scope of delivery:
Fan unit with power cable (without plug) and fixing accessories.

Fans used in fan units:
PW, PWD and PD fan units are provided with high quality fans with ball bearings.

TECHNICAL DATA OF ONE FAN:

- voltage rating ..... 230 V
- frequency ..... 50 Hz
- power rating ..... 22 W
- rated current ..... 0.14 A
- speed of rotation 2850 1/min
- level of noise ..... ca. 45 dB
- pressure ..... 75 Pa
- capacity ..... 165 m^3/h
- durability ..... min. 50 000 h
- dimensions ..... 119 x 119 x 38 mm

Type of fan unit	Number of fans	For opening's dimensions [mm]	Possibility of controlling fan units by MPSK G0* panels	Catalogue number	
				RAL 7035	RAL 9005
PWD-4W	4	380 x 380	YES	WN-0200-06-01-011	WN-0200-06-01-161
PWD-4W with integrated thermostat	4	380 x 380	NO	WN-0200-06-04-011	WN-0200-06-04-161
PWD-2W	2	380 x 380	NO	WN-0200-07-01-011	WN-0200-07-01-161
PD-2W	2	380 x 210	NO	WN-0200-03-00-011	WN-0200-03-00-161

Package: 1 pc.

*) Microprocessor panel for fan control - see page 187.

VENTILATION SYSTEMS

PWS2 fan mounted on SZB SE server cabinet

PWS2 roof fan

The PWS2 fan is designed for high-ventilation demand cabinets installed in areas with low noise level requirements.
It emits more than one third less noise and saves up to 60 % of energy when compared with PWD-4W four-fan ventilation roof panel.
Mechanically, it is adapted for mounting in 380 x 380 mm standard hole which is located in the top plate of SZB, OTS1, SZB SE, DC and SZE2 cabinets. The fan can be connected directly to the 230 V AC grid or via a speed controller which can adjust air flow and thus the noise. The fan is covered with a steel grille as standard. Optionally, it can be fitted with a discharge stack for connecting it to the customer's air ducts.

Design:
Rotor and the fan plate are made of RAL 9005 sheet steel. The fan uses a single-phase asynchronous motor with built-in thermal protection.

PWS2 fan can be controlled with:
- KTS thermostat (see page 189)
- ARO 0.6 speed controller (see page 186)
- MPSK G0 microprocessor panel for fan control (see page 187)
- MPSM-S1 microprocessor power control panel (see page 142)

Technical data:

Supply	230 V, 50 Hz
Power	0.088 kW
Maximum speed	1350 RPM
Operating parameters at maximum speed:	
Efficiency	3600 m^3/h
Compression	58 Pa
Noise	64 dB
Ambient humidity	20 up to 85 %
Permissible temperature of forced air	-20 up to +80 °C
Motor protection class	IP 44
Body protection class	IP 20
External dimensions (H x W x D)	182 x 405 x 405 mm

Scope of delivery:
Fan with power cord without plug, protective grille and fixing accessories for mounting on top of a cabinet, installation and operating instructions.

Product name	Package	Colour	Catalogue number
PWS2 roof fan	1 pc.	RAL 9005	WZ-6647-30-00-161

PWS2 FAN EFFICIENCY AND NOISE LEVEL

Noise is generated in fans both mechanically and aerodynamically.
The mechanical method mainly depends on the fan rotational speed.

Noise level is a derivative of speed. By reducing the speed of the rotor, you can limit the noise emission significantly. PWS2 fan with max. efficiency of 3600 m³/h at rated speed of 1350 RPM emits noise of 64 dB. By reducing the rotational speed, let us say, by half, you get air flow of approximately 1800 m³/h and noise emissions below 38 dB, making the device virtually inaudible.

The actual noise generated by the fan increases logarithmically. The increase in noise by one decibel is, in fact, an increase of 26 % compared to the previous state. So noise increases twofold average every 3 dB. By slowing the fan down to the minimum speed, the noise generated is almost inaudible. This fan is ideal for office applications.

The scale of noise with sample sound sources:
0 dB – threshold of audibility
10 dB – leaves rustling in a mild breeze
20 dB – whisper
30 dB – very quiet street with no traffic
40 dB – murmur in the house
50 dB – noise in offices
60 dB – vacuum cleaner
70 dB – inside a loud restaurant, tearing a paper, inside a car

NOISE EMISSION

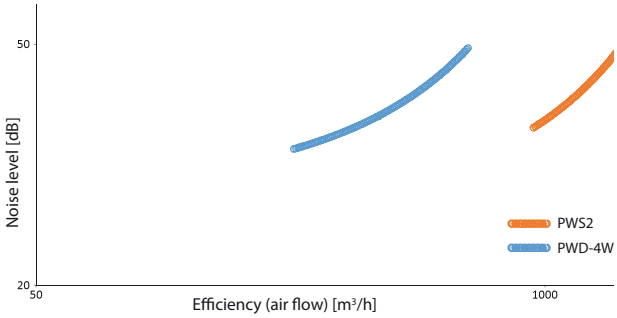

PWS2 fan emits more than one third less noise than the PWD-4W ventilation panel.

PRESSURE

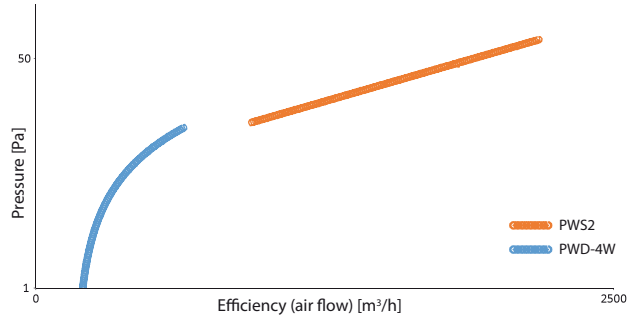

Compared to PWD-4W ventilation panel, PWS2 fan generates as much as twice higher pressure with airflow being 5 times higher.

ENERGY CONSUMPTION

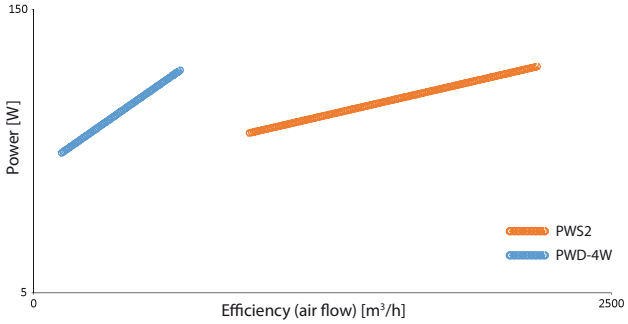

With more than twice higher air flow, PWS2 fan saves up to 60 % energy.

VENTILATION SYSTEMS

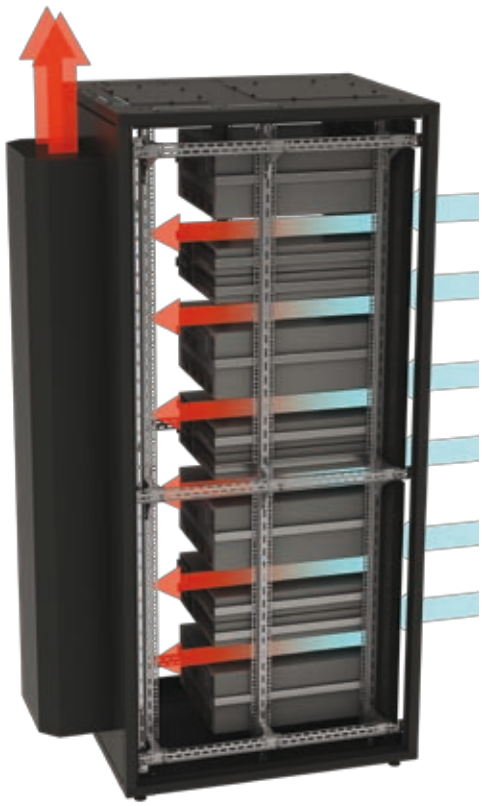

Server cabinet with ventilated rear door

Ventilated door

Ventilated door effectively enhance heat dissipation from server cabinets with the use of three fans. Given their intended use, ventilated door is mounted on the back of the server cabinet, and for safety reasons fans are located in a special enclosure, discharging air to the top.

Enclosure material:
Powder-painted steel sheet

Scope of delivery:
Complete door with a set of fans.

For cabinet		Catalogue number	
heigt	width	RAL 7035	RAL 9005
42 U	800	WZ-3174-03-02-011	WZ-3174-03-02-161
	600	WZ-3174-03-01-011	WZ-3174-03-01-161
45 U	800	WZ-3174-03-04-011	WZ-3174-03-04-161
	600	WZ-3174-03-03-011	WZ-3174-03-03-161
47 U	800	WZ-3174-03-06-011	WZ-3174-03-06-161
	600	WZ-3174-03-05-011	WZ-3174-03-05-161

Package: 1 pc.

ARO 0,6 speed controller

ARO 0.6 autotransformer controller is used to manually adjust speed of the PWS2 fan. It has 2nd insulation class and IP-52 protection class, max. ambient temperature is 40 °C, whereas thermal insulation class B (130 °C).
It has five-step transformer speed control so you can adjust the fan speed and also the noise generated by the PWS2 fan. The first 4 control steps are designed to achieve a compromise between performance and noise, while with the 5th step you can make use of fan's full power. The controller is very well matched to supply network and the fan (no adverse impact on the grid). It has a resettable thermal switch (90 °C).
Made in line with PN-EN 61558-2-13. To be mounted on a mounting plate or on the DIN rail. The controller can be mounted on 19" mounting profiles with PS-3U panel (see page 156; PS-3U panel not included in the controller's scope of delivery).

TECHNICAL DATA

Supply . . . . . .230 V, 50 Hz
Current . . . . . .0.5 A

Scope of delivery:
- ARO 0.6 controller,
- operating manual.

Product name	Package	Catalogue number
ARO 0,6 speed controller	1 pc.	WZ-6647-30-01-000

MPSK G0
microprocessor panel for fan control

Application:
Microprocessor panel for fan control is designed for measurement, control and automatic cabinet temperature maintenance at the pre-set threshold in 19" cabinets.

Principle of operation:
Panel temperature sensor continuously monitors and compares current temperature with pre-set threshold value, and causes switch on the fans of alternating current in four sequences.

Function possibilities:
- continuous temperature measurement,
- automatic fan selection for maintenance of pre-set parameters,
- possibility of service from PC by using RS 232 interface (data transmission in both directions),
- memory storage of pre-set parameters in case of power supply interruption.

Scope of delivery:
Microprocessor panel for fan control, temperature sensor with 2 m cable, fixing accessories.

Software for communication with the MPSK G0 panel via a serial port can be downloaded from our web site at www.zpas.pl

MPSK G0 mikroprocessor panel for fan control

Product name	Package	Colour	Catalogue number
MPSK G0 microprocessor panel for fan control with temperature sensor	1 set	RAL 7035	WZ-SB66-00-00-011
		RAL 9005	WZ-SB66-00-00-161

TECHNICAL DATA:

Temperature measurement:
- measurement range from +5 °C to +80 °C,
- indication resolution ±1 °C,
- measuring accuracy ±1°C.

Setting parameters:
- control range of pre-set temperature threshold value from ±5°C to +80°C,
- tolerance range from the temperature threshold value from +1 °C to +10 °C,
- delay range of switching on/off fans from 1 s to 99 s,
- recovery time from the setting function to measurement: 10 s.

Displaying of measuring parameters:
Two-digit module LED:
- digits' height 14 mm,
- green colour,
- improved quality.

Housing form:
- 19" panel 1 U height, light grey colour (RAL 7035) or black (RAL 9005).

Communication protocol with computer:
Parameters of RS 232 interface:
- transmission speed rate 9600 b/s,
- 8 bits, without even parity bit,
- 1 stop bit.

Temperature sensor:
Miniature, fixed to metal structure by means of latch, cable length - 2 m.

Fan connections:
- number of inputs - 4 mikroprocesorem,
- power supply - 230 V, 50 Hz,
- input's power carrying capacity - 100 W.

Power supply of the panel: 230 V; 50 Hz
Max. power consumption: 2 W

VENTILATION SYSTEMS

MFR 012i hygrostat

Hygrostat

Electric regulator of humidity controls air humidity, switches on fans, heaters or air conditioning units.

TECHNICAL DATA

- Measuring range:
  50-100 % of relative humidity
- Measuring accuracy:
  ±3% of relative humidity
- Operating range:
  50-90% of relative humidity
- Deviation of switching referred to 50 % of relative humidity:
  about 4% of relative humidity
- Maximum voltage:
  250 V AC.
- Minimum load:
  100 mA 20 V DC/AC
- Maximum load:
  resistive 5 A 230 V
  inductive cos q = 0.8: 0.2 A 230 V AC
  inductive L/R = 3 ms: 1 A to 50 V DC
  0.5 A to 75 V DC

Scope of delivery:
- hygrostat MFR 012i,
- DIN rail,
- two holders,
- two screw clampse.

Hygrostat	Package	Catalogue number
MFR 012i	1 pc.	WN-0201-03-00-000/A

CONNECTION DIAGRAM

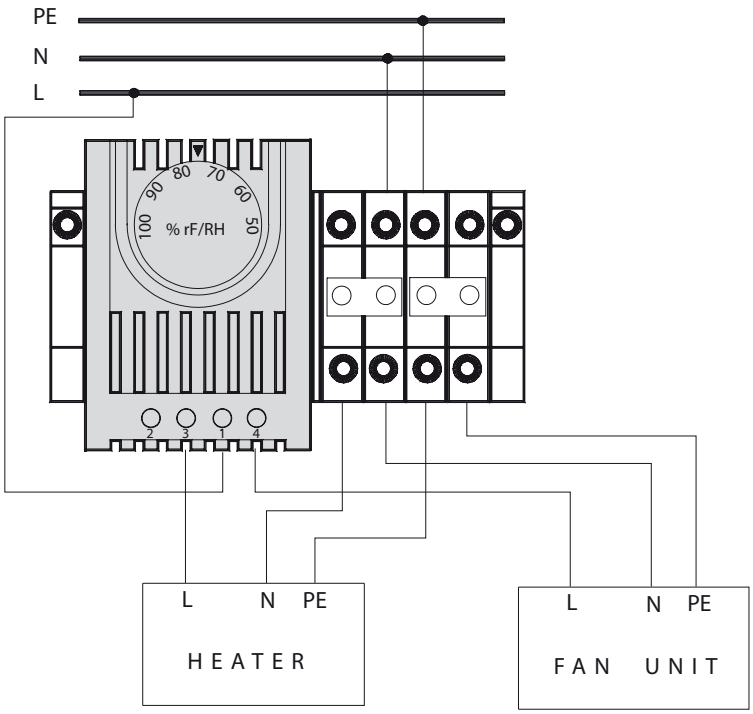

Hygrostat internal diagram

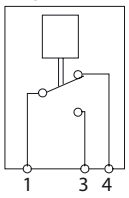

Thermostat

Thermostats are used for controlling fan units, heaters and heat exchangers; they can also be used as signal generators for monitoring the internal temperature of the enclosure.

KTS 1141 - thermostat normally open
Switches on ventilation system (e. g. fans) at selected temperature limit.

TECHNICAL DATA

- Sensor element:
  thermal bimetal
- Temperature range:
  0-60°C, hysteresis ca. 7 °C
- Contact types:
  snap action contact
- Power carrying capacity:
  6 A (1) 250 V AC
- Radio frequency interference:
  N (according to VDE 0875)

Type of thermostat	Colour of handwheel	Package	Numer katalogowy
KTO 1140 - normally closed	●	1 pc.	WN-0201-01-00-000/A
KTS 1141 - normally open	●	1 pc.	WN-0201-02-00-000/A

CONNECTION DIAGRAM

Integral diagram of KTO 1140 thermostat (normally closed)

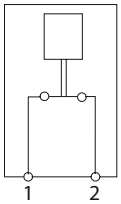

KTO 1140 switches off devices (e. g. heaters) at selected temperature limit

Integral diagram of KTS 1141 thermostat (normally open)

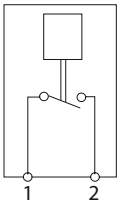

KTS 1141 switches on ventilation system (e. g. fans) at selected temperature limit.

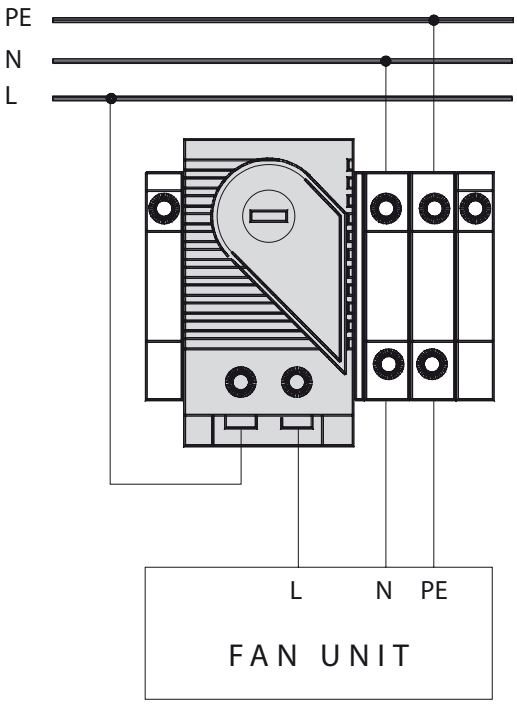

AIR-CONDITIONING SYSTEMS

In Data Center facilities the right temperature, humidity and quality of air delivered by precision cooling devices are the most important factors ensuring operational continuity of computational units. Precision air conditioning is essential for providing proper microclimate 24 hours a day throughout the year.

ZPAS precision air conditioning portfolio can be divided according to air flow concepts and cooling agent. Our offer encompasses both air conditioners for single cabinets, as well as precision air-conditioning cabinets for server rooms.

Separate air-conditioning units

Separate air-conditioning units make up a group of air-conditioning equipment designed for RACK type cabinets. Separate air-conditioning units make additional devices delivering air into the cabinet unnecessary.

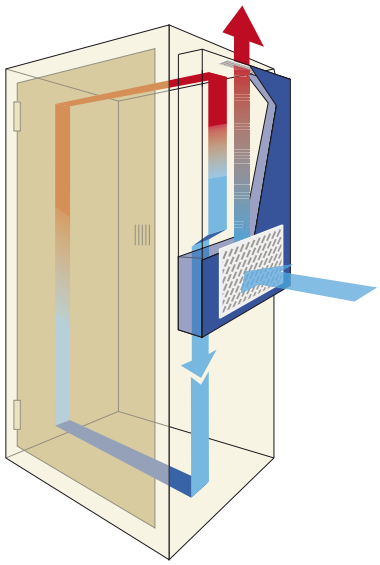

PROTHEM
Air-conditioning unit mounted on the cabinet's side panel Cooling capacity ranging from 330 to 4000 W

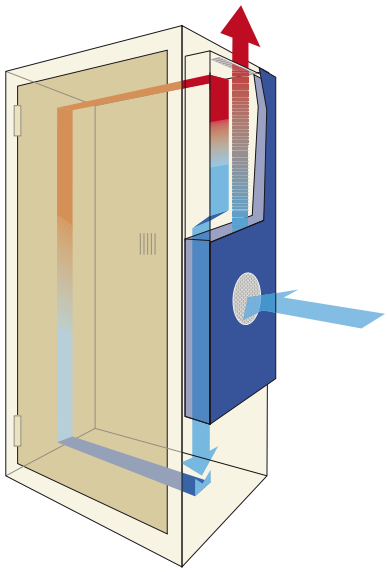

SLIM
Air-conditioning unit mounted on the cabinet's door or side panel
Cooling capacity: from 500 to 3000 W

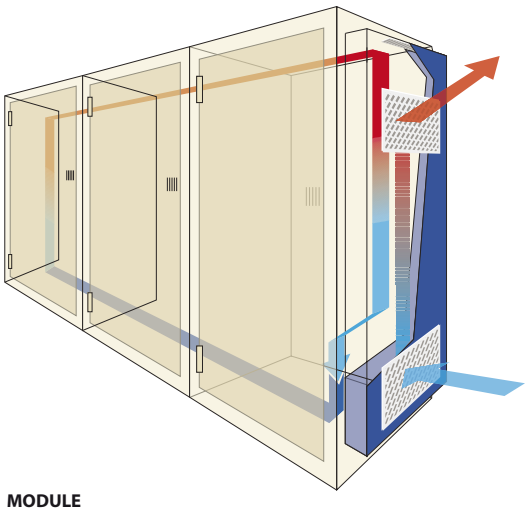

MODULE
Air-conditioning unit intended for cooling more than one cabinet.
Mounted on the side of a system of combined cabinets.
Cooling capacity ranging from 5800 to 10000 W

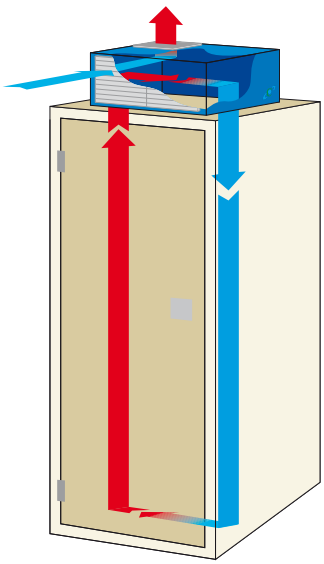

TOP
Rooftop air-conditioning unit
Cooling capacity ranging from 330 to 5200 W

AIR-CONDITIONING SYSTEMS

Precision air-conditioning cabinets

Precision air-conditioning cabinet is a proven traditional approach to server room cooling. We offer systems based on R410A coolant and chilled water. Every precision air-conditioning cabinet comes with:
- EC / AC fans (up to 20 kW),
- condenser (if R410A coolant selected),
- steam humidifier,
- heater,
- PLC,
- user panel.

With the extensive range and individual approach, we select precision air-conditioning cabinets to match your specific needs.

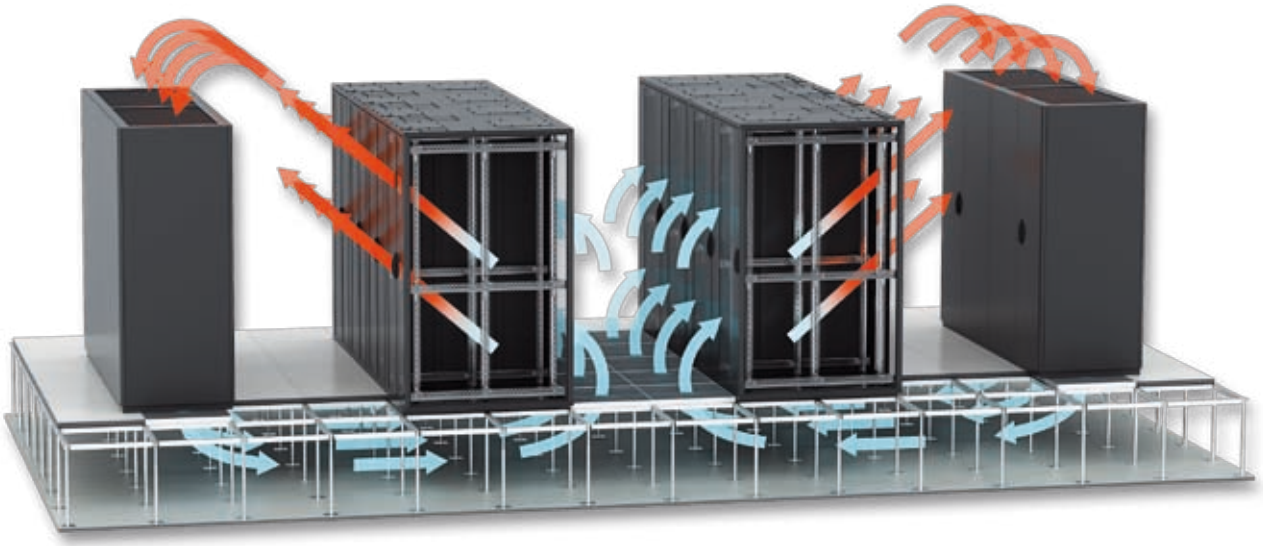

AIR-CONDITIONING SYSTEMS

Closed circuit
- cooling with side heat exchanger
- more information on page 174

Open circuit
- cooling with row heat exchangers
- more information on page 168

Side and row heat exchangers

Nowadays, data centres are usually cooled by means of cool air inlets running under the access floor or through direct blow of cold air into the room, which can lead to mixing of cold and hot air, thus, compromising the air conditioning efficiency. Uneven distribution of equipment in terms of generated heat can also create hot spots. By using row or side heat exchangers, you can avoid these problems and provide an optimal environment for electronic equipment.

KEY FEATURES AND FUNCTIONAL PROPERTIES:

- Easy mounting without any interference inside the cabinet.
- Constant, even flow of air.
- Shortening the path that cold air travels to active devices.
- Direct removal of hot air from active devices.
- Exchanger redundancy N+1 easily achieved.
- Cooling agent supply from the top or from the bottom of the heat exchanger.
- Heat exchangers suitable for 42, 45 and 47 U cabinets as well as for cabinets of 1000 mm and 1200 mm in depth.
- Possibility to replace filters "on the fly".
- Allows for collecting condensate and removing it outside mechanically using a condensate extraction pump.
- Inputs for hydraulic connections making it possible to connect at the top or at the bottom of the heat exchanger.
- Temperature and humidity measurement.
- Advanced controller that controls various modes of exchanger operation.
- Communication via Ethernet.

REFERENCE CHART:

Exchanger	Cooling capacity [kW]	Catalogue number		Coolant	Additional options
		RAL 9005	RAL 7035		
Row heat exchangers					
RWC-CW1	12.3	WZ-6248-01-01-161	WZ-6248-01-01-011	CW	3xEC, MKEthernet, PSCW**, HTOP
RWC-CW2	16.0	WZ-6248-01-02-161	WZ-6248-01-02-011	CW	5xEC, MKEthernet, PSCW**, HTOP
RWC-CW3	19.5	WZ-6248-01-03-161	WZ-6248-01-03-011	CW	5xEC, MKEthernet, PSCW**, HTOP
RWC-DX1	4.5 – 8*	WZ-6249-01-02-161	WZ-6249-01-02-011	DX	3xEC, MKEthernet, SDX1, SDX2
RWC-DX2	11.2 –14 – 22.5*	WZ-6249-01-04-161	WZ-6249-01-04-011	DX	5xEC, MKEthernet, SDX3, SDX4, SDX5
Side heat exchangers					
BWC-CW1	22.6	WZ-6248-01-04-161	WZ-6248-01-04-011	CW	3xEC, MKEthernet, PSCW**, HTOP
BWC-CW2	31.0	WZ-6248-01-05-161	WZ-6248-01-05-011	CW	5xEC, MKEthernet, PSCW**, HTOP
BWC-CW3	37.7	WZ-6248-01-06-161	WZ-6248-01-06-011	CW	5xEC, MKEthernet, PSCW**, HTOP
BWC-DX1	4.5 – 8*	WZ-6249-01-01-161	WZ-6249-01-01-011	DX	3xEC, MKEthernet, SDX1, SDX2
BWC-DX2	11.2 –14 – 22.5*	WZ-6249-01-03-161	WZ-6249-01-03-011	DX	5xEC, MKEthernet, SDX3, SDX4, SDX5

External condensers for RWC-DX and BWC-DX units	Cooling capacity [kW]	Suitable for	Catalogue number
SDX1	4.5	RWC-DX1, BWC-DX1	M1S-00-0100
SDX2	8.0	RWC-DX1, BWC-DX1	M1S-00-0101
SDX3	11.2	RWC-DX2, BWC-DX2	M1S-00-0102
SDX4	14.0	RWC-DX2, BWC-DX2	M1S-00-0103
SDX5	22.5	RWC-DX2, BWC-DX2	M1S-00-0104

Additional options	Description	Catalogue number
3xEC	3x EC fans	M1S-01-0132
5xEC	5x EC fans	M1S-01-0133
MKEthernet	Ethernet communication module	M1U-08-0272
PSCW	Condensate extraction pump	M1S-00-0098
HTOP	Changing the hydraulic circuits connection at the top of the heat exchanger for RWC-CW and BWC-CW units	M1S-00-0099

* NOTE: for RWC-DX and RWC-DX units cooling capacity depends on external condenser selected.
** NOTE: if you add the condensate extraction pump to RWC-CW and BWC-CW units, the hydraulic circuits connection at the top of the heat exchanger (HTOP) should be changed.

AIR-CONDITIONING SYSTEMS

Water chiller units

ZPAS Group offers a broad choice of water chiller units. Depending on the required cooling capacity, we offer units ranging from 5 to 200 kW. Water chiller units can be equipped with free-cooling, which enables the use of cold atmospheric air for cooling server rooms, thus reducing air conditioning costs. Depending on your needs, the units are designed for external or internal installation.

Due to the wide range of available solutions and various configuration options, we lend each project client-specific approach.

Sample server room air-conditioning system using side heat exchangers

The cooling agent is supplied from an appropriate chiller unit whose power output, redundancy potential and installation method need adjustment to specific working conditions. Our product range includes chiller units with different power rating, both for outside and inside applications.
For systems that make use of a chiller unit existing in the building and in order to provide cooling water circulation, as well as water temperature adjustment, we deliver complete cooling water distribution units. They are made up of circulation pumps, a heat exchanger and a control unit. Distribution units prevent water condensation in the heat exchanger and guarantee stable operations in heat abstraction.

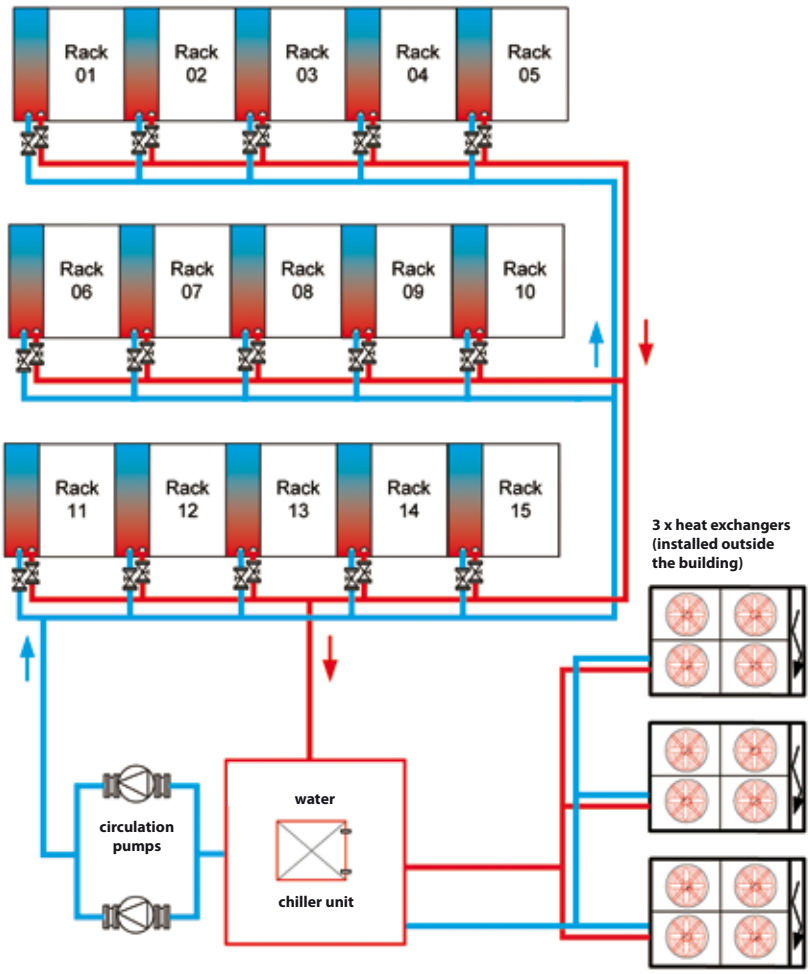

CONSOLES AND KVM SWITCHES

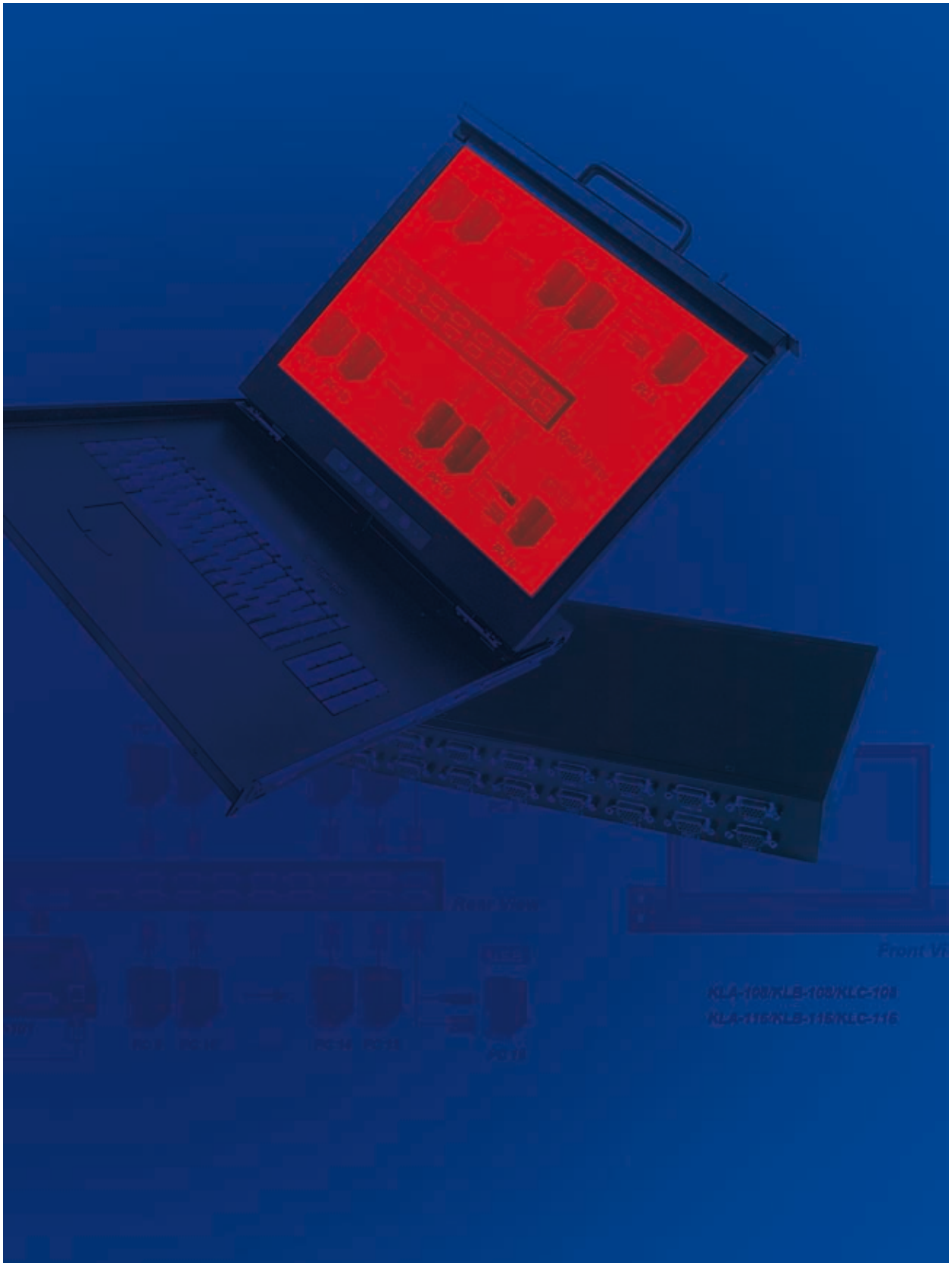

CONSOLES AND KVM SWITCHES

CONSOLES

KVM consoles are devices designed for network administrators managing multiple servers. The consoles are equipped with 17" or 19" LCD displays with an TFT Active Matrix, ultraslim keyboard and touchpad. A single console occupies a height of 1 U in a 19" rack-type cabinet. The consoles secure the highest quality of image, and are compatible with dedicated KVM MER, VEN and MAR switches.

Console	CORN 17	CORN 19	GEM 17	GEM 19
Catalogue number	T-SO-970-102	T-SO-970-103	T-SO-970-002	T-SO-970-003
Usage	1 PC to 1 console	1 PC do 1 console	1 PC to 1 console	1 PC to 1 console
Matrix	Active TFT LCD, 17"	Active TFT LCD, 19"	Active TFT LCD, 17"	Active TFT LCD, 19"
Rail	Single	Single	Dual	Dual
Resolution capabilities	1280 x 1024	1280 x 1024	1280 x 1024	1280 x 1024
Pixel pitch	0.264 x 0.264 mm	0.298 x 0.294 mm	0.264 x 0.264 mm	0.298 x 0.294 mm
Viewing angle	70° right-left view 60° up-down view	140° right-left view 140° up-down view	70° right-left view 60° up-down view	140° right-left view 140° up-down view
Contrast ratio	450 ÷ 1	500 ÷ 1	450 ÷ 1	500 ÷ 1
Brightness	250 cd/m^2	250 cd/m^2	250 cd/m^2	250 cd/m^2
Back light	4 lamps	4 lamps	4 lamps	4 lamps
Supported colors	16.7 milion colors	16.7 milion colors	16.7 milion colors	16.7 milion colors
Response time	2 ms (rising time) 14 ms (decay time)	2 ms (rising time) 10 ms (decay time)	2 ms (rising time) 14 ms (decay time)	2 ms (rising time) 10 ms (decay time)
Slots number	1	1	1	1
Ports number PC	1	1	1	1
Synchronization	45 ÷ 80 kHz	45 ÷ 80 kHz	45 ÷ 80 kHz	45 ÷ 80 kHz
Keyboard	106 buttons, PS/2, touchpad	106 buttons, PS/2, touchpad	106 buttons, PS/2, touchpad	106 buttons, PS/2, touchpad
Power consumption	25 W	25 W	25 W	25 W
Power supply	~230 V AC	~230 V AC	~230 V AC	~230 V AC
Temperature	0 °C ÷ 50 °C	0 °C ÷ 50 °C	0 °C ÷ 50 °C	0 °C ÷ 50 °C
Humidity	10 % ÷ 90 %, non-condensing	10 % ÷ 90 %, non-condensing	10 % ÷ 90 %, non-condensing	10 % ÷ 90 %, non-condensing
Certification	CE, FCC, UL, CUL, C-Tick, GOST	CE, FCC, UL, CUL, C-Tick, GOST	CE, FCC, UL, CUL, C-Tick, GOST	CE, FCC, UL, CUL, C-Tick, GOST

CONSOLES WITH KVM SWITCHES

FUNCTIONALITY

- Local and remote console
- Cat. 5 console with a maximum range of 300 m with automatic image setting function
- USB and PS/2 interfaces
- Support for Windows / Linux / DOS / Netware / Unix / Mac OS
- Possibility of connecting a PC without necessity of turning off console or PC
- High resolution - up to 1600 x 1200 px
- Managing computers using the OSD / keyboard shortcuts / buttons
- No software installation required
- Daisy Chain function stacking connections
- Auto Scan Mode for monitoring PC
- Upgradeable firmware
- Durable steel construction

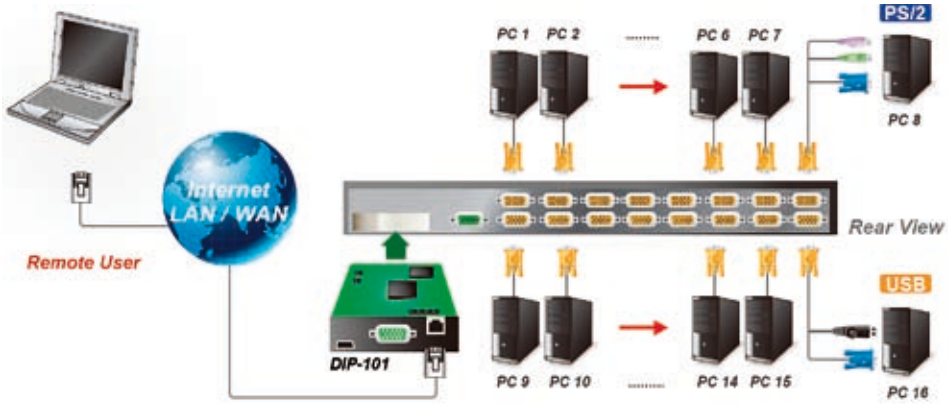

Model	KLB-108	KLC-108	KLB-116	KLC-116
Catalogue number	T-SO-970-700	T-SO-970-701	T-SO-970-707	T-SO-970-708
Matrix	17"	19"	17"	19"
Weight	21.1 kg	23.1 kg	21.5 kg	23.5 kg
PC or KVM ports	8		16	
Max. number of ports	1024		2048	
PC ports	HDB15 (F)			
Remote console cat. 5	Optional cat. 5 console with RJ45 connector, max. range 300 mm, automatic image setting			
IP console	Optional IP console (Ethernet 10/100 Mbps), DB9 connector for modem and power control, mini USB 2.0 connector			
Daisy Chain	Bus up to 8 levels, DB15 (F) connector			
Choice of the active PC port	Display menu (OSD), hotkeys, button			
Keyboard shortcut	Customizable hotkeys (Scroll Lock / Caps Lock / Num Lock / Alt / CTRL / Win)			
Interval of automatic scanning ports	from 5 to 99 sec.			
Resolution	1280 x 1024 px			
Resolution (remote console)	1600 x 1200 for cat. 5 console @ 150 m; 1024 x 768 for cat. 5 console @ 300 m 1600 x 1200 for IP console			
Enclosure	metall, 1U 19"			
Dimensions	600 x 450 x 44 mm			

KVM SWITCHES

Designed for connecting KVM console with workstations (servers).
KVM MER, VEN and MAR switches are dedicated to CORN and GEM consoles.

Switch	MER 8D	MER 16D	VEN 8D
Catalogue number	T-SO-970-201	T-SO-970-202	T-SO-970-203
Usage	8 PC to 1 user / stackable, for mounting in CORN/GEM consoles	16 PC to 1 user / stackable, for mounting in CORN/GEM consoles	8 PC to 2 users (1+1) / stackable, for mounting in CORN/GEM consoles
PC ports	8x HDB15(F)	16x HDB15(F)	8x HDB15(F)
Max. distance (KVM switch - Host)	5 m (depending on terminal type)	5 m (depending on terminal type)	5 m (depending on terminal type)
Required cabling	dedicated integrated connections	dedicated integrated connections	dedicated integrated connections
Types of supported PC ports (keyboard/mouse)	PS/2	PS/2	PS/2 or USB
Console ports	–	–	1 (one local) 1 IP-based remote console
Available modules of the remote console	–	–	Cat. 5 or IP
Port Daisy Chain	1x HDB15(F)	1x HDB15(F)	1x HDB15(F)
Max. PC connections	64	128	64
Max. switch connections	8 (serial)	8 (serial)	8 (serial)
Choice of the active PC port	keyboard shortcut / OSD	keyboard shortcut / OSD	keyboard shortcut / OSD
Display menu OSD	Yes	Yes	Yes
Interval of automatic scanning ports	from 5 to 99 sec.	from 5 to 99 sec.	from 5 to 99 sec.
Max. resolution (Local console)	1920 x 1440	1920 x 1440	1920 x 1440
Max. resolution (Remote console)	–	–	1600 x 1200 for cat. 5 module 150 m, 1024 x 768 for cat. 5 module 300 m, 1600 x 1200 for IP module
Cover	metal	metal	metal
Power supply	DC power adapter 12 V DC 1 A, ~230 V AC 50 Hz	DC power adapter 12 V DC 1 A, ~230 V AC 50 Hz	DC power adapter 12 V DC 1 A, ~230 V AC 50 Hz
Dimensions	420 x 170 x 41.4 mm	420 x 170 x 41.4 mm	420 x 170 x 41.4 mm

KVM SWITCHES

VEN 16D	**MAR 8D**	**MAR 16D**	**MAR 32D**
T-SO-970-204	T-SO-970-205	T-SO-970-206	T-SO-970-207
16 PC to 2 users (1+1) / stackable, for mounting in CORN/GEM consoles	8 PC to 2 users (1+1) / stackable, for mounting in CORN/GEM consoles	16 PC to 2 users (1+1) / stackable, for mounting in CORN/GEM consoles	32 PC to 2 users (1+1) / stackable, for mounting in CORN/GEM consoles
16x HDB15(F)	8x 8p8c(F) RJ-45	16x 8p8c(F) RJ-45	32x 8p8c(F) RJ-45
5 m (depending on terminal type)	150 m with the DCC-001	150 m with the DCC-001	150 m with the DCC-001
dedicated integrated connections	twisted pair cable, category 5e, 6 or higher	twisted pair cable, category 5e, 6 or higher	twisted pair cable, category 5e, 6 or higher
PS/2 or USB	PS/2 or USB	PS/2 or USB	PS/2 or USB
1 (one local) 1 IP-based remote console	1 (one local) 1 IP-based remote console	1 (one local) 1 IP-based remote console	1 (one local) 1 IP-based remote console
Cat. 5 or IP	Cat. 5 or IP	Cat. 5 or IP	Cat. 5 or IP
1x HDB15(F)	1x HDB15(F)	1x HDB15(F)	1x HDB15(F)
128	64	128	256
8 (serial)	8 (serial)	8 (serial)	8 (serial)
keyboard shortcut / OSD	keyboard shortcut / OSD	keyboard shortcut / OSD	keyboard shortcut / OSD
Yes	Yes	Yes	Yes
from 5 to 99 sec.	from 5 to 99 sec.	from 5 to 99 sec.	from 5 to 99 sec.
1920 x 1440	1600 x 1200	1600 x 1200	1600 x 1200
1600 x 1200 for cat. 5 module 150 m, 1024 x 768 for cat. 5 module 300 m, 1600 x 1200 for IP module	1600 x 1200 for cat. 5 module 150 m, 1024 x 768 for cat. 5 module 300 m, 1600 x 1200 for IP module	1600 x 1200 for cat. 5 module 150 m, 1024 x 768 for cat. 5 module 300 m, 1600x1200 for IP module	1600 x 1200 for cat. 5 module 150 m, 1024 x 768 for cat. 5 module 300 m, 1600 x 1200 for IP module
metal	metal	metal	metal
DC power adapter 12 V DC 1 A, ~230 V AC 50 Hz	DC power adapter 12 V DC 1 A, ~230 V AC 50 Hz	DC power adapter 12 V DC 1 A, ~230 V AC 50 Hz	DC power adapter 12 V DC 1 A, ~230 V AC 50 Hz
420 x 170 x 41.4 mm	420 x 170 x 41.4 mm	420 x 170 x 41.4 mm	420 x 170 x 41.4 mm

KVM SWITCHES

Switch	KSC-108A	KSC-108B	KSC-108E	KCC-108A
Numer katalogowy	T-SO-970-600	T-SO-970-602	T-SO-970-604	T-SO-970-606
Usage	8 PC to 1 user / stackable	8 PC to 2 users (1+1) / stackable	8 PC to 2 users (1+1) / stackable	8 PC to 2 users (1+1) / stackable
PC ports	8x HDB15(F)	8x HDB15(F)	8x HDB15(F)	8x 8p8c(F) RJ-45
Max. distance (KVM switch - Host)	5 m (depending on terminal type)	5 m (depending on terminal type)	5 m (depending on terminal type)	150 m with Oxca DCC-001
Required cabling	dedicated integrated connections	dedicated integrated connections	dedicated integrated connections	twisted pair cable, category 5e, 6 or higher
Types of supported PC ports (keyboard/mouse)	PS/2 or USB	PS/2 or USB	PS/2 or USB	PS/2 or USB
Console ports	1x VGA HDB15(F) + 2x PS/2 mini DIN 6(F), 1 widening port for the module of remote console	1x VGA HDB15(F) + 2x PS/2 mini DIN 6(F), 1 widening port for the module of remote console	1x VGA HDB15(F) + 2x USB A(F), 1 widening port for the module of remote console	1x VGA HDB15(F) + 2x USB A(F), 1 widening port for the module of remote console
Available modules of the remote console	–	Cat. 5 or IP	Cat. 5 or IP	Cat. 5 or IP
Port Daisy Chain	1x HDB15(F)	1x HDB15(F)	1x HDB15(F)	1x HDB15(F)
Max. PC connections	64	64	64	64
Max. switch connections	8 (serial)	8 (serial)	8 (serial)	8 (serial)
Choice of the active PC port	keyboard shortcut / OSD / button	keyboard shortcut / OSD / button	keyboard shortcut / OSD / button	keyboard shortcut / OSD / button
Display of the switch number	7-sectional LED	7-sectional LED	7-sectional LED	7-sectional LED
Numbers of LED diodes of the state	16 (2 for each PC port)	16 (2 for each PC port)	16 (2 for each PC port)	16 (2 for each PC port)
Display menu OSD	Yes	Yes	Yes	Yes
Interval of automatic scanning ports	from 5 to 99 sec.	from 5 to 99 sec.	from 5 to 99 sec.	from 5 to 99 sec.
Max. resolution (Local console)	1920 x 1440	1920 x 1440	1920 x 1440	1600 x 1200
Max. resolution (Remote console)	–	1600 x 1200 for cat. 5 module 150 m, 1024 x 768 for cat. 5 module 300 m, 1600 x 1200 for IP module	1600 x 1200 for cat. 5 module 150 m, 1024 x 768 for cat. 5 module 300 m, 1600 x 1200 for IP module	1600 x 1200 for cat. 5 module 150 m, 1024 x 768 for module cat. 5 module 300 m, 1600 x 1200 for IP module
Cover	19", metal	19", metal	19", metal	19", metal
Power supply	DC power adapter 12 V DC 1 A, ~230 V AC 50 Hz	DC power adapter 12 V DC 1 A, ~230 V AC 50 Hz	DC power adapter 12 V DC 1 A, ~230 V AC 50 Hz	DC power adapter 12 V DC 1 A, ~230 V AC 50 Hz
Dimensions	470 x 190 x 44 mm	470 x 190 x 44 mm	470 x 190 x 44 mm	470 x 190 x 44 mm

KVM SWITCHES

KSC-116A	**KSC-116E**	**KCC-116A**	**KSC-116B**	**KCC-132A**
T-SO-970-601	T-SO-970-605	T-SO-970-607	T-SO-970-603	T-SO-970-608
16 PC to 1 user / stackable	16 PC to 2 users (1+1) / stackable	16 PC to 2 users (1+1) / stackable	16 PC to 2 users (1+1) / stackable	16 PC to 2 users (1+1) / stackable
16x HDB15(F)	16x HDB15(F)	16x 8p8c(F) RJ-45	16x HDB15(F)	32x 8p8c(F) RJ-45
5 m (depending on terminal type)	5 m (depending on terminal type)	150 m with Oxca DCC-001	5 m (depending on terminal type)	150 m with Oxca DCC-001
dedicated integrated connections	dedicated integrated connections	twisted pair cable, category 5e, 6 or higher	dedicated integrated connections	twisted pair cable, category 5e, 6 or higher
PS/2 or USB	PS/2 or USB	PS/2 or USB	PS/2 or USB	PS/2 or USB
1x VGA HDB15(F) + 2x PS/2 mini DIN 6(F), 1 widening port for the module of remote console	1x VGA HDB15(F) + 2x USB A(F), 1 widening port for the module of remote console	1x VGA HDB15(F) + 2x USB A(F), 1 widening port for the module of remote console	1x VGA HDB15(F) + 2x PS/2 mini DIN 6(F), 1 widening port for the module of remote console	1x VGA HDB15(F) + 2x USB A(F), 1 widening port for the module of remote console
-	Cat. 5 or IP	Cat. 5 or IP	Cat. 5 or IP	Cat. 5 or IP
1x HDB15(F)	1x HDB15(F)	1x HDB15(F)	1x HDB15(F)	1x HDB15(F)
128	128	128	128	256
8 (serial)	8 (serial)	8 (serial)	8 (serial)	8 (serial)
keyboard shortcut / OSD / button	keyboard shortcut / OSD / button	keyboard shortcut / OSD / button	keyboard shortcut / OSD / button	keyboard shortcut / OSD / button
7-sectional LED	7-sectional LED	7-sectional LED	7-sectional LED	7-sectional LED
32 (2 for each PC port)	32 (2 for each PC port)	32 (2 for each PC port)	32 (2 for each PC port)	64 (2 for each PC port)
Yes	Yes	Yes	Yes	Yes
from 5 to 99 sec.	from 5 to 99 sec.	from 5 to 99 sec.	from 5 to 99 sec.	from 5 to 99 sec.
1920 x 1440	1920 x 1440	1600 x 1200	1920 x 1440	1600 x 1200
–	1600 x 1200 for cat. 5 module 150 m, 1024 x 768 for cat. 5 module 300 m, 1600 x 1200 for IP module	1600 x 1200 for cat. 5 module 150 m, 1024 x 768 for cat. 5 module 300 m, 1600 x 1200 for IP module	1600 x 1200 for cat. 5 module 150 m, 1024 x 768 for cat. 5 module 300 m, 1600 x 1200 for IP module	1600 x 1200 for cat. 5 module 150 m, 1024 x 768 for cat. 5 module 300 m, 1600 x 1200 for IP module
19", metal	19", metal	19", metal	19", metal	19", metal
DC power adapter 12 V DC 1 A, ~230 V AC 50 Hz	DC power adapter 12 V DC 1 A, ~230 V AC 50 Hz	DC power adapter 12 V DC 1 A, ~230 V AC 50 Hz	DC power adapter 12 V DC 1 A, ~230 V AC 50 Hz	DC power adapter 12 V DC 1 A, ~230 V AC 50 Hz
470 x 190 x 44 mm	470 x 190 x 44 mm	470 x 190 x 44 mm	470 x 190 x 44 mm	470 x 190 x 44 mm

SUPPLEMENTARY ACCESSORIES FOR CONSOLES AND KVM SWITCHES

19" keyboard KBD-106TP-USB

19" keyboard KBD-106TP-USB

Catalogue number: T-SO-970-400; T-SO-970-401
Interface: PS/2 (T-SO-970-400) or USB (T-SO-970-401)
Dimensions: 437.4 x 436.6 x 44 mm
Weight: 6.0 kg
Power supply: from keyboard port

Cable HD-MD

Cable HD-MD

PC ports: 1x HD-15M, 2x MD-6M
Console ports: 1x HD-15M

Cable type	Length	Catalogue number
KC-1501	1.8 m	T-SO-970-301
KC-1503	3.0 m	T-SO-970-303
KC-1505	5.0 m	T-SO-970-305

Cable HD-USB

Cable HD-USB

PC ports: 1x HD-15M, 1x USB type A (M)
Console ports: 1x HD-15M

Cable type	Length	Catalogue number
KC-1501-USB	1.8 m	T-SO-970-311
KC-1503-USB	3.0 m	T-SO-970-313
KC-1505-USB	5.0 m	T-SO-970-315

Adapter for KVM cat. 5

Adapter for KVM cat. 5, DCC-001

Catalogue Number: T-SO-970-620
Application: Adapter RJ-45 to PS/2+VGA for KVM cat. 5
PC port: 1x VGA HDB15(F) + 2x PS/2 mini DIN 6(F)
Types of supported PC ports (keyboard/mouse):
PS/2 or USB (from CUP-101)
KVM port: 1x 8p8c(F) RJ-45
Numbers of LED diodes of the state: 1
Dimensions: 90 x 30 x 20 mm
Power supply:
from PS/2 ports, the external power supply is not necessary

SUPPLEMENTARY ACCESSORIES FOR CONSOLES AND KVM SWITCHES

Console module KVM 1+1 with cat. 5 port, type DCC -150

Catalogue number: T-SO-970-622
Application:
remote access to KVM 1+1 through the twisted-pair cable
Contain: local module, remote module
Max range: 150 m
Demand wire: twisted-pair cable cat. 5e, 6 or higher
Access control: on the level of remote console module

LOCAL MODULE:
Application: for the cat. 5 remote module connection
Port cat. 5: 1x 8p8c(F) RJ-45
Dimensions: 108 x 72 x 20 mm

REMOTE MODULE:
Application: for the remote console connection to KVM 1+1, integrated KVM 2 PC for 1 user
PC port: 1x HDB15(F)
KVM port 1+1: 1x 8p8c(F) RJ-45
Types of supported PC ports (keyboard/mouse): PS/2 or USB
Console ports: 1x VGA HDB15(F) + 2x USB A(F)
Choice of the active PC/Cat.5 port:
keyboard shortcut / OSD / button
Number of LED diodes of the state: 2
Max. resolution: 1280 x 1024
Cover: desktop, metal
Dimensions: 160 x 70 x 25 mm
Power supply: 9 V DC 500 mA, ~230 V AC 50 Hz

Console module KVM 1+1 with cat. 5

Console module KVM 1+1 with IP port, type DIP-101

Catalogue number: T-SO-970-330
Application: remote access to KVM 1+1 through the IP network
Max. resolution: local 1600x1200, remote 1280x1024
IP port: 1x 10/100 Mbps RJ-45, access HTTP/HTTPS and telnet
Terminal port: 1x DB9, access to the basic configuration locally or through a modem
Line port: 1x miniUSB B(F) 2.0, remote access to the mass storage
Service of protocols: DHCP, static IP (support for DDNS), Bootp
Data encryption: SSL 256-bit
Access control: login + password, user profiles, user groups
Compatibility: IE6.0, Mozilla 1.6, Netscape 7.0, Opera 8.0
Access trough the HTTP: required installation Java RE 1.4.2
Simultaneous access of multiple users:
recommended number: not more than 15 users
Number of users accounts:
recommended number: not more than 150 accounts
Log on of events: NFS, SMTP, SNMP Trap
Dimensions: 108 x 72 x 20 mm
Software update: Yes

Console module KVM 1+1 with IP port

MONITORING AND ACCESS CONTROL SYSTEMS

MONITORING AND ACCESS CONTROL SYSTEMS

MONITORING AND ACCESS CONTROL SYSTEMS

OVERSEE

MONITORING SYSTEM FOR EQUIPMENT OPERATION CONDITIONS

The basic element of the monitoring system is ST-50 the controller. It allows you to read measurements from the 1-Wire sensors (Dallas Semiconductor technology), and access them via Ethernet. It analyses entered alarm conditions and can react by turning digital binary outputs on and off, depending on the measurement threshold. It can also send e-mails. It is able to independently connect to a data collection centre in order to report an emergency. The construction of this unit allows you to build autonomous monitoring systems, independently of the monitoring centre. It also allows for load reduction by reducing it to just "listening out" for alarms reported by the controller. The ST-50 controller works with the following measuring sensors: temperature T1, temperature and humidity THP110, with ILO880 input module and ILO004 output module.

ST 50 CONTROLLER

Parameters:
- Power supply: 12 V ~ 200 mA
- Communication interfaces:
  1x Ethernet – RJ45 port with status indication (2x LED)
  2x 1-Wire – RJ45 port
  1x RS232 – 2x5 rack and panel connector
- Memory settings: EEPROM non-volatile memory
- Modular enclosure for DIN 35 mm strip

Sensors:
- Allow for connecting up to 24 1-Wire devices.
- 1-Wire type sensors (including humidity, temperature, digital binary input, voltage meters).
- Continuous reading of measurements from connected sensors.
- Length of the line including sensors: up to 100 m
- 1-Wire lines use RJ-45 port, they provide power to devices (5V/1A).

Communication:
- with measurement devices on the 1-Wire line,
- in Ethernet network (RJ45 output), with the master system using ModBus RTU protocol and UDP/IP protocol,
- with GSM modem via RS232 port to send SMS messages.

Alarms:
- You can set 24 independent alarms.
- Responses to emergency situations:
  - sending e-mails,
  - possibility to change status of the 1-Wire switch (binary output),
  - setting relay outputs in the ILO004 module.
- Defining message content of user's choice.

1-WIRE TEMPERATURE SENSOR (T1)

Parameters:
- Range of measured temperatures: from -55 °C to 125 °C
- Accuracy: 0,1 °C
- Output: 1-Wire RJ 45
- Dimensions: 42 x 58 x 26 mm

1-WIRE TEMPERATURE AND HUMIDITY SENSOR (THP110)

Parameters:
- Range of measured temperatures: from -55°C to 125°C
- Range of measured humidity: from 10% to 90%
- Accuracy: 0.1°C, 1%
- Output: 1-Wire RJ 45
- Dimensions: 60 x 65 x 27 mm

ILO 880 METER

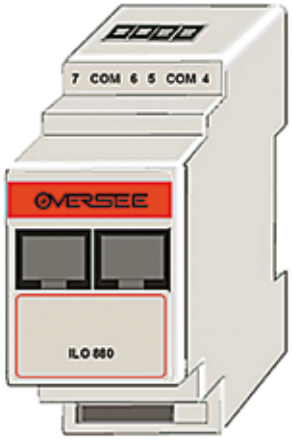

Parameters:
- 8 inputs in the form of low-voltage keys 0-10 mA
- 16 memory pages, 256 bits each
- 32-bit counters without overflow
- 2 1-Wire RJ45 ports
- Supply from the 1-Wire 5 V DC line
- Dimensions: 58 x 88 x 17 mm

ILO 004 OUTPUT MODULE

Parameters:
- Number of relay outputs: 4
- Type of relay outputs: NO/NC
- Load capacity of relay contacts: 8 A / 250 V AC
- Power supply: logic section from the 1-WIRE bus, 12 V DC / 13.2 V AC executive section from an external source
- Relay status controlled by hardware
- Relay status indication: LEDs on the enclosure, by system

OVERSEE

MONITORING SYSTEM FOR EQUIPMENT OPERATION CONDITIONS

Application scenario

We connect THP110 temperature and humidity sensor to ZPAS ST-50 controller. ILO004 output module was connected as the executive module. Planned logic provides for setting 4 alarms, two for switching outputs on, and the other two for switching outputs off. Fans and heaters with a capacity of not more than 2 kVA can be connected to outputs of the ILO004 module.

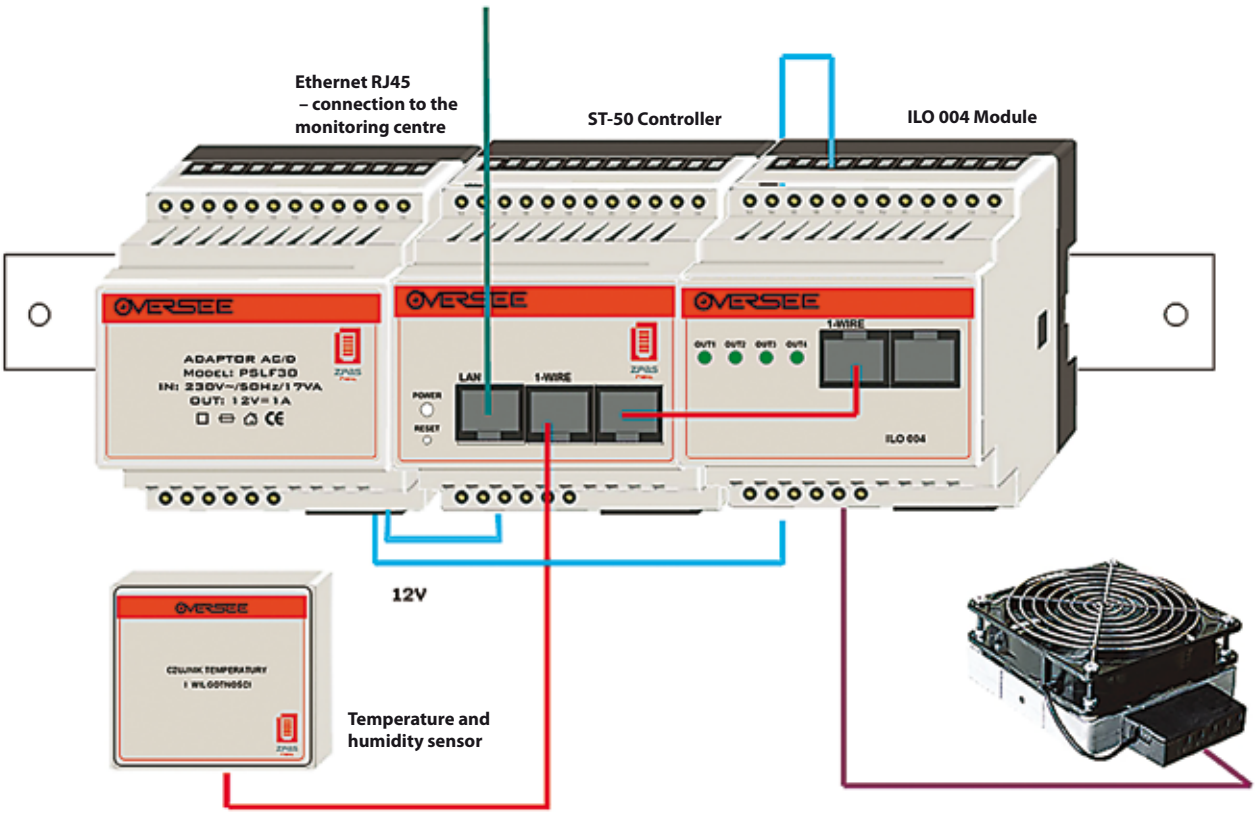

OVERSEE

MONITORING SYSTEM FOR EQUIPMENT OPERATION CONDITIONS

Software

Monitoring software allows you to collect, process and visualize data collected by the hardware layer. The user receives a comprehensive monitoring system operated via web browser. The software also allows you to build any visualization and select just the measurements you need, both current as well as archived. This allows you to adjust the settings to suit individual needs of each client connecting remotely. It also has an extensive alarm handling mechanism. The mechanism for controlling access to data collected by the monitoring system distributes user rights both in terms of users' roles in the system, as well as in terms of access to monitored facilities. Archived data can be viewed using tables and charts. All system data can be printed. An additional advantage of the system is the fact that the number of system users is not licensed. Because of its use in monitoring systems, the system is based on two main communication protocols: SNMP (communication with power stations, network devices and UPS) and ModBus RTU (communication with energy meters, power parameters analysers, data hubs). However, with the ability to add drivers, it can work with any devices that use other communication protocols. The software works very well with data hubs which can provide communication buffer between other systems, such as fire protection, climatic conditions, access control or power supply parameters.

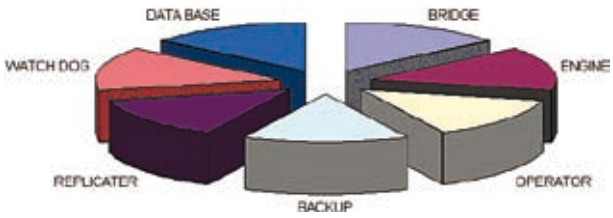

Example of server room monitoring visualization

ZPAS Access Control

ROOMS AND DATA COMMUNICATION CABINETS ACCESS CONTROL SYSTEM

The basis of the ZPAS Access Control system is the network madeup of access terminals connected to the electromechanical components (e.g. electric strikes or servos), data buffering control panels and the system operator station. What makes the ZPAS AC system different from other unauthorized access restriction systems is its construction. First of all, there are access terminals storing in their memory a database of 120 users. Secondly, each of the control network elements communicates with buffering control panels and the operator via RS485 bus. Thirdly, the system has advanced and free software that allows the administrator to easily manage even large numbers of users and protected areas. One of specific application of the system is protection of data communication cabinets. The main elements of such protection include the ESH12 electronic door lock and an access terminal. In the thinnest version, the control may cover one cabinet, protecting it with the terminal operating autonomously. Depending on the terminal version, the lock in the cabinet door opens after entering correct access code or using an authorised proximity card. If PRK12 or PRK12-BK terminals are used, the system can be expanded by connecting it to the operator's external computer station.

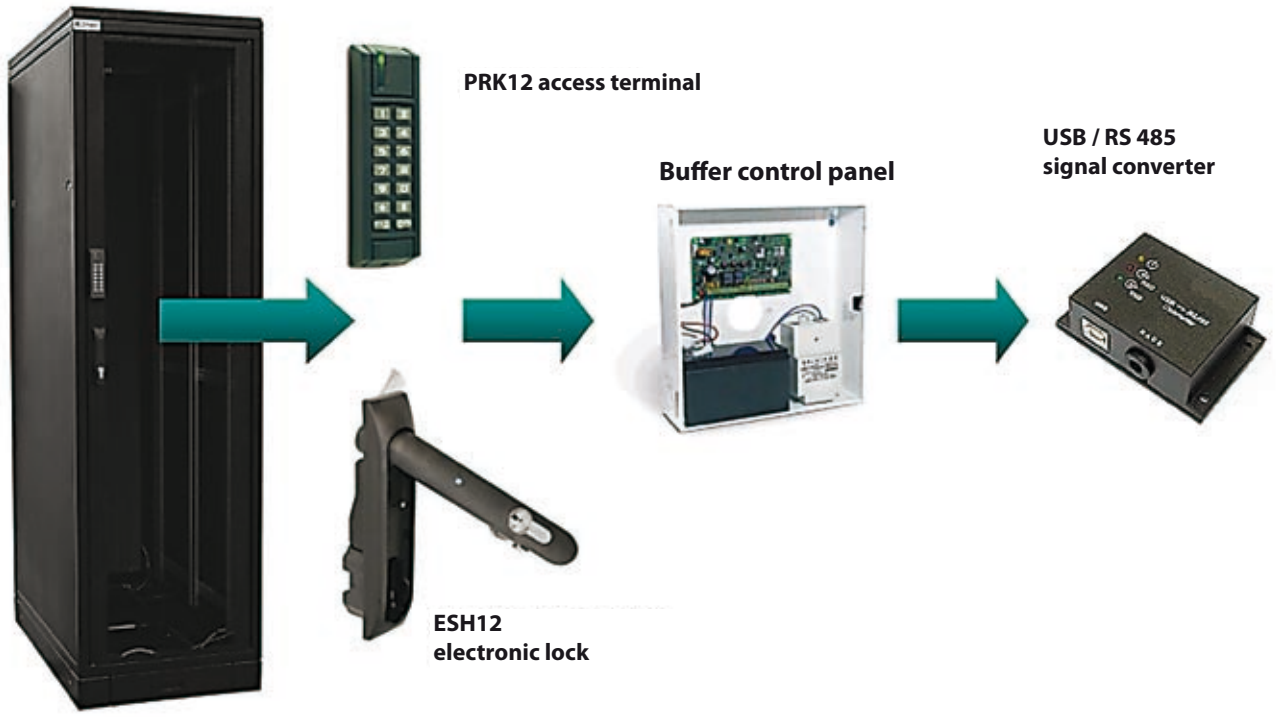

Example of configuration of the server cabinets access system with a buffer control panel and a communication interface

ZPAS Access Control

ROOMS AND DATA COMMUNICATION CABINETS ACCESS CONTROL SYSTEM

Available types of access terminals

- **PRK6** - an external digital lock with 55 user codes, provided with one relay output and two transistor outputs.
- **PRK12** - an extended external access controller equipped with a keyboard and in-built reader for cards or proximity keyrings. Additional functionalities include alarm signalling, notification of forced entry and working with the network access control system. Memory capacity for 120 users together with an access time schedule.
- **PRK12-BK** - PRK12 terminal version without keyboard for entering PIN codes.

If the PRK12 or PRK12-BK terminals operate in the network mode, their functionality is significantly extended. It is possible to divide users into access groups and assign them appropriate time schedules. You can also define special time schedules that will control user identification mode and door mode (door armed and door disarmed).

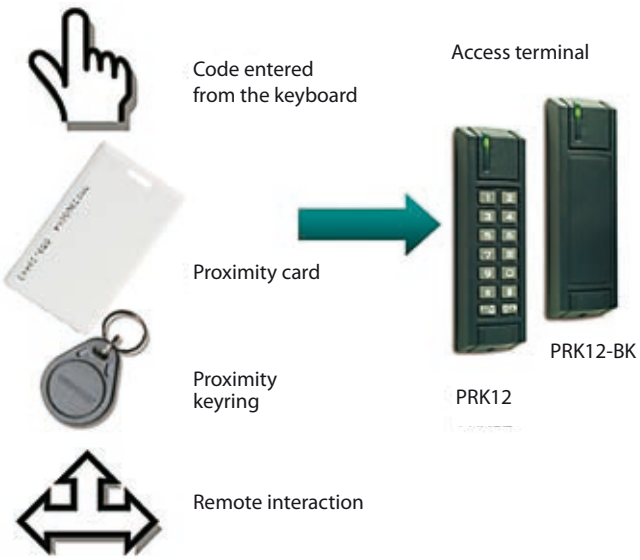

Access solutions provided by the PRK 12 access terminal

ESH12 electronic lock

Since the lock incorporates a motor mechanism (instead of electric strike), it does not generate strong magnetic field, which eliminates unnecessary danger from the inside of the cabinet. Another advantage of the solution is the fact that it is not easily amenable to wear and tear. The possibility of opening the lock with a key, e.g. in the event of a power failure, is an important feature of the device. Lock status signals are transmitted via the terminal to the operator. As a result, any such event is reported and cannot go unnoticed. Furthermore, the operator can distinguish correctly closed lock from open or even from inadequately closed lock.

COMPACT DATA CENTER

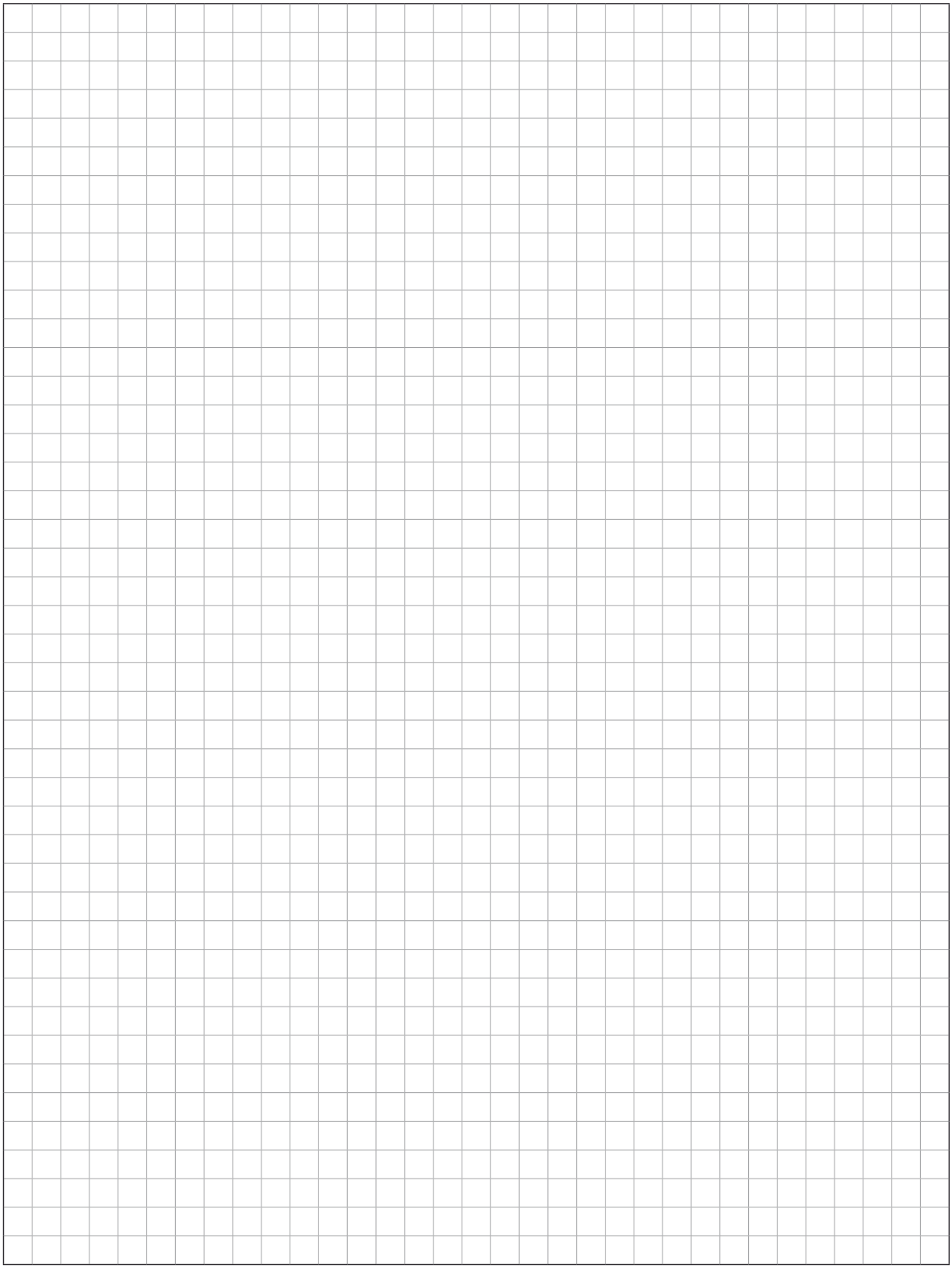

COMPACT DATA CENTER

COMPACT DATA CENTER FOR OFFICES

COMPACT DATA CENTER FOR OFFICES

SOLUTIONS FOR SMALL BUSINESS

NTT SYSTEM

We would like to introduce compact infrastructure that supplies comprehensive solution which meets increasing requirements placed on modern institutions and business customers.
Offered integrated management platform allows you to combine and automate all processes and tasks realized by the users with the latest technologies and innovative solutions. Thank to using high-quality components and carefully selected and tested configuration, it ensures high reliability of equipment and security of data.

Servers NTT Tytan Advanced

- Assure users high efficiency and quality of components - admitted and tested.
- Intended for rack mounting with usable high 1U.
- Thank to single-processor platform it's cost-effective and multifunctional solution for business needs.

Recommended server configuration:
Server NTT Tytan 1104S35 Advanced

Motherboard	single-processor, max 32 GB RAM (6 connectors)
Processor	Intel® Xeon® 3450
Graphics card	integrated
Network card	Integrated 2x10/100/1000, RAM 4 MB DDR3 ECC
RAID controller	integrated hardware controller SAS 2.0/SATA LSI 2008, RAID 0,1,10, service CLI
Hard disc	147 GB SAS 15k RPM
Drive	DVD-RW SLIM
Enclosure	1U enclosure (2x400 W), 4 x 3.5" hot-swap
Warranty	3 years warranty door-2-door

UPS battery backup
Partner GM

- Assures guaranted protection and continuous work of servers, active equipment and electronic devices, installed in compact server room.
- Keeps appropriate parameters of output voltage, protects connected devices from damaging surges and spikes.
- Offers long battery backup time during power outages.

For more information see pages 148-151

COMPACT DATA CENTER FOR OFFICES

SOLUTIONS FOR SMALL BUSINESS

For more information see page 196

MPSM-S1 Microprocessor Power Control Panel

- Programmable power panel with eight 230 V sockets, temperature and humidity sensor, as well as Ethernet interface.
- Scenarios can be programmed for enabling or disabling sockets and remote sockets management.
- Thermostat / humidity regulator features for controlling fans, heaters or humidifiers.
- Monitoring of currents, voltage, temperature and humidity.

For more information see page 76

SJB SILENT cabinet

SJB SILENT one-section cabinet with desktop is perfect solution for small network systems installed in offices.
Desktop made of furniture board gives the cabinet noble look and allows it to blend in with the existing interior decor.
Interior of the cabinet is covered with acoustic foam which reduces emission of noise with 8 dB, that effectively isolates uncomfortable noise emitted by devices installed in a cabinet.

Dimensions:

- Hight: 18 U
- Width: 600 mm
- Depth: 600 mm

Switch ES4324 / L2 Web Smart Gigabit Ethernet

- Ensures high efficiency of network with minimum configuration time.
- Thank to using Gigabit Ethernet ports, including 4 fibre optic ports SFP, it's suitable for enviroment that uses applications which require high capacity.
- Friendly internet interface allows quick and easy network configuration.

Main features:

- ports 20 x 1000Base-T + 4 x Gigabit Combo (RJ-45/SFP)
- handling standard Rapid Spanning Tree (RSTP)
- Smart Quality of Service function (layer 2/4)
- Smart Security function
- non-blocking switching
- transmission speed 35.7 Mp/s
- switching efficiency 48 Gb/s
- easy management via interface WWW
- function save-energy up to 53.6 %

The benefits of using ZPAS compact server room:

- central gathering place of all processes and tasks realized in the office,
- comprehensive infrastructure with possibility of adapting to individual needs,
- data security ensured by continous monitoring,
- safe access to information, even during a momentary power outage,
- increased comfort and work efficiency of its users, compact infrastructure is cost-effective for its owner.

NOTES

NOTES

COPPER CABLING COMPONENTS

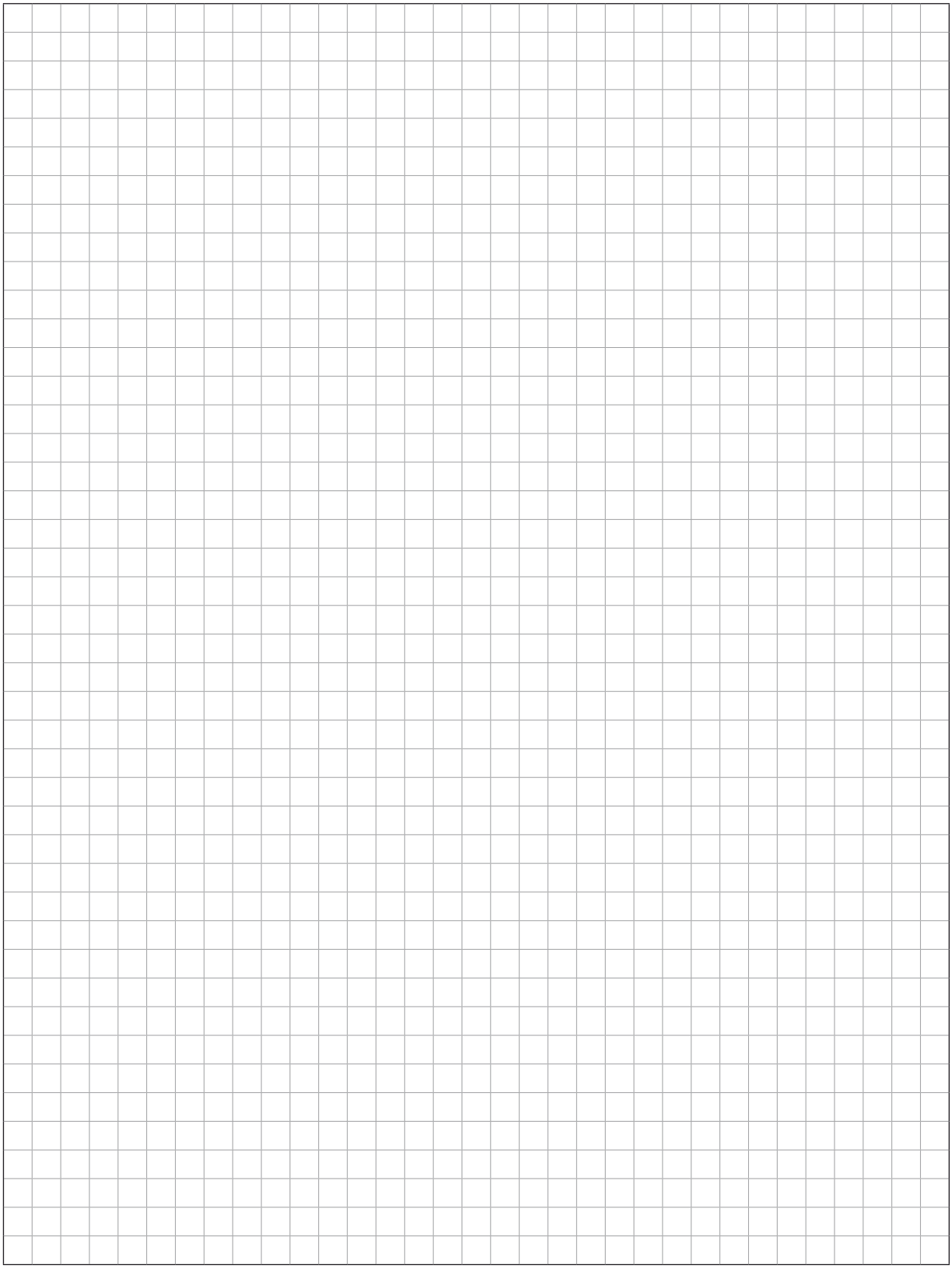

COPPER CABLING COMPONENTS

ZPAS-NET TELECOMMUNICATION INFRASTRUCTURE

Reliability, security, confidence

In modern business environment, influenced by constant changes and modifications, it is very important to secure work of communication systems and reliability of cable and wire infrastructure. It can be achieved through choosing solutions, which belong to companies with huge trade experience, recognized on the market, offering high quality products legitimized by certificates issued by independent laboratories.

Full security of data and cable infrastructure can only be assured by a system installed by professional and authorized installers with highly developed skills confirmed by the producer.

The authorized contractors of ZPAS-NET are the best installing companies. The company takes care of their appropriate qualifications; offering advanced training programs and technical support.

ZPAS-NET co-operates only with trusted, authorized partners. We are convinced that once you decide to order their services they will confirm their professionalism during installation works.

The warranty of safety for user of cable system includes not only high quality products and professional service but also warranty of the system. The procedure of obtaining ZPAS-NET warranty of the system is not complicated and it is the customer who decides on the period of guarantee duration. The guarantee embraces installations performed by companies authorized by ZPAS-NET The longest possible period of duration is "life time" guarantee, the shortest period is 5 years.

The Powerlink Structured Cabling system consist of 5 subsystems:

- PowerLink system UTP category 5e.
- PowerLink TX system UTP category 6.
- PowerSafe System STP category 5e
- PowerSafe TX System STP category 6.
- PowerVS - telephone system.

PowerLink 5e system, 5e category, UTP

PowerLink 5e system, 5e category, UTP - this is a cable system compatible with trade standards defining all technical parameters for 5e category, that is EIA/TIA 568B.2, ISO11801, EN 50173.

The basis for the system is a universal IDC (insulation displacement contact) connection compatible with 110 and LSA connections. These connections are placed in distribution panels and telecommunication outlets.

Unshielded 5e category, UTP cable is of special construction providing increased resistance against mechanical damages.

Accessible in PVC and LSOH coatings, telecommunication outlets are realized through universal modules. These are keystone RJ45 UTP, 5e category transmission modules placed in front plates 22.5 x 45 mm with anti-dust shutter. ZPAS-NET also offers systems of frames and wall-mounted boxes as well as electrical sockets to be applied in dedicated supplying installations.

In smaller wall-mounted installations single and dual superficial sockets may turn out to be necessary. These are RJ45 UTP, 5e category with RJ connection without anti dust shutter.

Distribution panels in 1 U height with 24 RJ45 ports and in 2 U height with 48 RJ45 ports are constructed on the basis of specially designed printed circuits providing 5e category at maximal density of connections.

Patch cords are made of cable of "stranded type" at the section of 26 AWG what causes their flexibility and practically full resistance against mechanical damages. Smaller section of patch cords provides greater possibilities of them being placed in "ordering panels" in a distribution cabinet.

ZPAS-NET TELECOMMUNICATION INFRASTRUCTURE

PowerLink TX system, 6 category, UTP

PowerLink TX system, 6 category, UTP - this is a cable system compatible with EIA/TIA 568B.2 norm, specifying parameters for 6 category, dedicated for application in transmission systems compliant with 1000 Base-TX protocol.

Unshielded UTP, 6 category cable has a special construction providing increased resistance against mechanical damages and improving transmission parameters. It is equipped with special plastic divider separating single pairs. Available in PVC and LSOH coatings.

Telecommunication sockets are realized on the basis of universal modules. These are keystone RJ45, UTP, 6 category placed in front plates 22.5 x 45 mm with anti-dust shutter. The offer also includes sockets in „Polish" standard of fixing.

Distribution panels in 1U height with 16 or 24 RJ45 ports realized on the basis of modular patch panels and RJ45 UTP, 6 category modules.

The characteristic feature of patch cords is application of special type RJ45 plugs fixed on the cable by means of molding technology. This solution improves transmission parameters of patch cords and protects cable's connection through modular pin.

PowerSafe system, 5e category, STP

PowerSafe system, 5e category, STP - this is a shielded cable system compatible with trade standards defining all the technical parameters for 5e category, that is EIA/TIA 568B.2, ISO11801, EN 50173. The offer includes two versions of shielding: fully shielded and with continuity of screening.
Shielded FTP cable, 5e category has an additional grounding wire parallel to conductor's pairs. It also has two layers of braid of artificial and aluminum foil. Available in PVC and LSOH coating.

Telecommunication outlets are realized on the basis on universal transmission modules. These are keystone RJ45 STP, 5e category fully shielded and continuous screen transmission modules, placed on front plates 22.5 x 45 mm with anti-dust shutter. The offer also includes „Polish" standard of fixing.

16 and 24 port distribution panels in 1 U height are realized on the basis of modular blank patch panels and keystone RJ45 STP, 5e category modules fully shielded and with continuity of shielding.

Patch cords are made of stranded type cable at the section of 24 AWG with exceptional as for STP flexibility. Available in four colours.

Power VS - telephonic system

Power VS is a system of 10 pair telephonic terminal blocks based on ID connection of LSA type. The system includes disconnect modules in dry and gel version, connecting modules and accessories such as grounding elements, descriptive fields, single and multi-pair protections against overvoltage, test cables and mounting boxes.

Wall-mounted rails for fixing terminal blocks and panels of terminal blocks in 19**"** standard supplement the offer.

PATCH PANELS CATEGORY 5e

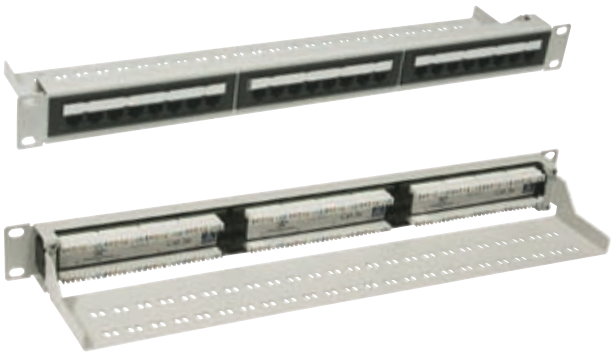

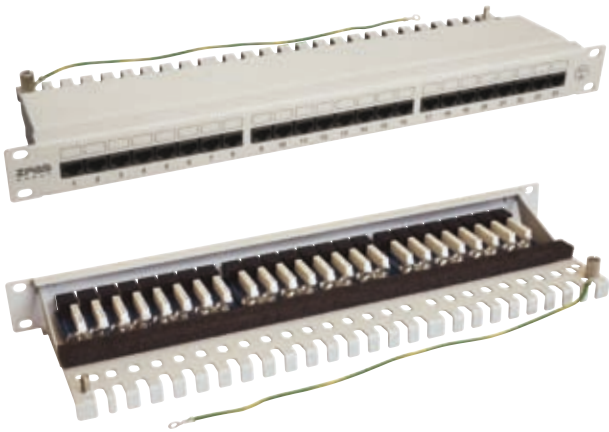

- 19" standard.
- The basis of cat. 5e network system, designed for main and through distribution points of fast telecommunications systems.
- UTP panels are constructed on the basis of specially designed boards with compensation circuit.
- Equipped with universal IDC (Insulation Displacement Contact), compatible with 110 and Krone connectors in 568A/B standard.
- The drawer type STP patch panel is equipped with grounding strip providing connection of the cable shield to panel shield.
- Place for cable labels.
- Convenient use and reconfiguration.
- The all panels, in addition to T-SO-900-048, includes cable ties and assembly hardware.

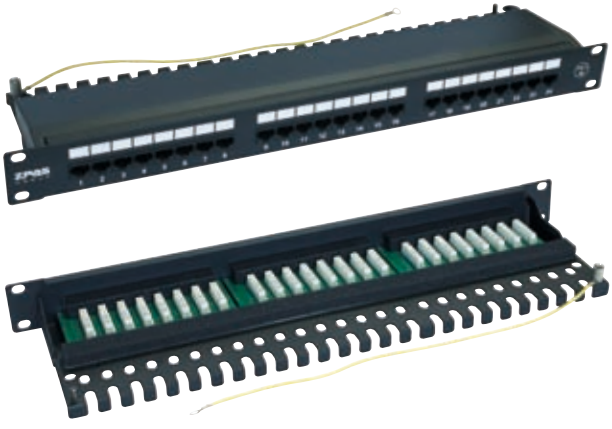

Patch panel UTP 19" x 1 U, cat. 5e, 24 ports
grey (RAL 7035) with cable management bar - cat. no. WNK-805-114
grey with cable management tray and cover - cat. no. T-SO-900-035
black with cable management tray and cover - cat. no. T-SO-900-025

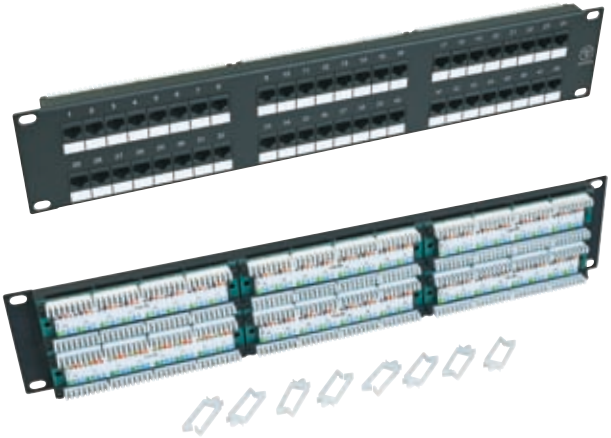

Patch panel UTP 19" x 2 U, cat. 5e, 48 ports
black (RAL 9005) - nr kat. T-SO-900-048

PATCH PANELS CATEGORY 5e

Catalogue number	Dimensions [mm]			Colour	Weight [kg]
	Width	Height	Depth		
WNK-805-114	483	44	100	grey	1.01
T-SO-900-035	483	44	140	grey	1.74
T-SO-900-025	483	44	140	black	1.74
T-SO-900-048	483	88	30	black	1.54
WNK-805-218	483	88	100	grey	1.39
WNK-805-524	483	44	250	grey	2.27
T-SO-805-536	483	44	140	grey	1.74
T-SO-805-526	483	44	140	black	1.74

Material: sheet steel

Surface finish: powder painting

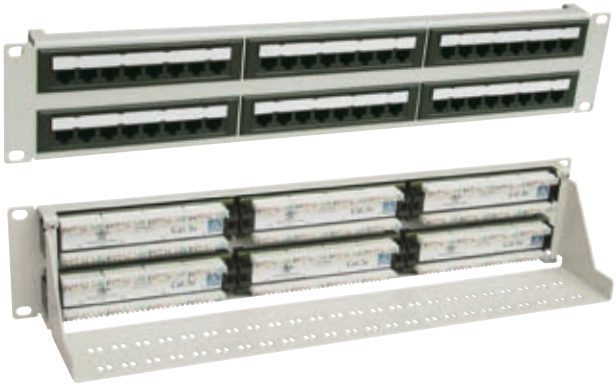

Patch panel UTP 19" x 2 U, cat. 5e, 48 ports
grey (RAL 7035) with cable management tray - cat. no.WNK-805-218

Patch panel - drawer type STP 19" x 1 U, cat. 5e, 24 ports
grey (RAL 7035) - cat. no. WNK-805-524

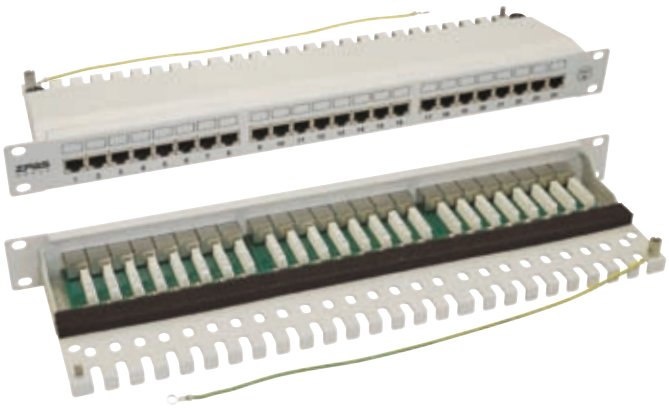

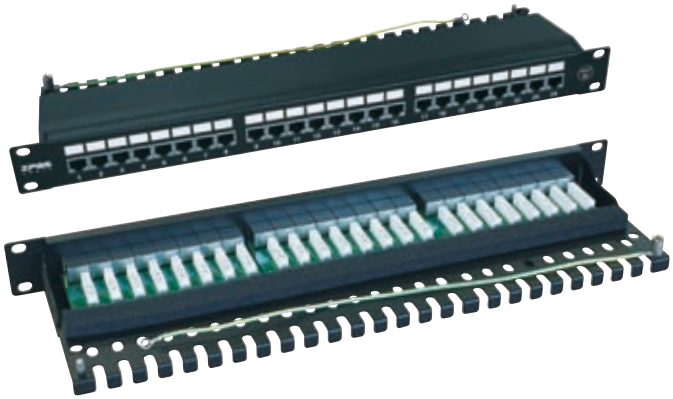

Patch panel STP 19" x 1 U, cat. 5e, 24 ports
grey with cable management tray and cover - cat. no. T-SO-805-536
black with cable management tray and cover - cat. no. T-SO-805-526

PATCH PANELS CATEGORY 6, 6_A

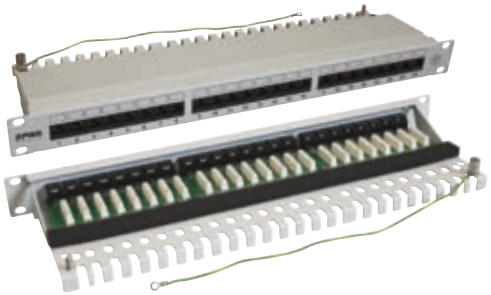

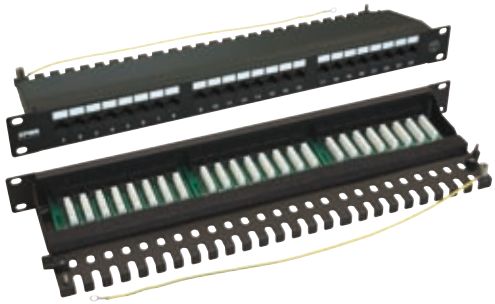

Patch panel UTP 19" x 1 U, cat. 6, 24 ports
grey with cable management tray and cover - cat. no.T-SO-806-130
black with cable management tray and cover - cat. no.T-SO-806-120

- 19" standard.
- The basis of cat. 6 and 6_A network system, designed for main and through distribution points of fast telecommunications systems.
- Panels are constructed on the basis of specially designed boards with compensation circuit.
- Equipped with universal IDC (Insulation Displacement Contact), compatible with 110 and Krone connectors in 568A/B standard.
- Place for cable labels.
- Convenient use and reconfiguration.
- All panel sets include cable ties and assembly hardware.

Catalogue number	Dimensions [mm]			Colour	Weight [kg]
	Width	Height	Depth		
T-SO-806-130	483	44	140	grey	1.74
T-SO-806-120	483	44	140	black	1.74
T-SO-900-136	483	44	140	grey	1.74
T-SO-900-126	483	44	140	black	1.74
T-SO-806-527	483	44	140	black	1.74
T-SO-806-526	483	44	140	black	1.74

Material: sheet steel

Surface finish: powder painting

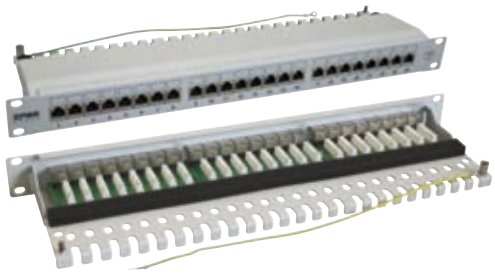

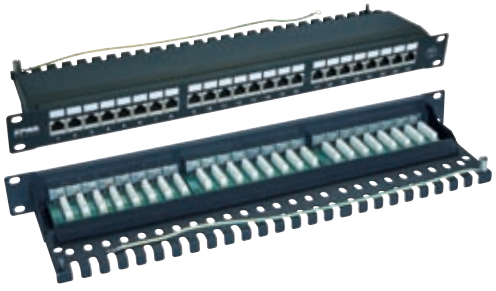

Patch panel STP 19" x 1 U, cat. 6, 24 ports
grey with cable management tray and cover - cat. no. T-SO-900-136
black with cable management tray and cover - cat. no. T-SO-900-126

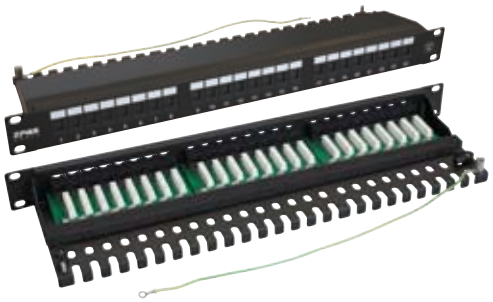

Patch panel UTP 19" x 1 U, cat. 6_A, 24 ports
black with cable management tray, cover and anti-dust shutter
- cat. no. T-SO-806-527

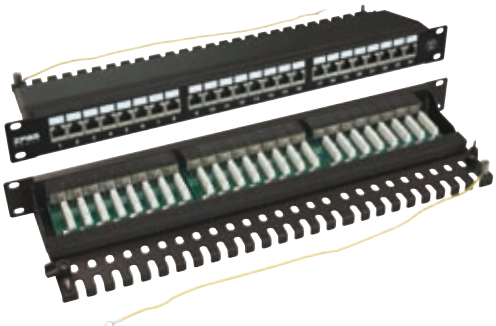

Patch panel STP 19" x 1 U, cat. 6_A, 24 ports
black with cable management tray, cover and anti-dust shutter
- cat. no. T-SO-806-526

Sample configuration of user outlet

Outlet with 2 mosaic-type faceplates
To configure complete subscriber point for 2 faceplates in 22.5 x 45 mm standard the following elements should be applied:
- Wall-mounted box for 2 faceplates, cat. no. T-SO-828-111 - 1 pc.
- Support for 2 faceplates cat. no. T-SO-828-711 - 1 pcs.
- Box cover 45 x 45 mm for 2 faceplates, cat. no. T-SO-828-811 - 1 pc.
- Faceplate 22.5 x 45 with shutter for keystones cat. no. T-SO-828-050 - 2 pcs.
- Keystone module - 2 pcs.
- Instead of 2 faceplates electrical socket 45 x 45 mm can be used.

User outlet with 4 mosaic-type faceplates
To configure complete user outlet for 4 faceplates in 22.5 x 45 mm standard the following elements should be applied:
- Wall-mount box for 4 faceplates, cat. no. T-SO-828-112 - 1 pc.
- Support for 4 faceplates cat. no. T-SO-828-712 - 1 pc.
- Box cover 90 x 45 mm for 2 faceplates cat. no. T-SO-828-812 - 1 pc.
- Faceplate 22.5 x 45 with shutter for keystones cat. no. T-SO-828-050 - 4 pcs.
- Keystone module - 4 pcs.
- Instead of 2 faceplates electrical socket 45 x 45 mm can be used.

User outlet with 6 mosaic-type faceplates
To configure complete user outlet for 6 faceplates in 22.5 x 45 mm standard the following elements should be applied:
- Wall-mounted box for 6 faceplates, cat. no. T-SO-828-113 - 1 pc.
- Support for 6 faceplates cat. no. T-SO-828-713 - 1 pc.
- Box cover 135 x 45 mm for 2 faceplates cat. no. T-SO-828-813 - 1 pc.
- Faceplate 22,5 x 45 with shutter for keystones cat. no. T-SO-828-050 - 6 pcs.
- Keystone module - 6 pcs.
- Instead of 2 faceplates electrical socket 45 x 45 mm can be used.

BOXES AND FACEPLATES

Faceplate 22.5 x 45 mm for keystone module
- cat. no. T-SO-828-050

Faceplate for keystone module

- Possibility of configuration of complete user outlet using keystone sockets:
  UTP RJ11 and UTP, STP RJ45 cat. 5e, 6 or 6_A.
- Designed to fit places in boxes and universal panels.
- Faceplate are snap fastened (tools are not required).
- Faceplate are equipped with anti-dust shutter.

Catalogue number	Dimensions [mm]			Weight [kg]
	Width	Height	Depth	
T-SO-828-050	22,5	45	10	0.004

Material: thermoplastic ULV94V0

Blind faceplate 22.5 x 45 mm - cat. no. T-SO-828-030

Blind faceplate

- Designed for masking of unused fields in faceplates and universal panels.
- Snap fastening (tools are not required).

Catalogue number	Dimensions [mm]			Weight [kg]
	Width	Height	Depth	
T-SO-828-030	22,5	45	7	0.004

Material: thermoplastic ULV94V0

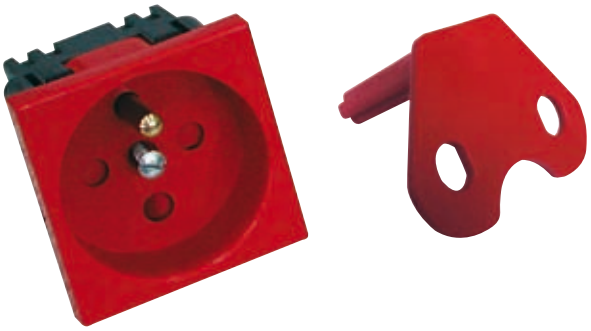

Electrical socket 45 x 45 mm with safety shutter, red - cat. no.T-SO-839-515
Unlock key - cat. no. T-SO-839-520

Electrical sockets 45 x 45 mm

- Electrical sockets in 45 x 45 mm standard are designed for electrical installation dedicated for telecommunications devices.
- Excellent integration with transmission sockets in 45 x 22.5 mm standard.

Catalogue number	Colour	Dimensions [mm]			Weight [kg]
		Width	Height	Depth	
T-SO-839-515	red	45	45	32	0.010
T-SO-839-520	red	31	34	24	0.001

Material: thermoplastic ABS and UL94V0

ELECTRICAL PARAMETERS:

- Max. current .....16 A
- Voltage .....250 V ~

Wall mounted boxes

- Ideal for surface installation, possibility of right/left cable entry.
- T-SO-828-111 box accommodates 2 sockets.
- T-SO-828-112 box accommodates 4 sockets.
- T-SO-828-113 box accommodates 6 sockets.
- Esthetic look, easy fitting using 2 screws (not included).
- Delivery with mounting screws for cover or for support frame.

Catalogue number	Capacity	Dimensions [mm]			Weight [kg]
		Width	Height	Depth	
T-SO-828-111	2 sockets	81	81	40	0.040
T-SO-828-112	4 sockets	148	81	40	0.065
T-SO-828-113	6 sockets	203	81	40	0.100

Spacing of mounting screws:
- T-SO-828-111 box - 60 mm
- T-SO-828-112 box - 60 x 57 mm
- T-SO-828-113 box - 60 x 57 x 57 mm

Material: thermoplastic ABS

Colour: white

Wall mounted boxes
1) for 2 sockets - cat no. T-SO-828-111
2) for 4 sockets - cat no. T-SO-828-112
3) for 6 sockets - cat no. T-SO-828-113

Under surface wall boxes

- Intended for empty gypsum walls.
- Reliable and quick fastening using screws with wide pitch.
- Delivery with screws for support mounting.

Catalogue number	Capacity	Dimensions [mm]			Weight [kg]
		Width	Height	Depth	
T-SO-828-411	2 sockets	65	65	40	0.030
T-SO-828-412	4 sockets	121,8	65	40	0.045
T-SO-828-413	6 sockets	178,6	65	40	0.060

Spacing of mounting screws:
- T-SO-828-411 box - 60 mm
- T-SO-828-412 box - 60 x 57 mm
- T-SO-828-413 box - 60 x 57 x 57 mm

Material: thermoplastic ULV94V0

Colour: yellow

Under surface wall boxes
1) for 2 sockets - cat. no. T-SO-828-411
2) for 2 sockets - cat. no. T-SO-828-412
3) for 2 sockets - cat. no. T-SO-828-413

BOXES AND FACEPLATES

1

2

3

1) 1G cover for 2 faceplates 22.5 x 45 mm - cat. no. T-SO-828-811
2) 2G cover for 4 faceplates 22.5 x 45 mm - cat. no. T-SO-828-812
3) 3G cover for 6 faceplates 22.5 x 45 mm - cat. no. T-SO-828-813

Covers for installations boxes

- Covers designed for universal wall-mounted boxes.
- Rounded look, without sharp edges.
- Fastened using support frame.
- Intended for boxes: T-SO-828-111, T-SO-828-112, T-SO-828-113 or T-SO-828-411, T-SO-828-412, T-SO-828-413.

Catalogue number	Dimensions [mm]			Weight [kg]
	Width	Height	Depth	
T-SO-828-811	81	81	9	0.015
T-SO-828-812	148			0.022
T-SO-828-813	203			0.029

Material: thermoplastic ULV94V0

Colour: white

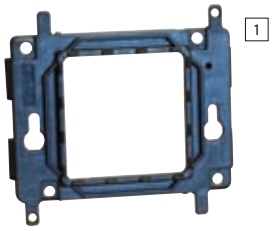
1

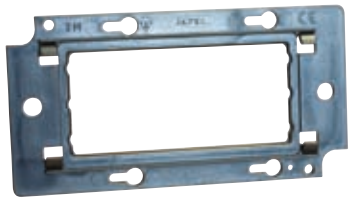
2

3

1) 1G support for 2 mosaic faceplates 22.5 x 45 mm - cat. no. T-SO-828-711
2) 2G support for 4 mosaic faceplates 22.5 x 45 mm - cat. no. T-SO-828-712
3) 3G support for 6 mosaic faceplates 22.5 x 45 mm - cat. no. T-SO-828-713

Support frames for wall boxes

- Support frames makes possible mounting of 22.5 x 45 mm faceplates in universal wall boxes.
- Easy fastening in box using screws (delivered with the box).

Catalogue number	Dimensions [mm]			Weight [kg]
	Width	Height	Depth	
T-SO-828-711	76.5	70.3	11.7	0.010
T-SO-828-712	138	71	11.7	0.020
T-SO-828-713	196	71	11.7	0.030

Material: thermoplastic ABS

Colour: black

Transmission modules cat. 5e UTP, STP

- Keystone modules RJ45 cat. 5e are designed for user outlet, as well as patch panels.
- The connection match the TIA/EIA 568A/B norm and cat. 5e requirements.
- The keystones are terminated using universal IDC (Insulation Displacement Contact) with punch-down cap for quick installation.
- Modules T-SO-831-918 are built using monolithic construction from ABS.
- Restant modules are built using printed circuit board.
- List of mounting accessories available on page 233 (See configuration of user outlet).
- Available in versions: STP cat. 5e fully shielded (360°).

Catalogue number	Dimensions [mm]			Weight [kg]
	Width	Height	Depth	
T-SO-831-918	16	22	30	0.0055
T-SO-831-919	16	22	33	0.0085
T-SO-832-927	18	24	35	0.0150

Material of case: socket - thermoplastic ABS and UL94V0.

STP module shielding cover: stainless steel

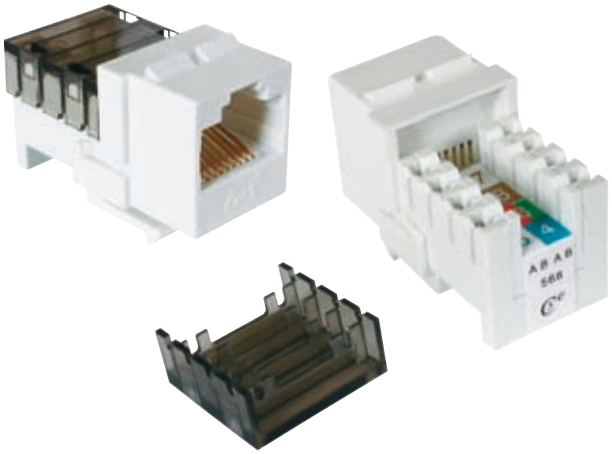

Keystone HD, Monoblock, category 5e, top clamped
- cat. no. T-SO-831-918

Keystone UTP RJ45 cat. 5e black with anti-dust shutter
- cat. no. T-SO-831-919

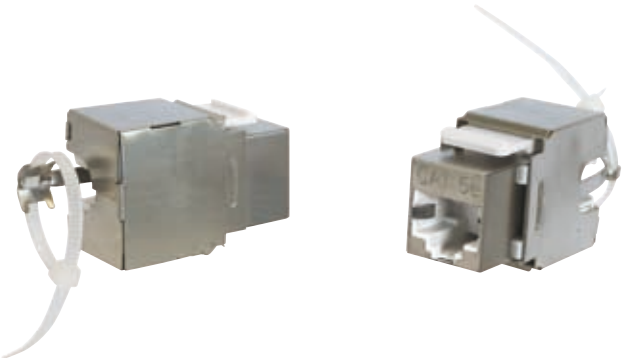

Keystone STP RJ45 category 5e, rear clamped
- cat. no. T-SO-832-927

KEYSTONES AND SOCKETS

Keystone UTP RJ45 category 6, rear clamped
- cat. no. T-SO-834-928

Transmission modules cat. 6 and 6_A UTP, STP

- Keystone modules RJ45 cat. 6 and 6_A are designed for user outlet, as well as patch panels.
- Possibility of connecting cables in 568A and 568B standards.
- Possesses advantages of universal displacement contact.

Catalogue number	Dimensions [mm]			Weight [kg]
	Width	Height	Depth	
T-SO-834-928	17	22	35	0.0090
T-SO-834-911	16	22	34	0.0090
T-SO-832-924	17	22	35	0.0255
T-SO-834-932	17	22	35	0.0090
T-SO-834-933	17	22	35	0.0255

Material of case: thermoplastic ABS and UL94V0.

STP module shielding cover: phosphor bronze

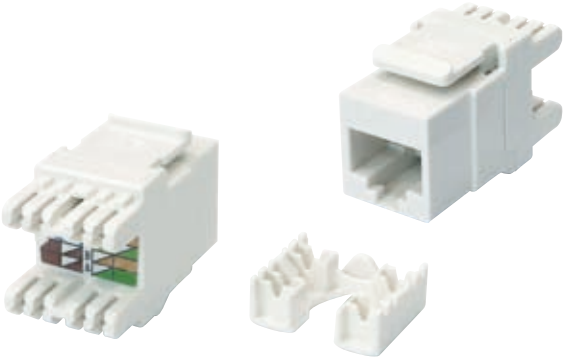

Keystone STP RJ45 category 6, rear clamped
- cat. no. T-SO-834-911

Keystone UTP RJ45 category 6_A, rear clamped
- cat. no. T-SO-834-932

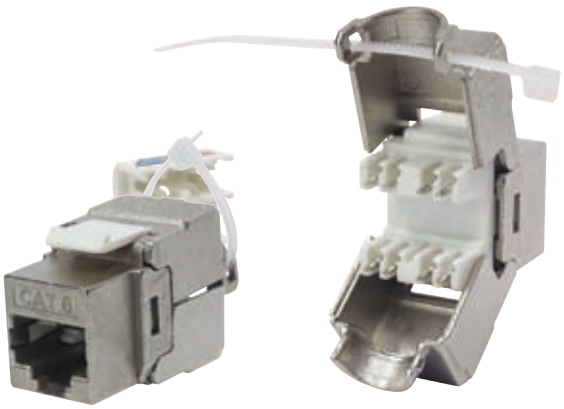

Keystone STP RJ45 category 6, rear clamped
- cat. no. T-SO-832-924

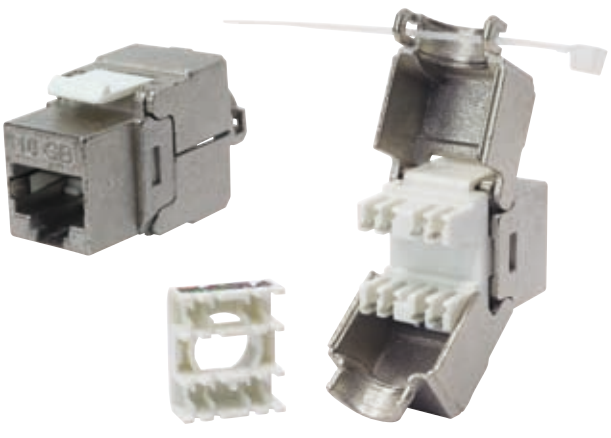

Keystone STP RJ45 category 6_A, rear clamped
- cat. no. T-SO-834-933

Telephone patch panel

- 19" panel 50 x RJ45 is designed for termination of vertical cabling and accepts multi-pair unshielded telecom cables or 4 pairs twisted cable.
- Ensures transmission parameters required for telephone applications, easy and convenient mounting, high durability of wires and easy cross connections.
- High density of cross connections (double pair modular RJ45 sockets).
- The T-SO-807-138 and T-SO-807-158 panels includes assembly caps, cable ties and duct markings.
- In the back panel these is a shelf to provide easy cable management.

Catalogue number	Dimensions [mm]			Colour	Weight [kg]
	Width	Height	Depth		
WNK-807-155	483	44	110	grey	1,28
T-SO-807-138	483	44	140	grey	1,56
T-SO-807-158	483	44	140	black	1,56

Material: sheet steel

Surface finish: powder painting

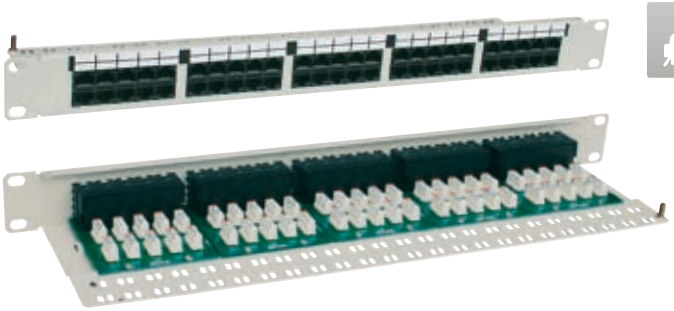

Telephone patch panel UTP 19" x 1 U, cat. 3, 50 ports RJ45 8P4C
grey (RAL 7035) - cat. no. WNK-807-155

Telephone patch panel UTP 19" x 1 U, cat. 3, 50 ports RJ45 8P6C
grey - cat. no. T-SO-807-138
black - cat. no. T-SO-807-158

POWER VS TELEPHONE SYSTEM

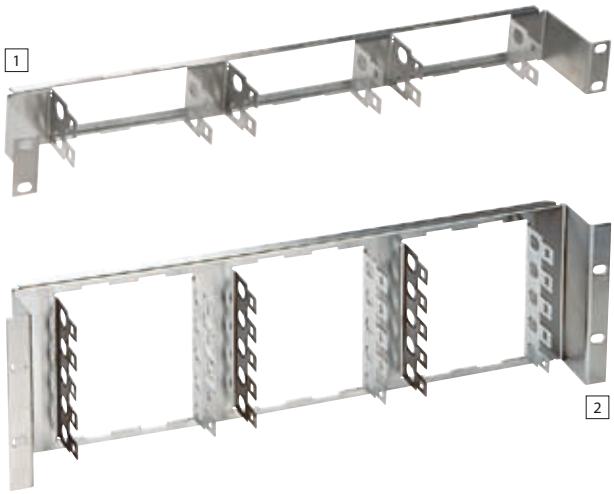

1) Mount frame for telephone modules 19" x 1 U, for 6 modules
- cat. no. WNK-803-160

2) Mount frame for telephone modules 19" x 3 U, for 15 modules
- cat. no.WNK-803-115

Mount frame for telephone modules

- Produced of stainless steel.
- Equipped with sockets for telephone modules.
- Available in two sizes:
  - 19" x 1 U - 6 modules
  - 19" x 3 U - 15 modules

Catalogue number	Capacity	Dimensions [mm]			Weight [kg]
		Width	Height	Depth	
WNK-803-160	6 modules	483	44 (1U)	81	0.300
WNK-803-115	15 modules		133 (3U)		0.422

Material: stainless sheet steel 0.75 mm

Surface finish: none

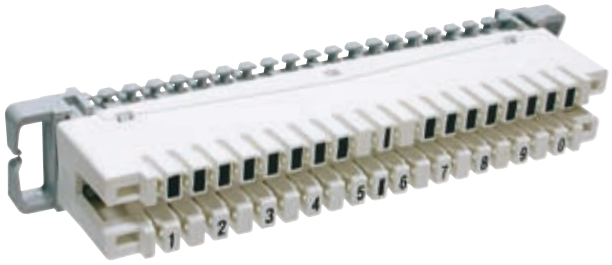

Disconnecting module, 10 pairs, 1-0, white
- cat. no. T-SO-870-500

Telephone connectors

Disconnecting module

Disconnecting module is basis of telephone system. Module is placed on mount frame. Equipped with IDC contacts for termination of wires. There is also possibility of placing on them a set of magazine of gas surge arrestors. The module possesses shorted contacts. Application of insulation plug allows to disconnect any line.

Case material ..... thermoplastic ULV94V0
Connector material ..... silver plated phosphor bronze
Wire acceptance ..... 0.4 - 0.8 mm
Contact resistance ..... 5 mΩ
Accordance with norm ..... DIN 41611
Category 3
Weight ..... 0.060 kg
Dimensions ..... 124.0 x 19.5 x 40.0 mm
Colour ..... white

Magazine for tri-pole arrestors

Equipping telephone module with gas surge arrestors with thermal protection allows to protect system against dangerous consequences of external overvoltage. At the moment of emergency destructed is only arrestor, providing protection of other elements from destruction. Special contacts fitted on both sides of the magazine provide automatic connection of middle strip with frame.

TECHNICAL DATA OF MAGAZINE

Case material ..... thermoplastic ULV94V0
Contacts material ..... silver plated phosphor bronze
Weight ..... 0.080 kg
Dimensions ..... 113.0 x 22.2 x 41.0 mm
Colour ..... gray

TECHNICAL DATA OF ARRESTORS

Rated voltage of ignition [a-e, b-e] ..... 230 V 20 %
Maximum output voltage [1 kV/ms] ..... < 450 V
Rated voltage [8/20 ms, a+b-e] ..... 20 kA
Max. alternating current [a+b-e, 50 Hz, 1 s] ... 10 A
Insulation resistance [for 100 V] ..... $10^{10}\,\Omega$
Capacity [a-e, b-e] ..... < 1.5 pF
Capacity [a-b] ..... < 1.0 pF
Weight ..... 0.0024 kg

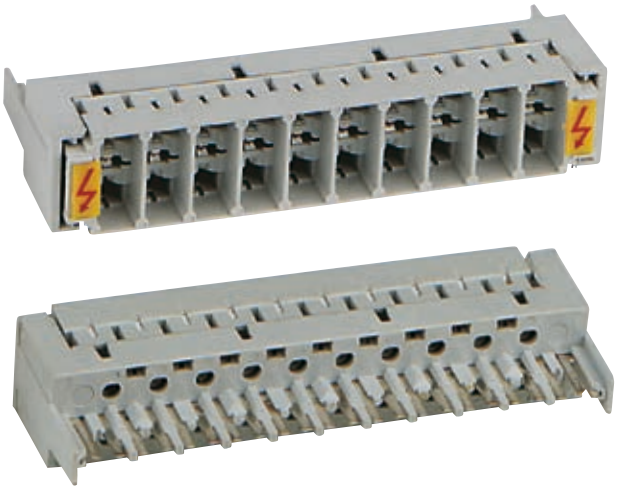

Magazine of arrestors (without arrestors)
- cat. no. T-SO-870-540

Tri pole surge gas arrestor 230 V
- cat. no. T-SO-870-542

Labels and covers

- The telephone system contains elements which simplify indication of particular connectors.
- Labels are equipped with paper labels, making it possible writing of description.

Catalogue number	Dimensions [mm]	Weight [kg]
T-SO-870-562	108 x 17 x 14	0.015

Cover for module
- cat. no. T-SO-870-562

POWER VS TELEPHONE SYSTEM

Distribution box for 3 modules - without modules
- cat. no. T-SO-870-570

Distribution boxes

Distribution boxes provide safe installation of telephone modules. Made from non-flammable material, are necessary protection of installed equipment against casual mechanical damages.

Catalogue number	Dimensions [mm]			Weight [kg]
	Width	Height	Depth	
T-SO-870-570	140	152	55	0.20
T-SO-870-571	235	190	105	0.61
T-SO-870-572	220	272	108	0.88

Material: non-flammable ABS thermoplastic.

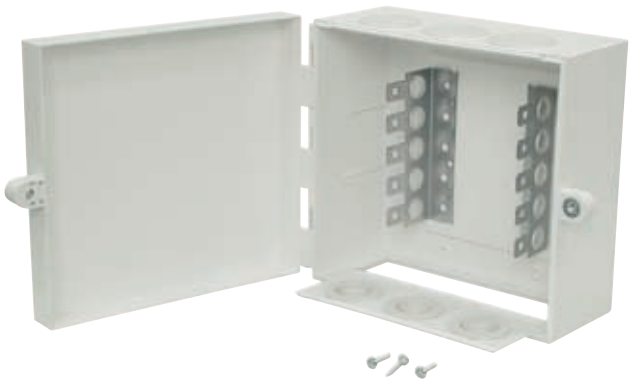

Distribution box - for 5 modules without modules
- cat. no. T-SO-870-571

Distribution box for 10 modules - without modules
- cat. no. T-SO-870-572

TOOLS AND ACCESSORIES FOR INSTALLERS

Punch down tool for telephone connectors

- Tool for Krone system.
- Built-in scissors for cutting of wire.
- Additional endings for taking off telephone modules from fame and arrestors from magazine.

Catalogue number	Dimensions [mm]			Weight [kg]
	Width	Height	Lenght	
T-SO-881-302	35	20	180	0.120
T-SO-870-530	177	37.5	21	0.060
T-SO-900-605	177	35	17	0.055

Case material: plastic

Ending material: tooling steel

T-SO-881-302

T-SO-870-530

T-SO-900-605

Crimp tool for plugs WE8W, WE6W (for two plugs)

- Intended for modular plugs 8P8C (RJ45), 6P6C (RJ12), 6P4C (RJ11), 6P2C.
- With cable stripper and cutter for flat cables KP-8, KP-6.

Catalogue number	Dimensions [mm]			Weight [kg]
	Width	Height	Lenght	
T-SO-885-104	60	20	205	0.280

Handle material: plastic

Cross cable stripper

- Adjustable cable stripper and cutter with replaceable knife.
- Four UTP/STP cables, flat telephone cables 2C, 4C, 6C, 8C, and for 18-22 AWG wires.

Catalogue number	Dimensions [mm]			Weight [kg]
	Width	Height	Lenght	
T-SO-882-300	53	17	122	0.080

Case material: plastic

TOOLS AND ACCESSORIES FOR INSTALLERS

Fluke DTX-1800 cable analyzer (front and rear views)
- cat. No. T-SO-883-210

Fluke DTX-1800 (DTX-1800 INTL) cable analyzer

DTX-family cable testers are durable and handy measuring instruments designed for the certification, identification of damage and passporting of cable systems, both copper and optical fibre types. DTX-1800 certifies copper cabling as Class F (600 MHz) in less than 45 seconds and category 6 in less than 12 seconds. It meets requirements associated with the accuracy level III and proposed accuracy level IV.

TESTER PROPERTIES:

- **Standards tested:** TIA Category 3 and 5e per TIA/EIA-568B; TIA Category 5 (1000BASE-T) per TIA TSB-95; TIA Category 6 per TIA/EIA-568B.2-1 (Addendum #1 to TIA/EIA-568B.2); ISO/IEC 11801 Class C, D, E, F, EN 50173 Class C, D, E; ANSI TP-PMD IEEE 802.3 10BASE-T; 100BASE-TX; 1000BASE-T; IEEE 802.5 (STP, IBM Type 1, 150 Ohm) Token Ring, 4 Mbps and 16 Mbps
- **Auto-test speed:** 10 s (complete auto-test of UTP cat. 6 cabling)
- **Tests performed:** connection map; length; propagation delay; delay skew; DC loop resistance; Insertion Loss; Return Loss (RL); RL @ Remote NEXT; NEXT @ Remote; Attenuationto-crosstalk Ratio (ACR); ACR @ Remote; ELFEXT; ELFEXT @ Remote; Power Sum ELFEXT; PSELFEXT @ Remote; Power Sum NEXT; PSNEXT @ Remote Power Sum ACR; PSACR @ Remote
- **Tone generator:** integrated, 440 Hz ÷ 831 Hz
- **Operating range:** 900 MHz
- **Accuracy level:** IV
- **Display:** 3.7", resolution 240x320, passive colour type with backlighting
- **Operation in active network:** Yes (optional DTX-NSM adapter)
- **Graphic memory of measurements:** 250
- **External memory:** 16 MB
- **USB connection:** Yes
- **RS-232 connection:** Yes
- **Channel cat. 6 type adapters:** Yes
- **Additional features:** incorporated locator of faults in fibre optic cables (VFL), autotest initiation from the remote unit
- **Operating temperature range:** 0 °C ÷ 45 °C
- **Maximum acceptable ambient humidity:** 0 % ÷ 70 %, non-condensing
- **Vibration resistance:** random vibrations, 2 g, 5 Hz ÷ 500 Hz
- **Impact resistance:** drop from a height of 1 m without attached modules
- **Maximum operating altitude:** 4000 m
- **Power supply:** Li-Ion battery, 7.4 V, 4000 mAh
- **Calibration validity:** 1 year
- **Supported languages:** English, French, German, Spanish, Portuguese, Italian, Japanese, simplified Chinese
- **Manufacturer:** Fluke Networks

DC loop resistance test:
- Parameter.....twisted pair wire
- Range .....0 Ω ÷ 53 Ω
- Resolution .....0.1 Ω
- Accuracy.....± (1 Ω + 1 %)

Delay skew:
- Parameter.....twisted pair wire
- Range .....0 ns ÷ 100 ns
- Resolution 1ns
- Accuracy.....± 10 ns

Length measurement for twisted pair wire:
- Range .....800 m (without remote unit), 150 m (with remote unit)
- Resolution .....0.1 m
- Accuracy.....± (1 m + 4 %)

Catalogue number	Dimensions [mm]			Weight [kg]
	Width	Height	Thickness	
T-SO-883-210	112	216	60	1.1

Modular plug

- Effective protection of cable and plug against mechanical damages.
- Accordance with category 5e.
- Esthetical look.
- Durable fastening of cable in the plug.
- Flexible thermoplastic material ensures high durability and comfort usage.
- Various types of plugs.
- Package contains 100 pcs.

Case material: thermoplastic UL94V0

Contacts material: phosphor bronze

Contacts plating: 1.25 µm gold over 2.50 µm nickel

Part	Colour / type	Catalogue number	Dimensions [mm]			Weight [kg]
			Width	Height	Depth	
Plug	UTP RJ45 for rounded stranded cable	T-SO-855-030	15	15	28	0.003
	STP RJ45 for rounded solid cable	T-SO-855-130	11	15	23	
Boot	grey	T-SO-855-811	10	12	22	0.003

Modular plug UTP RJ45 for rounded stranded cable
- cat. no. T-SO-855-030

Modular plug STP RJ45 for rounded solid cable
- cat. no. T-SO-855-130

Boot for plug WE8W, grey
- cat. no. T-SO-855-811

PATCH CORDS

Patch cords category 5e and category 6 and 6_A, U/UTP, F/UTP and S/FTP

- Designed for cross connections at distribution points as well as connections of terminals with user outlet.
- Compatible with category 5e, 6 and 6_A.
- Sequence 568B.
- F/UTP cables are resistant from mechanical damages, providing continuity of shielding.
- Five standard length options: 0.5 m, 1 m, 2 m, 3 m, 5 m.
- Equipped with special type RJ45 plugs fixed on the cable by means of moulding technology.

MECHANICAL PARAMETERS:

- Cable insulation material ..... PVC
- Plug case UL94V2
- Plug contacts material..... phosphor bronze
- Plug contacts plating..... gold over nickel;
- Durability ..... > 750 cycles

ELECTRICAL PARAMETERS:

- Maximum voltage..... > 125 V
- Maximum current ..... 1.5 A
- Insulation resistance..... > 500 MΩ

AVAILABLE TYPES OF PATCH CORDS:

- U/UTP cat. 5e and cat. 6 patch cords are available in the following colours: grey, ivory, black, red, green, blue, yellow, orange, brown, purple and pink
- F/UTP cat. 5e and cat. 6 patch cords available in the following colours: grey, ivory, black, red, green, blue, yellow
- S/FTP cat. 6 patch cords available in the following colours: grey, ivory, black, red, green, blue, yellow

We also offer Cross Over, 6_A S/FTP patch cords.

Patch cords category 5e and category 6

Internal data communication cables category 5e, U/UTP and F/UTP

U/UTP cables are designed for horizontal and vertical internal installations in data communication networks that are not exposed to electromagnetic interference.

F/UTP cables are designed for horizontal and vertical internal installations in data communication networks that are particularly exposed to electromagnetic interference.

5e cables routes are designed for operation at frequencies up to 100 MHz, with a bit rate up to 1 Gb/s.

Cables cannot be used to connect power equipment.
Cables are designed for use in an ambient temperature of -20°C to +70°C.
Cables in PVC sheath may be laid at temperatures from 0°C to 50°C.
Cables in sheath made of halogen-free plastic may be laid at temperatures from -10°C to 50°C.
Allowable cable bending radius is 4 x ext. Ø.
Cable pull force should not exceed 20 N per pair.

Standards:
ZN-MADEX-04, ISO/IEC 11801, EN 50173, IEC 61156-5, EN 50288-3-1 (Cat.5e), ANSI/TIA/EIA 568-B.2.
Flammability test under IEC 60332-1

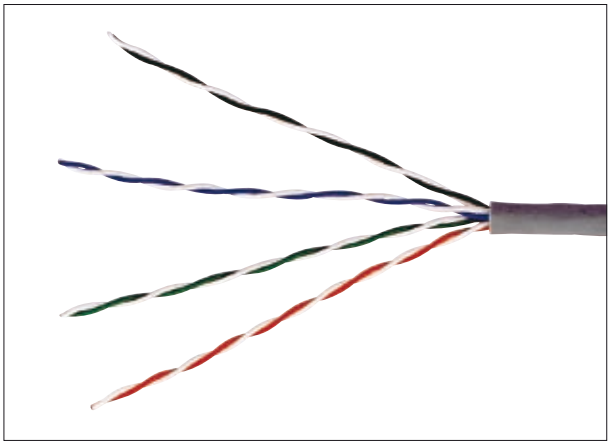

U/UTP 4 pair cable category 5e

SOLID AND STRANDED CABLES

Catalogue number	Type of cable
T-SO-841-161	U/UTP cable, 4 pairs, solid, cat. 5e, ultra link, 305 m
T-SO-841-162	ZPAS U/UTP cable, 4 pairs, solid, cat. 5e, PVC, 305 m
T-SO-841-164	ZPAS U/UTP cable, 4 pairs, solid, cat. 5e, LSOH, 305 m
T-SO-841-160	Powernet U/UTP cable, 4 pairs, solid, cat. 5e, PVC, 305 m
T-SO-844-162	Powernet U/UTP cable, 4 pairs, solid, cat. 5e, LSOH, 305 m
T-SO-841-861	U/UTP cable, 4 pairs, stranded, AWG 24, cat. 5e, 305 m
T-SO-842-461	F/UTP cable, 4 pairs, solid, cat. 5e, PVC, 305 m
T-SO-844-462	F/UTP cable, 4 pairs, solid, cat. 5e, LSOH, 305 m
T-SO-841-167	U/UTP cable, 4 pairs, solid, cat. 5e, Ultralink, 1000 m

On request it is possible to pack cables in sections of different lengths.

Note:
We can also deliver external cables, such as:
External U/UTP cable 4 pairs, solid, cat. 5e, PE, 305 m
- cat. no. T-SO-841-173

DATA TRANSMISSION CABLES

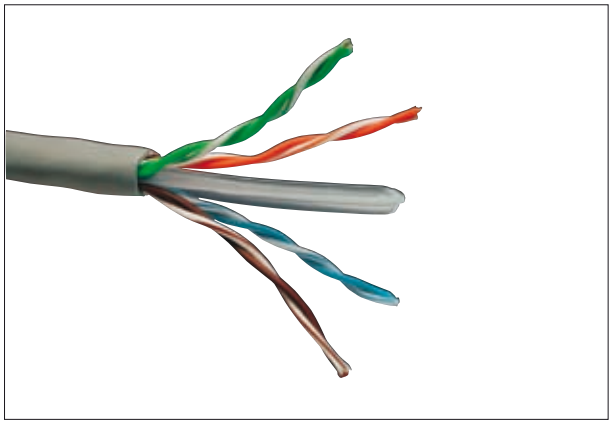

U/UTP 4 pair category 6 cable

Internal data communication cables categories 6 and 7, U/UTP, F/UTP and S/FTP

U/UTP cables are designed for horizontal and vertical internal installations in data communication networks that are not exposed to electromagnetic interference.

F/UTP and S/FTP cables are designed for horizontal and vertical internal installations in data communication networks that are particularly exposed to electromagnetic interference.

6 category cables routes are designed for operation at frequencies up to 250 MHz, with a bit rate over 1 Gb/s.

7 category cables routes are designed for operation at frequencies up to 600 MHz, with a bit rate over 1 Gb/s.

Cables cannot be used to connect power equipment.
Cables are designed for use in an ambient temperature of -20°C to +70°C.
Cables in PVC sheath may be laid at temperatures from 0°C to 50°C.
Cables in sheath made of halogen-free plastic may be laid at temperatures from -10°C to 50°C.
Allowable cable bending radius is 4 x ext. Ø.
Cable pull force should not exceed 20 N per pair.

Standards:
ZN-MADEX-04, ISO/IEC 11801, EN 50173, IEC 61156-5, EN 50288-6-1 (Cat. 6), EN 50288-4-1 (Cat. 7), ANSI/TIA/EIA 568-B.2.
Flammability test under IEC 60332-1

SOLID CABLES

Catalogue number	Type of cable
T-SO-841-663	U/UTP cable, 4 pairs, solid, cat. 6 , PVC, 305 m
T-SO-842-663	F/UTP cable, 4 pairs, solid, cat. 6, PVC, 305 m
T-SO-845-472	S/FTP cable, 4 pairs, solid, cat. 7, LSOH, 305 m

FIBRE OPTIC ENCLOSURES AND ACCESSORIES

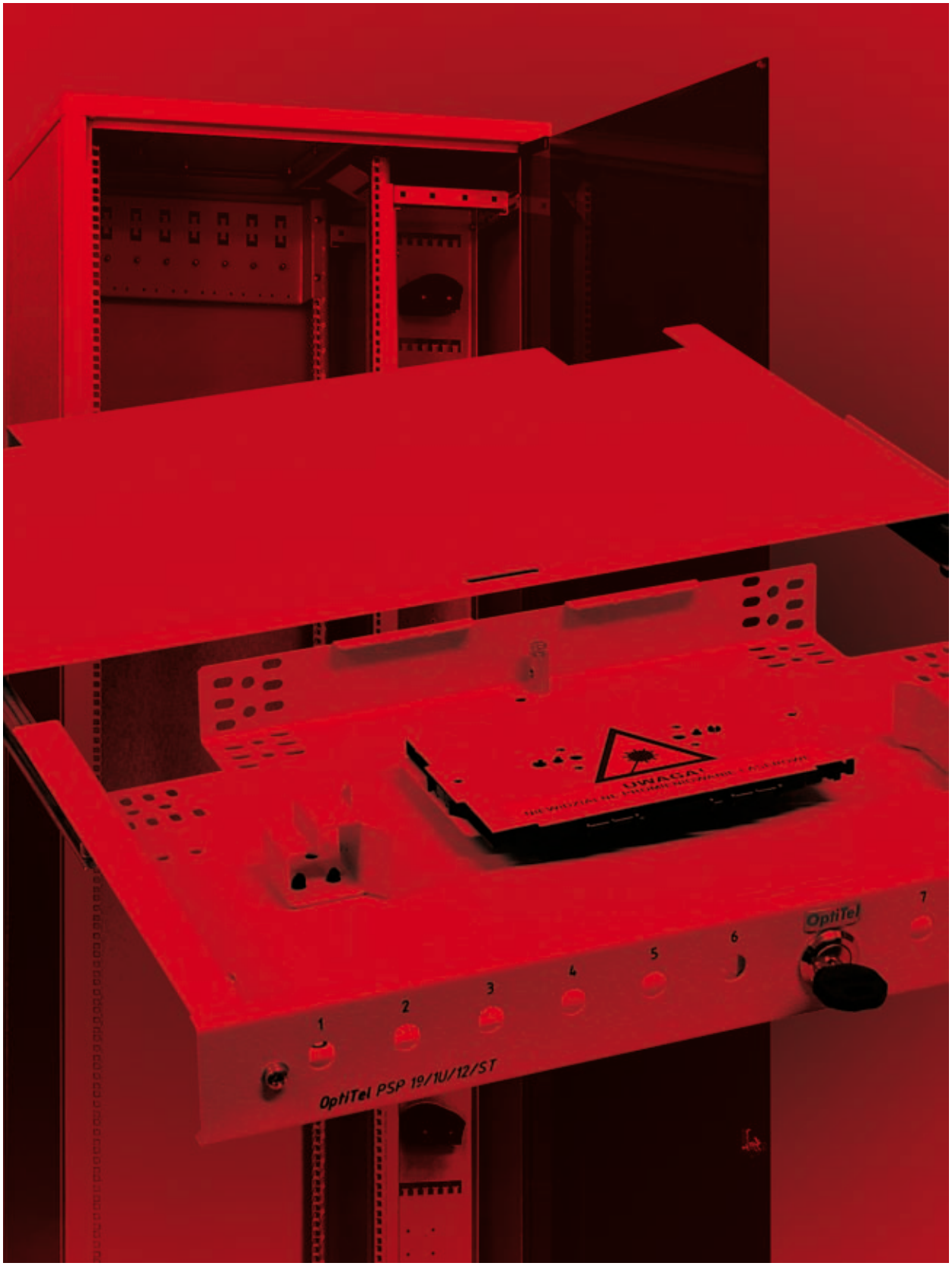

FIBRE OPTIC ENCLOSURES AND ACCESSORIES

SPS 19" OPTITEL CABINET FOR FIBRE OPTIC PATCH PANELS

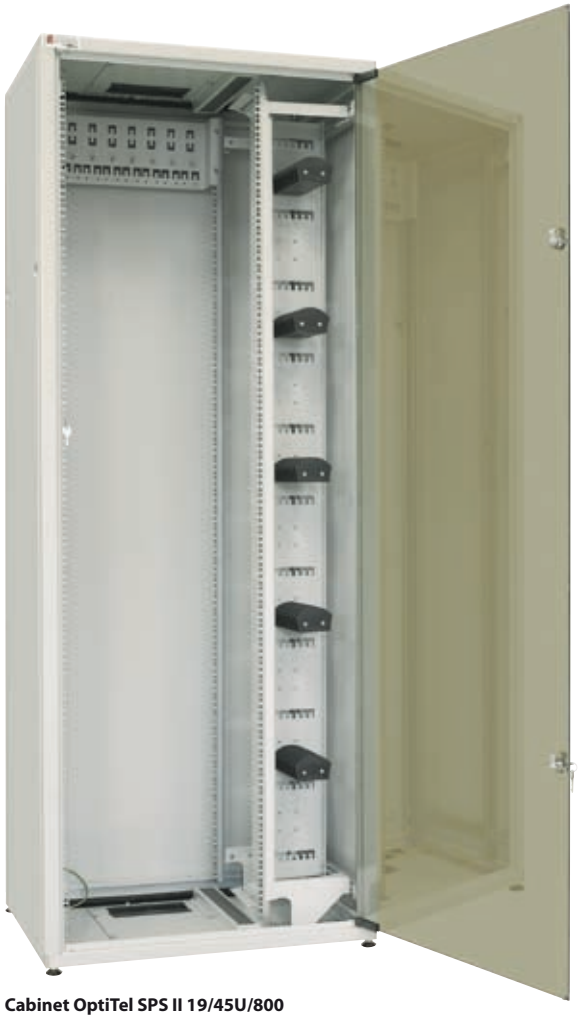

Cabinet OptiTel SPS II 19/45U/800 with standard equipment
- cat. no. WNK-405-123

TECHNICAL DATA:

Max. amount of outdoor cables . . 8
Useful height . . . . . 45 U
Dimensions (w. x h. x d.) . . . . . 800 x 2096 x 600 mm

Material:
- profile, supporting bars. . . . . steel 2.0 mm
- side panels, plinth, plinth's sides . . . . steel 1.0 mm
- door . . . . . safety glass 6 mm

Surface finish: powder painting RAL 7035

Protection degree: IP 20 in accodance with EN 60 529

Catalogue number:
Optitel SPS II cabinet with standard equipment 19/45U/800x600 **- cat. no. WNK-405-123**

SUPPLY INCLUDES:

- frame of the cabinet,
- front glas door,
- removable panels (side and rear),
- separated compartment for patch cords 200 mm width,
- 2 pairs of mounting profiles in 19" spacing,
- cable openings with a brush and foam strips in top and bottom plate of the frame,
- RTR-8 tube distributor,
- earthing strip and cables.

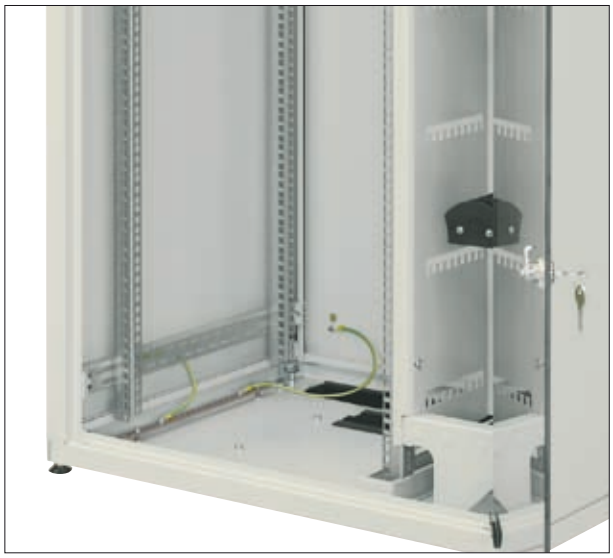

OPTITEL CABINET FOR FIBRE OPTIC PATCH PANELS SPS 19"

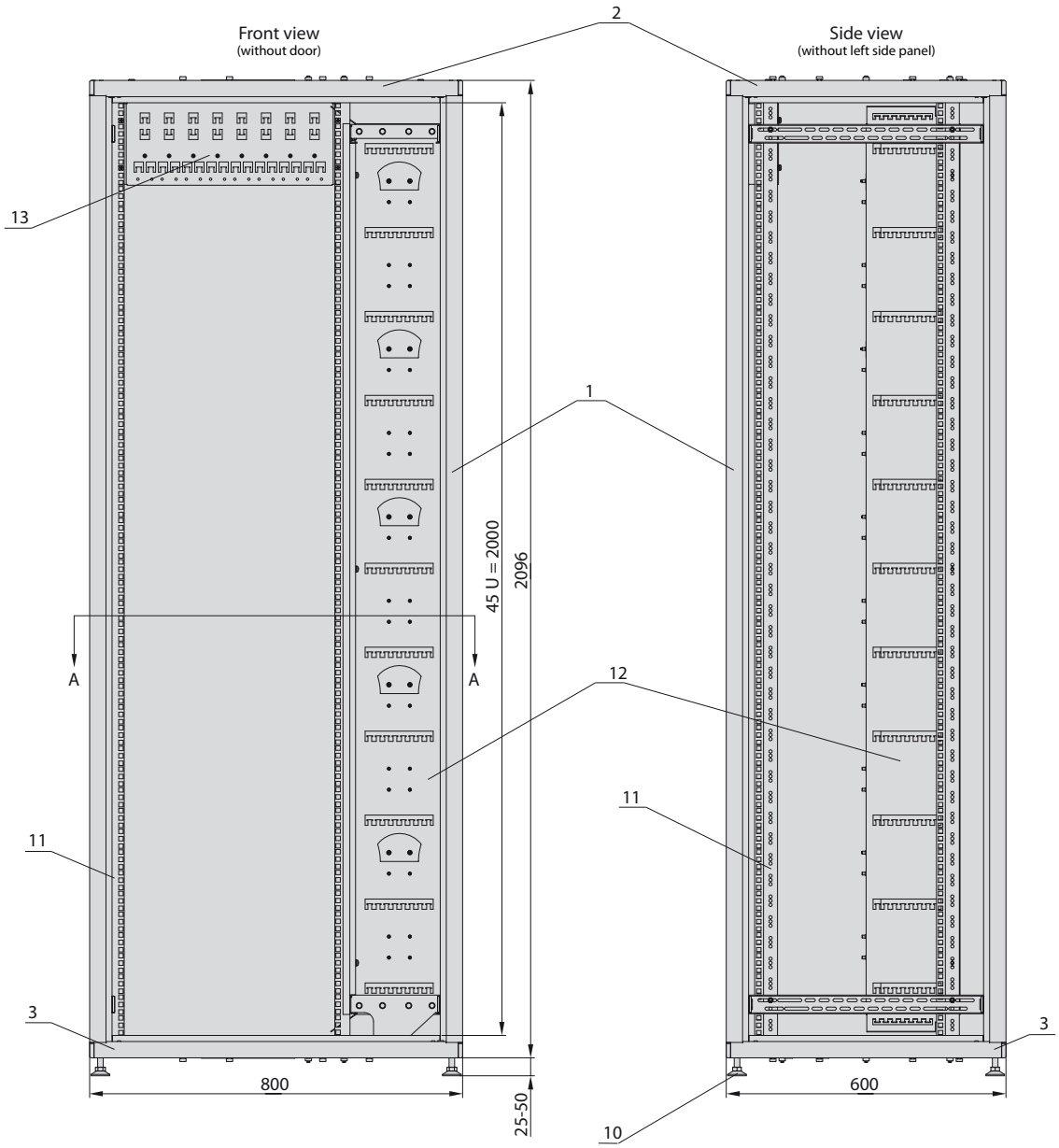

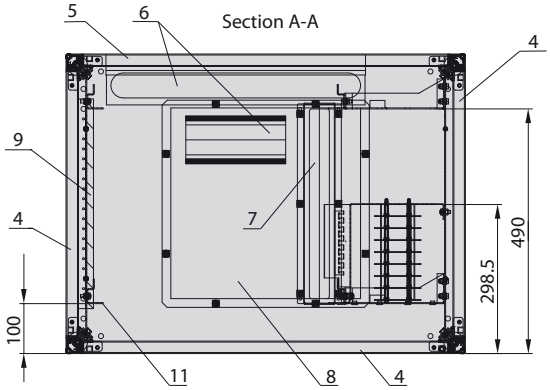

CONSTRUCTION

1. Frame's post
2. Frame's top plate
3. Frame's bottom plate
4. Side panel
5. Rear panel
6. Brush strip
7. Foam strip
8. Cable entry plate
9. Earthing bar
10. Adjustable feet
11. Mounting profile
12. Module of reserve
13. RTR-8 tube distributor

SPS 19" OPTITEL CABINET FOR FIBRE OPTIC PATCH PANELS

ADDITIONAL ACCESSORIES

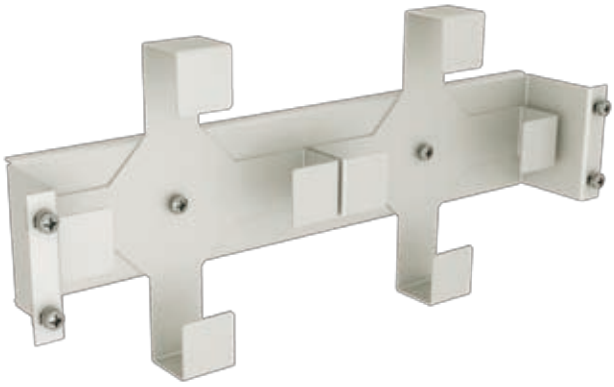

Cable storage module
- cat. no. WNK-878-016

OptiTel MZ - cable storage module

- Intended for storing reserve tubes of fibre optic cable.
- Standard version includes two cross frameworks; possibility to enlarge the set by four additional cross frameworks.
- Fitted to holes in side walls of mounting profiles; the supply includes assembly elements.

Catalogue number	Dimensions [mm]			Weight [kg]
	Width	Height	Depth	
WNK-878-016	465	215	73	2.05

Material: sheet steel 1.5 mm

Surface finish: powder painting in RAL 7035 colour

Additional cross framework for cable storage module
- cat. no. WNK-878-002

OptiTel KZK - cross framework for cable storage module

- Cross framework comprise additional equipment for cable storage module.
- Delivered with spacer for fitting on cable storage module.

Catalogue number	Dimensions [mm]			Weight [kg]
	Width	Height	Depth	
WNK-878-002	215	215	40	0.35

Material: sheet steel 1.5 mm

Surface finish: powder painting in RAL 7035 colour

OptiTel SZP cable storage drawer with front and rear cable entry
- 19" x 1 U x 200 mm - cat. no. WNK-874-421
- 19" x 1 U x 280 mm - cat. no. WNK-874-431

OptiTel SZP - cable storage drawers

- Intended for managing indoor cable reserve (patch cords and pigtails).
- Available in front and rear cable entry versions.
- Delivered with set of assembly hardware.

Catalogue number	Dimensions [mm]			Weight [kg]
	Width	Height	Depth	
WNK-874-421	483 (19")	44 (1U)	200	1.63
WNK-874-431			280	2.74

Material: sheet steel 1.5 mm

Surface finish: powder painting in RAL 7035 colour

OPTITEL FIBRE OPTIC PATCH PANELS PSP 19"

OptiTel PSP 19/1U/12

- Intended for 19" and 21" cabinets and racks.
- Number of adapter ports: 12
- Depth:
  - 200 mm - versions with half extending drawer
  - 280 mm - version with fully extending drawer
- Available front panels for all types of adapters (SC/E2000, ST or another, according to customer's request).
- Possibility of many cables terminating.
- Space inside allows for that the minimum bend radius is exceeded.
- Ergonomic storage for pigtails.
- Tube guiding units ensure the minimum bend radius exceeding
- Drawer makes installation easy and comfortable.
- Flowing regulation of depth of panel installation in cabinet
- Delivered with set of assembly hardware.
- Brackets for 21" standard, should be ordered separately.

Material: sheet steel 1.5 mm

Surface finish: powder painting in RAL 7035 colour

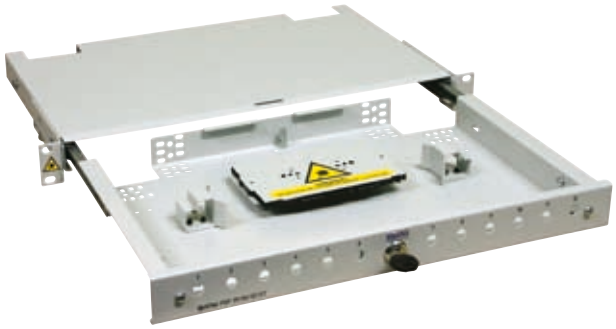

Optitel PSP G280 19/1 U/12 with fully extending drawer

Catalogue number	Dimensions [mm]			Type of adapters	Weight [kg]
	Width	Height	Depth		
WNK-875-103	483 (19")	44 (1U)	200	SC/E2000	3.8
WNK-875-403			280	SC/E2000	4.2

OptiTel PSP 19/1U/24

- Intended for 19" and 21" cabinets and racks.
- Number of adapter ports: 24
- Depth:
  - 200 mm - versions with half extending drawer
  - 280 mm - version with fully extending drawer
- Available front panels for all types of adapters (SC/E2000, ST, FC or another, according to customer's request).
- Possibility of many cables terminating.
- Space inside allows for that the minimum bend radius is exceeded.
- Ergonomic storage for pigtails.
- Tube guiding units ensure the minimum bend radius exceeding
- Sliding drawer makes installation easy and comfortable.
- Flowing regulation of depth of panel installation in cabinet
- Delivered with set of assembly hardware.
- Brackets for 21" standard, should be ordered separately.

Material: sheet steel 1.5 mm

Surface finish: powder painting in RAL 7035 colour

Optitel PSP G280 19/1 U/24 with fully extending drawer

Catalogue number	Dimensions [mm]			Type of adapters	Weight [kg]
	Width	Height	Depth		
WNK-875-102	483 (19")	44 (1U)	200	SC/E2000	3.8
WNK-875-402			280	SC/E2000	4.2
WNK-875-404				ST	
WNK-875-406				FC	

PSP 19" OPTITEL FIBRE OPTIC PATCH PANELS

OptiTel PSP G200 19/2 U/48 x SC/E2000

OptiTel PSP 19/2U/48

- Intended for 19" and 21" cabinets and racks.
- Number of adapter ports: 48
- Depth:
  - 200 mm - versions with half extending drawer
  - 280 mm - version with fully extending drawer
- Available front panels for all types of adapters (SC/E2000 or another, according to customer's request).
- Possibility of many cables terminating.
- Space inside allows for that the minimum bend radius is exceeded.
- Ergonomic storage for pigtails.
- Tube guiding units ensure the minimum bend radius exceeding
- Drawer makes installation easy and comfortable.
- Flowing regulation of depth of panel installation in cabinet
- Delivered with set of assembly hardware.
- Brackets for 21" standard, should be ordered separately.

Material: sheet steel 1.5 mm

Surface finish: powder painting in RAL 7035 colour

Catalogue number	Dimensions [mm]			Type of adapters	Weight [kg]
	Width	Height	Depth		
WNK-875-211	483 (19")	88 (2U)	200	SC/E2000	5.5
WNK-875-221			280	SC/E2000	6.0

OPTITEL WALL-MOUNTED FIBRE OPTIC DISTRIBUTION BOX PSN

- Mounted directly on the room's wall, where the line cable is terminated.
- Number of adapter ports: 24 or 48
- Available panel for all types of adapters (E2000, SC or another, according to customer's request).
- Possibility of many cables terminating.
- Equipped with 2 or 4 splice cassettes.
- Top and bottom cable entry.
- The rest of fibre loose tube storage in housing.
- Tube guiding units ensure that the minimum bend radius of pigtails is not exceeded.
- The case can be locked using lock, possibility of opening of the door upward and downward.
- It is possible to dismantle the housing for better access to splice cassettes.
- The distributor is equipped with delimitation lever so that the opened door can be used as montage table (when open downwards).

OptiTel PSN 4/48
equipped with pigtails and E2000 and SC adapters (ordered separately)

Material: sheet steel 1.5 mm
Surface finish: powder painting in RAL 7035 colour

REFERENCE CHART OF OPTITEL PSN DISTRIBUTION BOX

Type of distribution box OptiTel PSN									
Catalogue number	Dimensions [mm]			Type					Weight [kg]
	Width	Height	Depth	Type of adapters	Number of adapter ports	Max. number of cables	Number of splice cassettes	Pigtails' length [m]	
WNK-876-102	480	400	100	SC/E2000	24	4	2	2.5	7
WNK-876-101				SC/E2000	48		4		

SZK, STZK OPTITEL CABLE STORAGE BOXES AND FRAMES

Box with four arms frame (wall mounted) with lockable cover OptiTel SZK-1/4
- cat. no. WNK-879-004

Four arms frame (wall mounted) OptiTel STZK-2/4
- cat. no. WNK-879-001

- Makes possible organization of cable reserve.
- Ensure optimal bend radius.
- Intended for telecommunication networks.

Max. storage of cable: 50 - 100 m

Material: sheet steel 1.5 mm

Surface finish: powder painting in RAL 7035 colour

REFERENCE CHART FOR OPTITEL SZK, STZK CABLE STORAGE BOXES AND FRAMES

Catalogue number	Type	Description	Dimensions [mm]	Weight [kg]
WNK-879-004	OptiTel SZK-1/4	box with four arms frame (wall mounted) with lockable cover	600 x 600 x 178	15.5
WNK-879-001	OptiTel STZK-2/4	four arms frame (wall mounted)	565 x 565 x 126	2.0

OPTILAN FIBRE OPTIC PATCH PANELS PSP 19"

OptiLAN PSP III 19/1U/24

- Intended for mounting in 19" cabinets and racks.
- Number of adapter ports: 24
- Available front panels for all types of adapters (ST, SC/E2000, SC duplex,, or another according to customer's request).
- Possibility of fev cables terminating.
- The rest of fibre loose tube storage in housing.
- Tube guiding units ensure that the minimum bend radius is not exceeded.
- Dismountable front cover.
- Delivery with set of assembly hardware.

Material: sheet steel 1.5 mm

Surface finish: powder painting in RAL 7035 colour

Catalogue number	Dimensions [mm]			Type of adapters	Weight [kg]
	Width	Height	Depth		
WNK-878-410	483 (19")	44 (1U)	280	24 x ST	2.7
WNK-878-411	483 (19")	44 (1U)	280	24 x SC/E2000	2.7
WNK-878-412	483 (19")	44 (1U)	280	24 x SC duplex	2.7

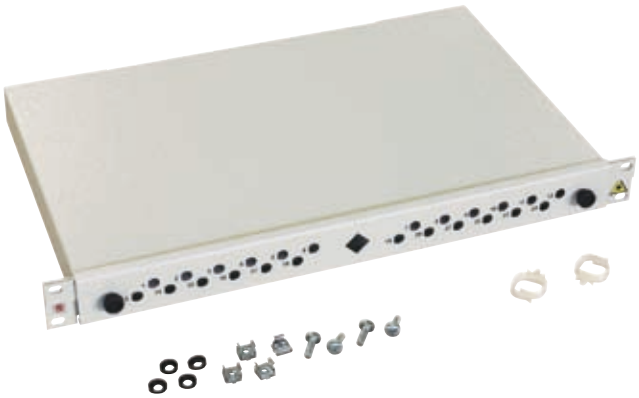

OptiLAN PSP III 19/1U/24xST
cat. no. WNK-878-410

OptiLAN PSP III 19/1U/24xSC/E2000
cat. no. WNK-878-411

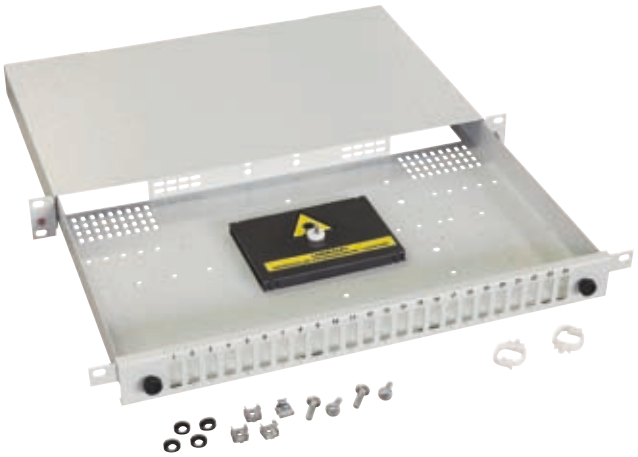

OptiLAN PSP III 19/1U/24xSC duplex
cat. no. WNK-878-412

SUPPLEMENTARY ACCESSORIES FOR OPTITEL AND OPTILAN

Splice cassette for 12 splices with 4 holders for cascade mounting of cassettes
- cat. no. WNK-877-050

Splice cassette

- Intended for mounting in OptiLAN PSP III, OptiLAN PSN, apllyed as well in OptiTel PSP, OpiTel PSN.
- Ergonomic design

Catalogue number	Dimensions [mm]			Weight [kg]
	Width	Height	Depth	
WNK-877-050	150	7	103	0.10
WNK-877-052	150	7	103	0.03
WNK-877-060	150	2	103	0.15

Cover for splice cassette
- cat. no. WNK-877-052

Splice cassette for 24 splices with cover
- cat. no. WNK-877-060

OPTILAN WALL-MOUNTED FIBRE OPTIC DISTRIBUTION BOXES PSN

- Mounted directly on the room's wall where the line cable is terminated.
- Number of adapter ports: 24
- Available adapter panels for all types of adapters (SC/E2000, ST or another according to customer's request).
- Possibility of fev cables terminating.
- Maximum number of splice cassettes: 2
- Possibility to enter the cable from top or bottom.
- Space inside of the distribution box allows for accommodating loose tube of fiber optic cable.
- Locked front door.

Material: sheet steel 1.5 mm

Surface finish: powder painting in RAL 7035 colour

OptiLAN PSN 4/24 wall-mounted fibre optic distribution box
- cat. no. WNK-877-301

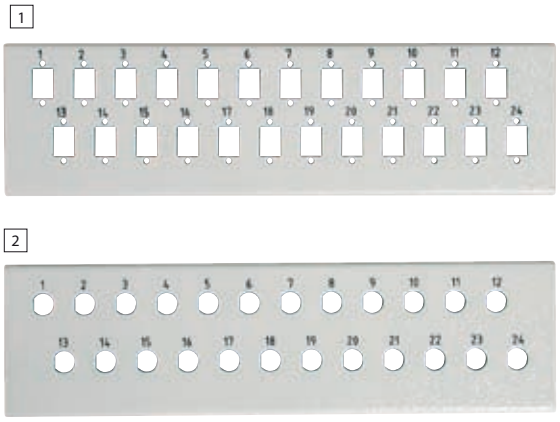

Adapter plates for OptiLAN PSN 4/24:
1) 24 x SC or E2000, 2) 24 x ST

OptiLAN PSN 4/24 distribution box
- equipped with adapters and pigtails (ordered separately)

REFERENCE CHART OF OPTILAN PSN BOXES

OptiLAN PSN distribution box									
Catalogue number	Dimensions [mm]			Type					We-ight [kg]
	Width	Height	Depth	Type of adapters	Number of adapter ports	Max. number of cables	Number of splice cassettes	Pigtails' length [m]	
WNK-877-301	344	285	80	SC/E2000	24	2	2	2.5	3.2
WNK-877-302				ST					

FIBRE OPTIC PIGTAILS, PATCH CORDS AND ADAPTERS

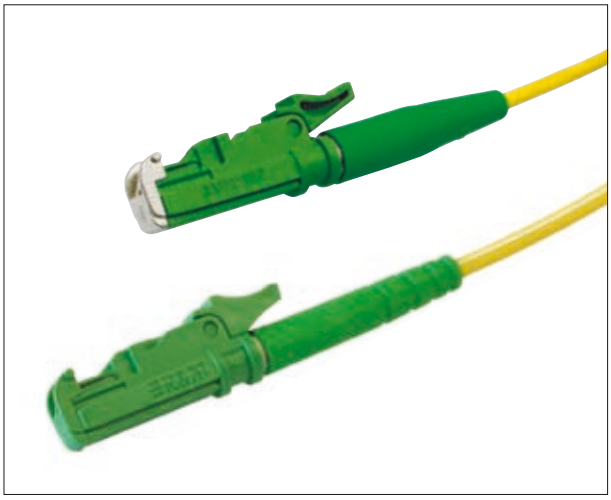

E2000 patch cords

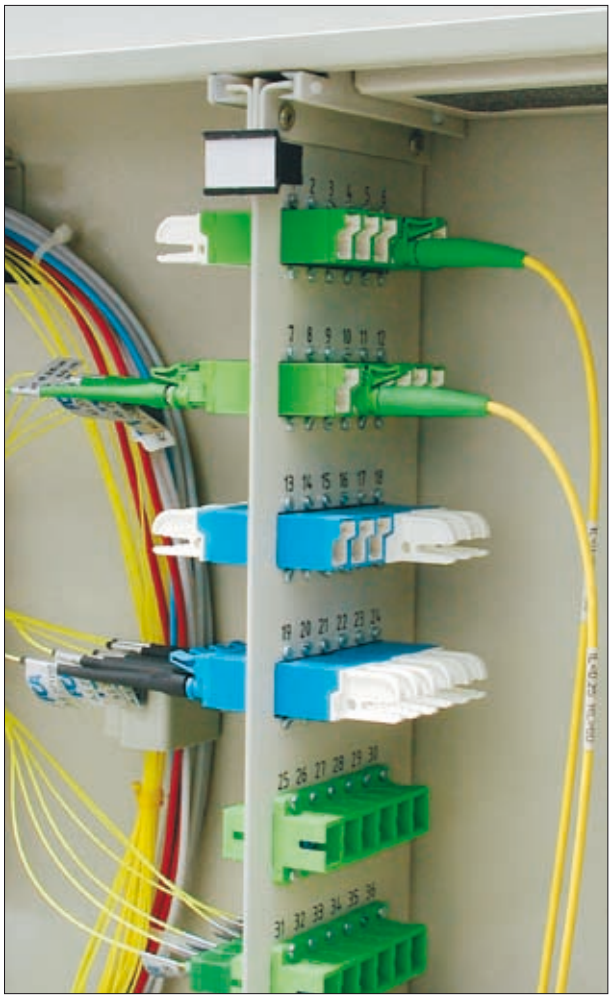

E2000 adapters mounted in OptiTel PSN distribution box
(adapters and pigtails should be ordered separately)

E2000 standard

- Connector with push - pull mechanism.
- Available in Premium version with typical insertion loss 0.09 dB.
- Standard connector in the transmission networks of the largest telecommunication operators.
- According to norm IEC 61 754-15, CECC 86275-801/802.

Connectors

- Remarkable eccentricity of the hole thanks to the precision

by production of the ferrule. Hole diameter tolerance from 0 to +1 µm (Premium version from 0 to +0,5 µm).

- Zirconium ferrule ensures very good resistance at the changing temperatures (operating temperature range from -40 °C to +85 °C).
- Assembly of the ferrule with an adhesive protects the fibres against impact strength.
- Machine polishing procedure ensures high quality of end face geometry and high repeatable performance.
- Each connector is adjustable, what ensures outstanding transmission parameter.
- End face geometry is controlled with an interferometer.

Adapters

- Manufactured from high quality plastic.
- The sleeve, manufactured from zirconium dioxide, ensures high precision of the connection and repeatable performance.

Connection type

The push - pull mechanism features:

- Protection cap prevents soiling and scratching of the ferrule end face.
- An integrated protective cap provides eye protection from laser radiation.
- A cap protects the ferrule against damages by mating cycles.
- The push - pull mechanism protects the connector against rotation.

Connector type

- Single mode and multimode connectors.
- Following cables can be equipped with this connector type: 900 um tube or PVC cables with the following diameters:
  1.7; 2.0; 2.4 and 2.8 mm.
- Possible polishing procedures: SuperPC, UltraPC and Angle PC.

Application

- Telecommunication, external and access networks.
- WDM networks.
- LAN/WAN networks.
- CATV networks.

FIBRE OPTIC PIGTAILS, PATCH CORDS AND ADAPTERS

CONNECTING PARAMETERS

Type	E2000/PC	E2000/APC	E2000/APC Premium
Type of fibre	single mode		
Ferula type	ceramic		
	Ø125 µm (0 to +1 µm)		Ø125 µm (0 to +0.5 µm)
Adjustable	yes		
Min. mating cycles	over 1000 cycles		
Operating temperature	-40 to +85 °C		

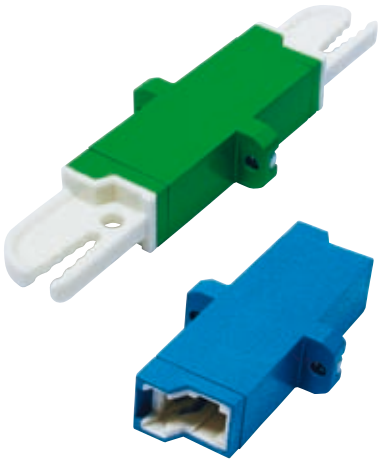

E2000 adapters

FERRULE END FACE GEOMETRY

Polishing procedures	Radius	Fibre height	Fibre roughness
PC	10 - 25 mm	± 50 nm	< 5 µm
APC	8 - 15 mm		

TRANSMISSION PARAMETERS

Type	E2000/PC		E2000/APC		E2000/APC Premium	
	typical	max.	typical	max.	typical	max.
Insertion loss IL	0.12 dB	0.35 dB	0.12 dB	0.35 dB	0.09 dB	0.15 dB
Return loss ORL	> 50 db	> 52 db	> 65 db	> 80 db	> 75 db	> 80 db

CATALOGUE NUMBERS OF FIBRE OPTIC PIGTAILS, PATCH CORDS AND ADAPTERS (for all standards of connectors)

Type	Catalogue number
Adapter SM	
E/2000/APC, simplex	T-SO-700-500
FC/APC, simplex	T-SO-700-501
LC/APC, duplex	T-SO-700-502
SC/APC, simplex	T-SO-700-503
SC/APC, duplex	T-SO-700-504
SC/PC, simplex	T-SO-700-505
SC/PC, duplex	T-SO-700-506
LC/PC, duplex	T-SO-700-507
ST/PC, simplex	T-SO-700-508
Adapter MM	
LC/PC, duplex	T-SO-700-600
SC/PC, simplex	T-SO-700-601
SC/PC, duplex	T-SO-700-602
ST/PC, simplex	T-SO-700-603

Type	Catalogue number
Pigtail SM 9/125	
E2000/APC, 2 m	T-SO-700-001
SC/APC, 2 m	T-SO-700-002
SC/PC, 2 m	T-SO-700-003
FC/PC, 2 m	T-SO-700-004
ST/PC, 2 m	T-SO-700-005
LC/PC, 2 m	T-SO-700-006
LC/APC, 2 m	T-SO-700-007
Pigtail MM 50/125 i 62,5/125	
SC, 2 m	T-SO-700-100
ST, 2 m	T-SO-700-101
LC, 2 m	T-SO-700-102
Patchcord SM 50/125 OM2 duplex	
ST-ST, 1 m	T-SO-700-400
ST-ST, 2 m	T-SO-700-401

Type	Catalogue number
SC/PC-SC/PC, 1 m	T-SO-700-402
SC/PC-SC/PC, 2 m	T-SO-700-403
SC/APC-SC/APC, 1 m	T-SO-700-404
SC/APC-SC/APC, 2 m	T-SO-700-405
LC-LC, 1 m	T-SO-700-406
LC-LC, 2 m	T-SO-700-407
E/2000/APC-E/2000/APC, 1 m	T-SO-700-408
E/2000/APC-E/2000/APC, 2 m	T-SO-700-409
Patchcord MM 50/125 OM2 duplex	
ST-ST, 1 m	T-SO-700-300
ST-ST, 2 m	T-SO-700-301
SC-SC, 1 m	T-SO-700-302
SC-SC, 2 m	T-SO-700-303
LC-LC, 1 m	T-SO-700-304
LC-LC, 2 m	T-SO-700-305

FIBRE OPTIC PIGTAILS, PATCH CORDS AND ADAPTERS

ST patch cords

ST adapters

ST standard

- Parts manufactured of high quality materials (metals and zirconium ceramics).
- Long term mechanical endurance.
- Stability of the transmission parameters.

Connectors
- Zirconium ferrule.
- Low insertion loss.
- Hole diameter tolerance from 0 to + 1 µm.
- Short boot ensures minimal bending radius.
- Machine polishing procedure ensures high quality of end facegeometry and high repeatable performance.

Adapters
- Slotted zirconium ceramic sleeve ensures precise connection.
- High durability.
- Guarantee of the repeatable performance.

Connection type
- Twist-lock bayonet coupling with anti-rotation key.

Application
- Telecommunication.
- LAN/WAN networks.

Available versions
- Single mode and multimode connectors.
- Following cables can be equipped with this connector type: 900 um tube or PVC cables with the following diameters: 1.7; 2.0; 2.4 and 2.8 mm.

CONNECTING PARAMETERS

Type	ST/PC	
Type of fibre	multimode	single mode
Ferula type	ceramic	
	Ø126 µm (0 to +1 µm)	Ø125 µm (0 to +1 µm)
Adjustable	none	
Min. mating cycles	over 1000 cycles	
Operating temperature	-40 to +85 °C	

TRANSMISSION PARAMETERS

Type	ST/PC multimode		ST/PC single mode	
	typical	max.	typical	max.
Insertion loss	0,2 dB	0,4 dB	0,2 dB	0,35 dB
Return loss	-	-	> 45 dB	> 50 dB

FIBRE OPTIC PIGTAILS, PATCH CORDS AND ADAPTERS

SC standard

- Connector with push - pull mechanism.
- Available in the miniature version.
- Available in duplex version.
- For applications in the telecommunication networks.
- Standard connector in the transmission networks of the largest telecommunication operators.
- According to norm JIS C5973, NNT, IEC, TIA, Bellcore.

Connectors

- Remarkable eccentricity of the hole thanks to the precision by production of the ferrule. Hole diameter tolerance from 0 to + 1 µm.
- Zirconium ferrule ensures very good resistance at the changing temperatures (operating temperature range from -40 °C to +85 °C).
- Assembly of the ferrule by using adhesive protects the fibres against impact strength.
- Machine polishing procedure ensures high quality of end face geometry and high repeatable performance.
- Each connector is adjustable; that ensures outstanding transmission parameter.
- End face geometry is controlled with an interferometer.

Adaptors

- Adapters have a zirconium sleeve for single-mode applications.
- Adapters have a zirconium sleeve for multi-mode applications.
- Adapter's sleeve is manufactured from zirconium dioxide, enabling high precision of the connection and high repeatable performance.

Connection type

- The Push - Pull mechanism protects the ferrule before twisting, which guarantees a full protection of the ferrule and connection stability.

Connector type

- Single mode and multimode connectors.
- Following cables can be equipped with this connector type: 900 um tube or PVC cables with the following diameters: 1.7; 2.0; 2.4 and 2.8 mm.
- Possible polishing procedures: SuperPC, UltraPC and AnglePC.

Application

- Telecommunication, external and access networks.
- WDM networks.
- LAN/WAN networks.
- CATV networks.

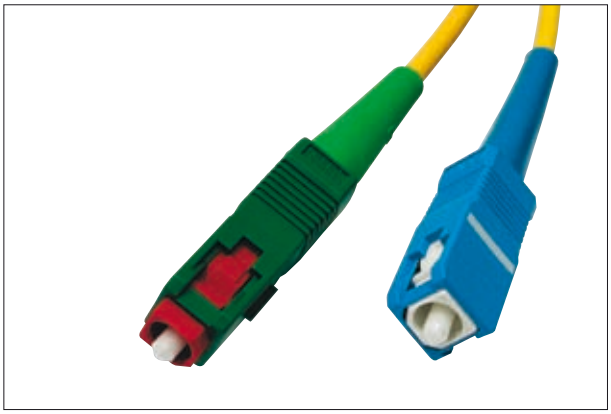

SC patch cords

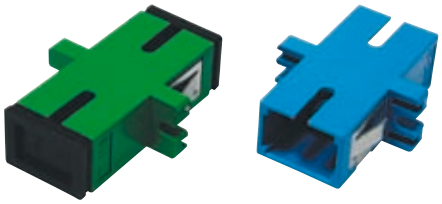

SC adapters

CONNECTING PARAMETERS

Type	SC/PC		SCAPC	SC/APC Premium
Type of fibre	multimode	single mode		
Ferula type	ceramic			
	Ø126 µm (0 to +1 µm)	Ø125 µm (0 to +1 µm)		Ø125 µm (0 to +0.5 µm)
Adjustable	yes			
Min. mating cycles	over 1000 cycles			
Operating temperature	-40 to +85 °C			

FERRULE END FACE GEOMETRY

Polishing procedures	Radius	Fibre height	Fibre roughness
PC	10 - 25 mm	± 50 nm	< 5 µm
APC	8 - 15 mm		

TRANSMISSION PARAMETERS

Type	SC/PC multimode		SC/PC		SC/APC		SC/APC Premium	
	typical	max.	typical	max.	typical	max.	typowa	maksymalna
Insertion loss IL	0.2 dB	0.35 dB	0.12 dB	0.35 dB	0.12 dB	0.35 dB	0.09 dB	0.15 dB
Return loss ORL	-	-	> 50 db	> 52 db	> 65 db	> 80 db	> 75 db	> 80 db

FIBRE OPTIC PIGTAILS, PATCH CORDS AND ADAPTERS

Patch cords with FC connectors

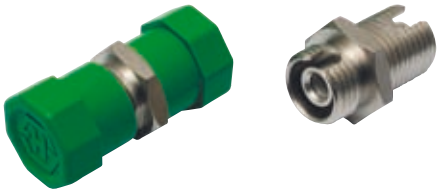

FC adapter

FC standard

- For applications in the largest telecommunication networks.
- Standard connector in the transmission networks of the largest telecommunication operators.
- According to norm JIS C5970, NNT, IEC, TIA, Bellcore.

Connectors

- Remarkable eccentricity of the hole thanks to the hole diameter tolerance from 0 to + 1 µm.
- Zirconium ferrule ensures very good resistance at the changing temperatures (operating temperature range from -40 °C to +85 °C).
- Assembly of the ferrule with an adhesive protects the fibres against impact strength.
- Machine polishing procedure ensures high quality of end face geometry and high repeatable performance.
- Each connector is adjustable, what ensures outstanding transmission parameter.
- End face geometry is controlled with an interferometer.

Adapters

- Sleeve of the adapter is manufactured from zirconium dioxide, enabling high precision of the connection.
- High durability.
- Available in SQF and D-shape version.

Connection type

- With anti-rotation key as protection of the ferrule end face against scratching or rotation by mating cycles.

Connector type

- Single mode and multimode connectors.
- Following cables can be equipped with this connector type: 900 um tube or PVC cables with the following diameters: 1.7; 2.0; 2.4 and 2.8 mm.
- Possible polishing procedures: SuperPC, UltraPC and AnglePC.

Application

- Telecommunication, external and access networks.
- WDM networks.
- LAN/WAN networks.
- CATV networks.

CONNECTING PARAMETERS

Type	FC/PC	FC/APC
Type of fibre	multimode	single mode
Ferula type	ceramic	
	Ø126 µm (0 to +1 µm)	Ø125 µm (0 to +0.5 µm)
Adjustable	yes	
Min. mating cycles	over 1000 cycles	
Operating temperature	-40 to +85 °C	

FERRULE END FACE GEOMETRY

Polishing procedures	Radius	Fibre height	Fibre roughness
PC	10 - 25 mm	± 50 nm	< 5 µm
APC	8 - 15 mm		

TRANSMISSION PARAMETERS

Type	FC/PC multimode		FC/PC single mode		FC/APC single mode	
	typical	max.	typical	max.	typical	max.
Insertion loss IL	0.12 dB	< 0.35 dB	0.12 dB	< 0.35 dB	> 65 dB	0.35 dB
Return loss ORL	-	-	> 50 db	> 52 db	> 0.12 db	> 80 db

FIBRE OPTIC PIGTAILS, PATCH CORDS AND ADAPTERS

LC standard

- Miniature connector with push-pull mechanism.
- Zirconia miniature ferrule 1.25 mm.
- PC polishing procedures.
- Standard connector type meets the demands of units, used in the telecommunication networks.
- Standard connector in the transmission networks and active components of the largest telecommunication operators.
- According to norm EIA/TIA 568A, FOCIS 10, IEC 11801, Bellcore.

Connector
- Twice smaller than SC or E2000 standard connector.
- Zirconia ferrule ensures very good resistance at the changing temperatures (operating temperature range from -40 °C to +85 °C).
- Machine polishing procedure ensures high quality of end face geometry and high repeatable performance.
- End face geometry is controlled with an interferometer.

Adapter
- Twice smaller than SC or E2000 standard adaptor.
- High packing density.

Connection type
- The Push - Pull coupling mechanism guarantees high protection and stability of the connection.

Connector type
- Single mode and multimode connectors.
- Simplex and duplex connectors.
- Following cables can be equipped with this connector type: 900 um tube or PVC cables with the following diameters: 1.6 and 2.0 mm.

Application
- Telecommunication, external and access networks.
- WDM networks.
- LAN/WAN networks, Fibre to the Desk - solution.
- CATV networks.

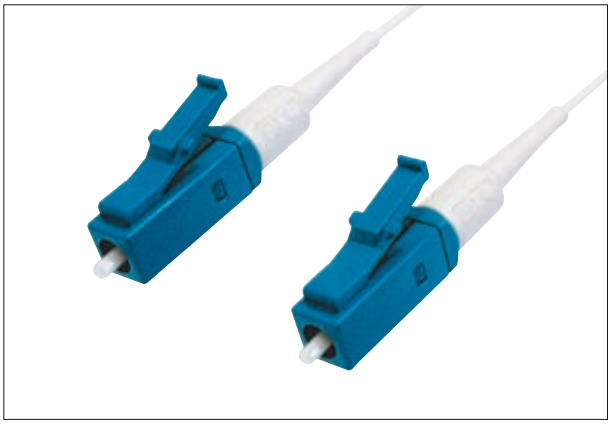

Pigtails with LC connectors

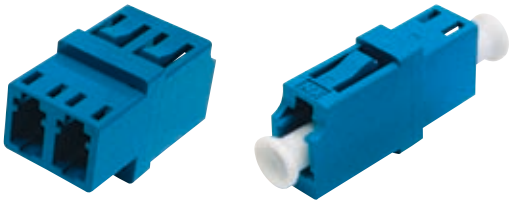

LC adapters

CONNECTING PARAMETERS

Type	LC/PC	
Type of fibre	multimode	single mode
Ferula type	ceramic	
	Ø126 µm (0 to +1 µm)	Ø125 µm (0 to +1 µm)
Adjustable	yes	
Min. mating cycles	ponad 1000 cycles	
Operating temperature	-40 to +85 °C	

TRANSMISSION PARAMETERS

Type	LC/PC multi mode		LC/PC single mode	
	typical	max.	typical	max.
Insertion loss IL	0.12 dB	0.35 dB	0.2 dB	0.4 dB
Return loss ORL	-	-	> 50 dB	> 55 dB

CABLE MANAGEMENT

CABLE MANAGEMENT

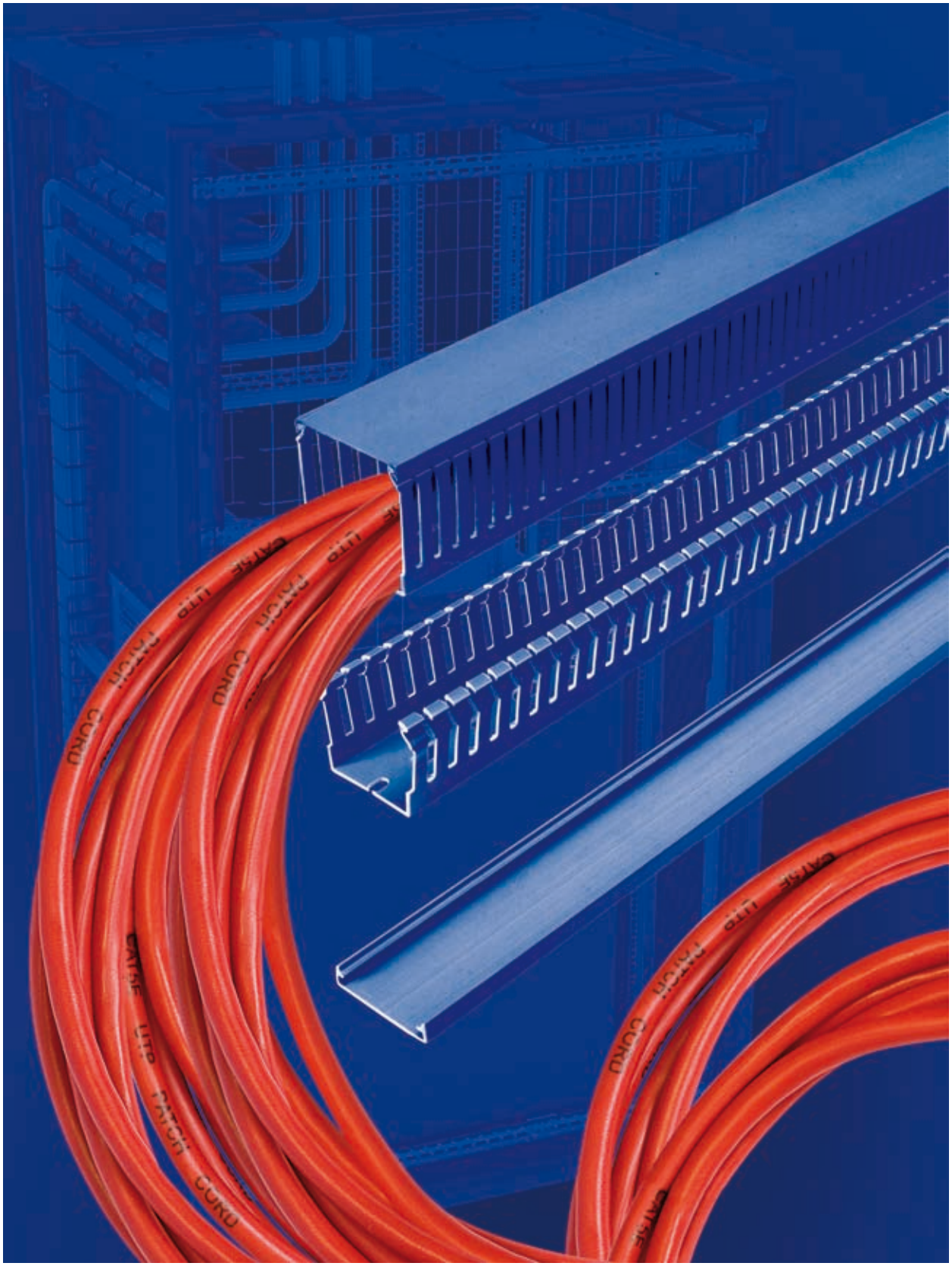

CABLE MANAGEMENT

Way of fastening cable clamps on cable management bar

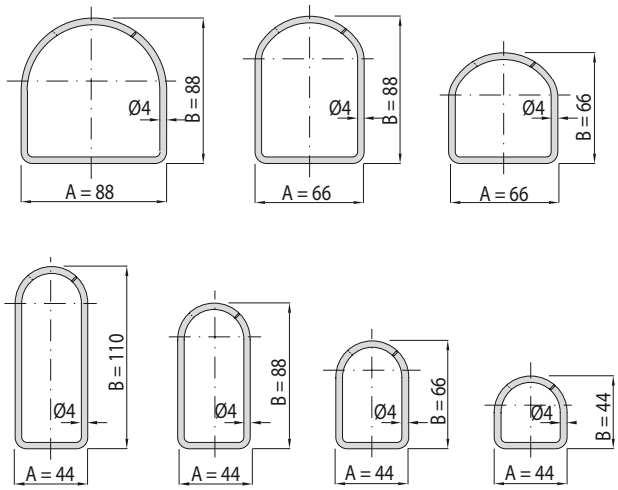

Mounting plate:

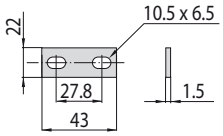

Cable clamps

Intended for fixing:
- on cable management bars (see picture below),
- on mounting profiles.

Material:
Zn coated steel

Scope of delivery:
The cable clamps are sold in sets: 5 pcs. of clamps and fixing accessories.

Note:
It is possible to order on demand cable clamps painted in black (RAL 9005).

Type of cable clamp	Package	Dimensions A x B [mm]	Catalogue number
	5 pcs.	88 x 88	WZ-SB52-00-01-000
		66 x 88	WZ-SB52-00-02-000
		66 x 66	WZ-SB52-00-03-000
		44 x 110	WZ-SB52-00-04-000
		44 x 88	WZ-SB52-00-05-000
		44 x 66	WZ-SB52-00-06-000
		44 x 44	WZ-SB52-00-07-000
	5 pcs.	88 x 88	WZ-SB53-00-01-000
		66 x 88	WZ-SB53-00-02-000
		66 x 66	WZ-SB53-00-03-000
		44 x 110	WZ-SB53-00-04-000
		44 x 88	WZ-SB53-00-05-000
		44 x 66	WZ-SB53-00-06-000
		44 x 44	WZ-SB53-00-07-000
	5 pcs.	88 x 88	WZ-SB54-00-01-000
		66 x 88	WZ-SB54-00-02-000
		66 x 66	WZ-SB54-00-03-000
		44 x 110	WZ-SB54-00-04-000
		44 x 88	WZ-SB54-00-05-000
		44 x 66	WZ-SB54-00-06-000
		44 x 44	WZ-SB54-00-07-000

Cable management bar

Cable management bar

19" assembly, height: 1 U.
With slots for mounting cable clamps.

Material:
Sheet steel powder painted in light grey (RAL 7035) or black (RAL 9005)

Scope of delivery:
Cable management bar, 8 rubber covers for not used slots, fixing accessories.

Note:
Cable clamps should be ordered separately.

Height [U = 44.45 mm]	Package	Colour	Catalogue number
1 U	1 pc.	RAL 7035	WZ-SB55-00-00-011
		RAL 9005	WZ-SB55-00-00-161

Cable organizers

- 19" standard
- Height 1 U
- Esthetical look.
- Convenient reconfiguration.
- WNK-811-000, WNK-811-100 and WNK-811-101 cable organizer sets include fixing accessories.

Material: sheet steel, plastic

Surface finish: powder painting

Dimensions [mm]			Colour	Catalogue number
Width	Height	Depth		
483	44	80	RAL 7035	WNK-811-000
483	44	70	RAL 7035	WNK- 811-100
483	44	70	RAL 9005	WNK- 811-101
483	44	82	RAL 9005	T-SO-900-001
483	44	82	RAL 9005	T-SO-900-005
483	44	62	RAL 9005	T-SO-900-004

Package: 1 pc.

WNK-811-000

WNK-811-100

WNK-811-101

T-SO-900-001

T-SO-900-005

T-SO-900-004

Cable holder

Fixed horizontally to the front and rear mounting profiles, parallel to the cabinet's side. For installing cable bundle. With holes for M6 bolts.

Material:
Zinc-coated sheet steel

Scope of delivery:
Cable holder with fixing accessories.

Length [mm]	Catalogue number
500	WZ-SB00-29-01-000
410	WZ-SB00-29-02-000
335	WZ-SB00-29-03-000
310	WZ-SB00-29-04-000
210	WZ-SB00-29-05-000

Package: 1 pc.

Cable holder

CABLE MANAGEMENT

Vertical cable management for cabinet with a height of 42 U, colour RAL 9005

Vertical cable management

Designed for vertical organization of cables inside the cabinets: SZB, OTS1, SZB SE, DC.
Only for cabinets 800 mm wide.
Fixed to horizontal C-profiles at the cabinet's side walls.
Equipped with a removable front cover.

Material:
Sheet steel powder painted.

Scope of delivery:
Vertical cable management with fixing accessories for assembling into the cabinet.

For cabinet height	Dimensions [mm]		Colour	Catalogue number
	Width	Depth		
47 U	100	111	RAL 7035	WZ-6186-22-01-011
			RAL 9005	WZ-6186-22-01-161
45 U	100	111	RAL 7035	WZ-6186-22-02-011
			RAL 9005	WZ-6186-22-02-161
42 U	100	111	RAL 7035	WZ-6186-22-03-011
			RAL 9005	WZ-6186-22-03-161

Package: 1 pc.

PVC cable ducts

Designed for vertical organization of cables inside the cabinets: SZB, OTS1, SZB SE, DC.
Fixed to horizontal C-profiles at the cabinet's side walls with help of the stiffening C-profile.
Cable duct and stiffening C-profile are ordered separately.

Material:
Cable duct - tworzywo PCV
Stiffening C-profile - sheet steel Al-Zn coated

Scope of delivery:
Cable ducts - sold in lengths of 2 m.
Stiffening C-profile - sold in lengths given in the table below; C-profile scope of delivery includes fixing accessories for cabinet installation.

PVC cable ducts

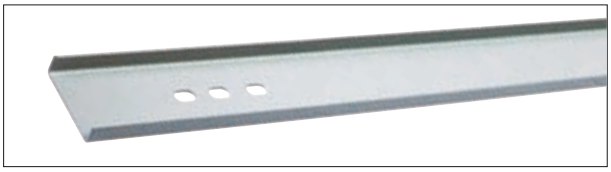

C-profile for stiffening PVC cable ducts

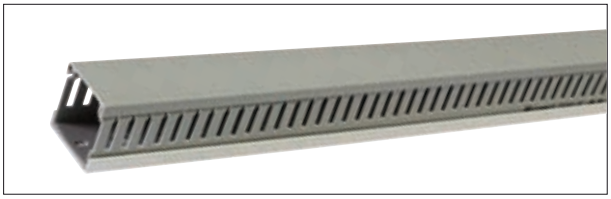

PVC cable duct fastened to the C-profile for cable duct stiffening

PVC cable duct with a C-profile for cable duct stiffening, installed in the SZB cabinet

C-PROFILE FOR STIFFENING PVC CABLE DUCTS

Height [U = 44.45 mm]	For PVC ducts width [mm]	Catalogue number
47 U	60	WZ-SB00-31-25-000
	40	WZ-SB00-31-31-000
45 U	60	WZ-SB00-31-01-000
	40	WZ-SB00-31-13-000
42 U	60	WZ-SB00-31-02-000
	40	WZ-SB00-31-14-000
40 U	60	WZ-SB00-31-03-000
	40	WZ-SB00-31-15-000
39 U	60	WZ-SB00-31-26-000
	40	WZ-SB00-31-32-000
38 U	60	WZ-SB00-31-04-000
	40	WZ-SB00-31-16-000
36 U	60	WZ-SB00-31-05-000
	40	WZ-SB00-31-17-000
33 U	60	WZ-SB00-31-27-000
	40	WZ-SB00-31-33-000
32 U	60	WZ-SB00-31-06-000
	40	WZ-SB00-31-18-000
30 U	60	WZ-SB00-31-28-000
	40	WZ-SB00-31-34-000
28 U	60	WZ-SB00-31-07-000
	40	WZ-SB00-31-19-000
27 U	60	WZ-SB00-31-29-000
	40	WZ-SB00-31-35-000
24 U	60	WZ-SB00-31-08-000
	40	WZ-SB00-31-20-000
21 U	60	WZ-SB00-31-30-000
	40	WZ-SB00-31-36-000
18 U	60	WZ-SB00-31-09-000
	40	WZ-SB00-31-21-000
15 U	60	WZ-SB00-31-10-000
	40	WZ-SB00-31-22-000

Package: 1 pc.

PVC CABLE DUCT

Height [mm]	Width [mm]	Depth [mm]	Catalogue number
2000	60	100	M10-02-013
		80	M10-02-031
	40	60	M10-02-012
		40	M10-02-011

Package: 1 pc.

CABLE MANAGEMENT

Perforated cable tray

Designed for vertical organization of cables inside the cabinet.
Fixed to horizontal C-profiles at the cabinet's side walls.
Width: 150 mm

Material:
Sheet steel zinc coated

Scope of delivery:
Cable tray with fixing accessories.

Cable tray lenght [mm]	For cabinet height [U = 44.45 mm]	Catalogue number
2000	45 - 47 U	WZ-4755-20-01-000
1800	40 - 42 U	WZ-4755-20-02-000
1700	38 - 39 U	WZ-4755-20-03-000
1600	36 U	WZ-4755-20-04-000
1400	32 - 33 U	WZ-4755-20-05-000
1300	30 U	WZ-4755-20-06-000
1200	27 - 28 U	WZ-4755-20-07-000
1100	24 U	WZ-4755-20-08-000

Package: 1 pc.

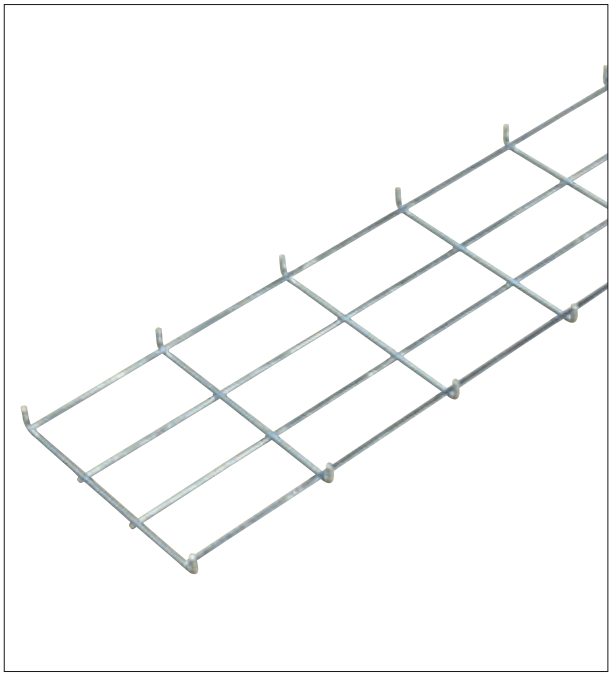

Wire cable tray

Designed for vertical organization of cables inside the cabinet.
Fixed to horizontal C-profiles at the cabinet's side walls.
Width: 150 mm

Material:
Galvanized steel

Scope of delivery:
Cable tray with fixing accessories.

Cable tray lenght [mm]	For cabinet height [U = 44.45 mm]	Catalogue number
2000	45 - 47 U	WZ-4755-25-01-000
1800	40 - 42 U	WZ-4755-25-02-000
1700	38 - 39 U	WZ-4755-25-03-000
1600	36 U	WZ-4755-25-04-000
1400	32 - 33 U	WZ-4755-25-05-000
1300	30 U	WZ-4755-25-06-000
1200	27 - 28 U	WZ-4755-25-07-000
1100	24 U	WZ-4755-25-08-000

Package: 1 pc.

Cable channel systems

Cable channel systems offered by ZPAS are complex solution for copper cabling, optic cabling and supply cable. Modular design systems with a large number of available components provide ease and speed of installation of complex waveforms of cable routes.

OFFERED SYSTEMS

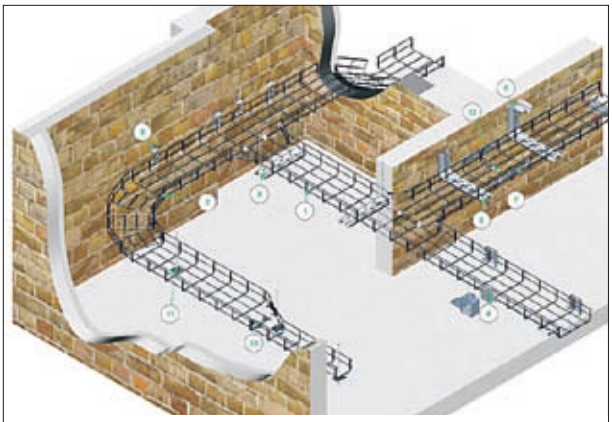

Mesh trays

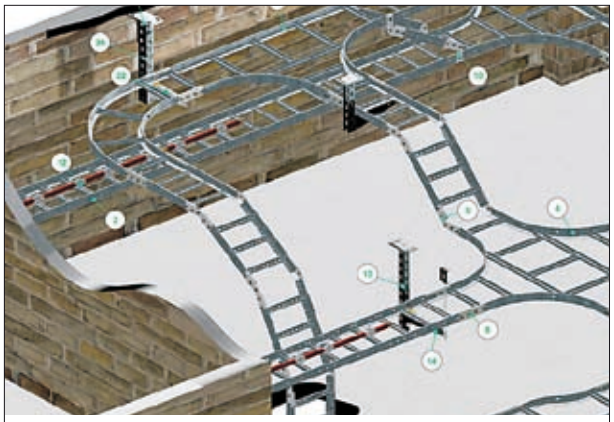

Cable ladders

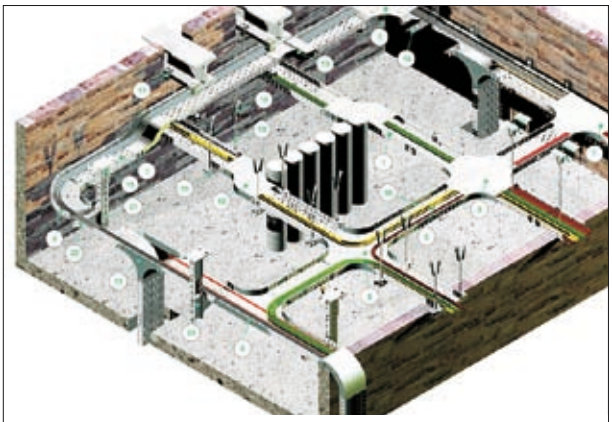

Cable trays

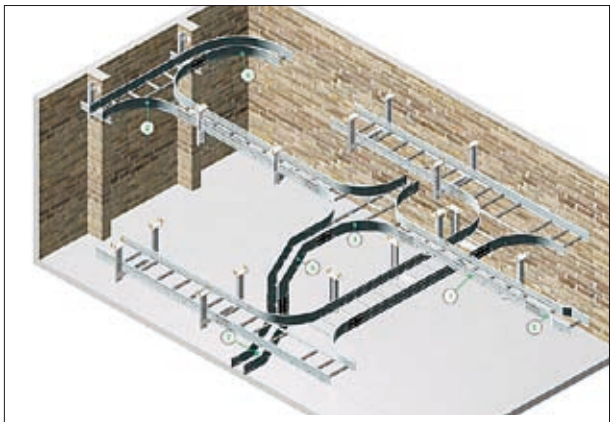

Cable ladders - self-suppoting system

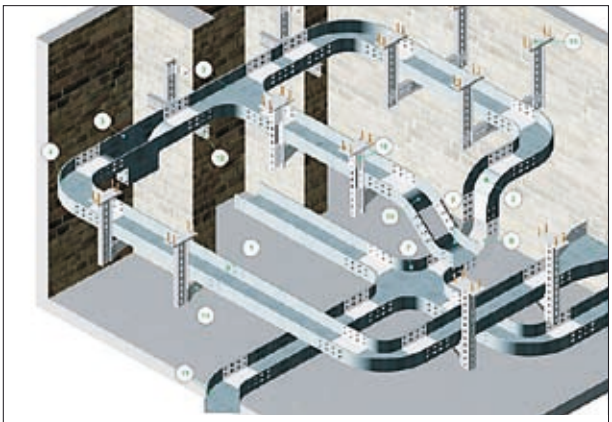

Cable trays - heavy external system

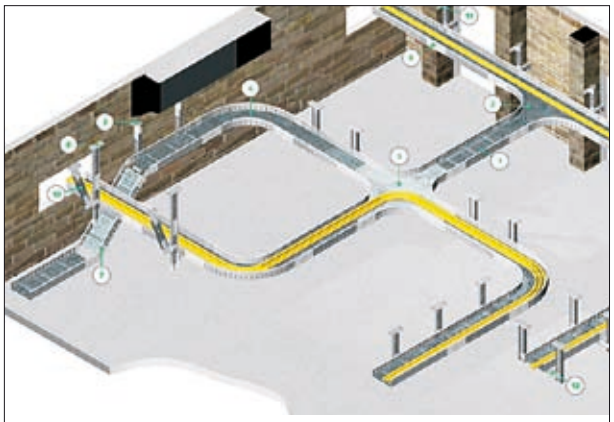

Cable trays - self-suppoting system

SOHO 10" CABLING SYSTEM

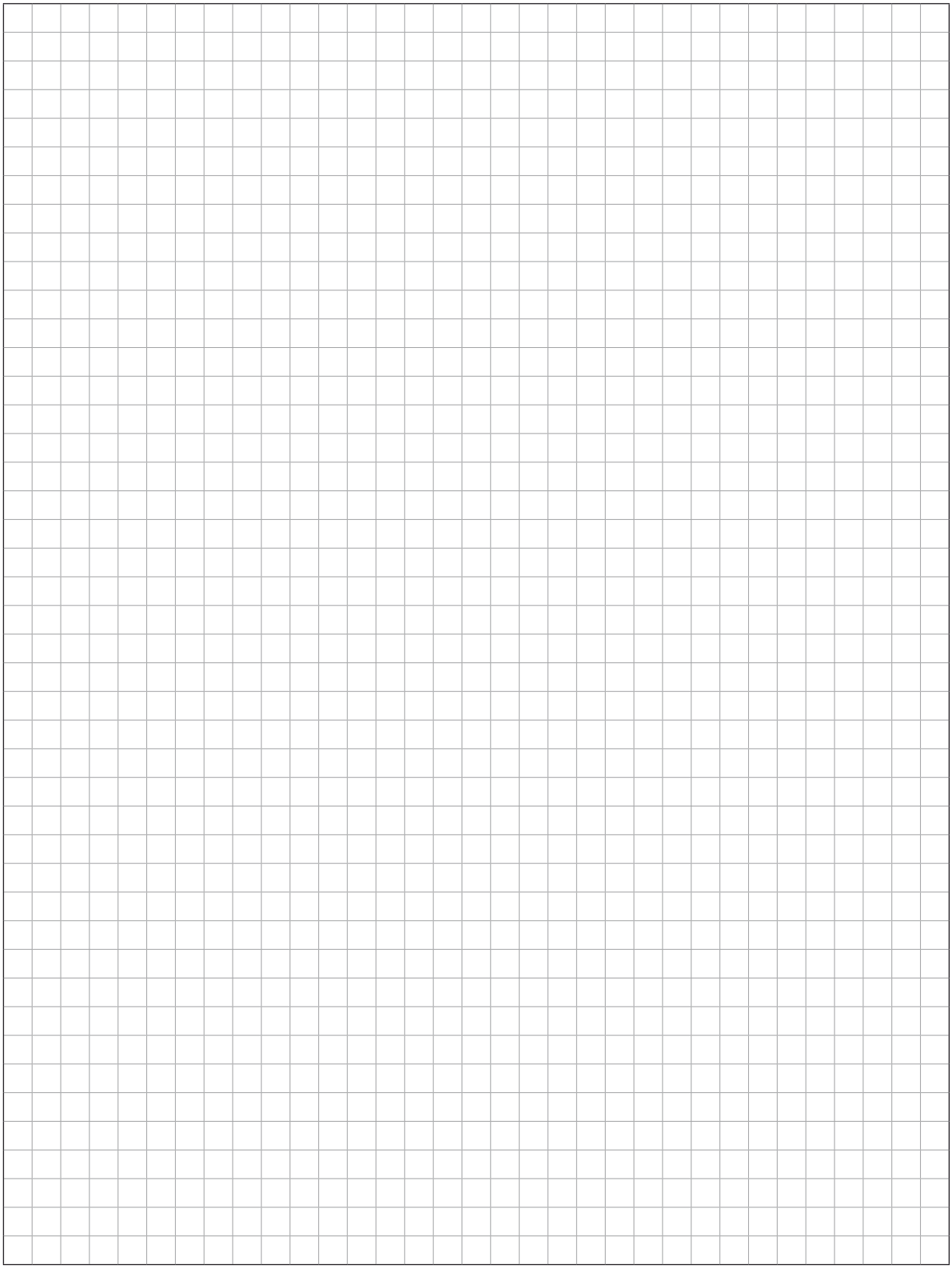

SOHO 10" CABLING SYSTEM

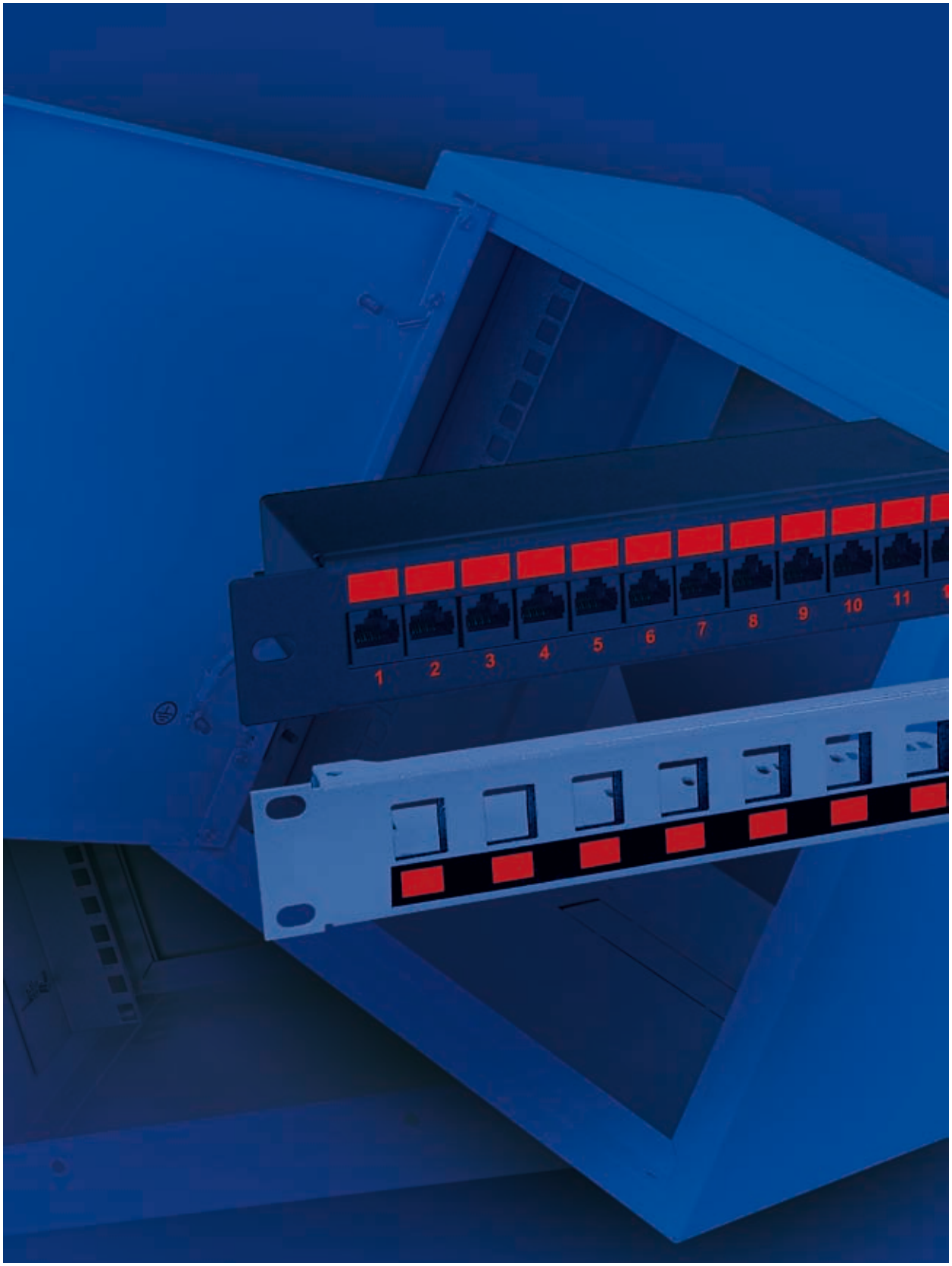

SOHO 10" CABLING SYSTEM

SKI2 10" WALL-MOUNTED NETWORK CABINET

WALL-MOUNTED CABINET FOR SMALL NETWORKS

- Designed for indoor applications.
- Usable height of the cabinet is 7 U.
- The cabinet is based on body with steel or glass door. The cabinet includes two mounting angles for installation of 10" appliances. The mounting angles are fixed to the walls of the body.
- Openings in the cabinet's top and bottom plate are covered with knock-out blanking plates.
- Following removal of the knock-out plate, a brush strip supplied together with the cabinet can be placed in one of the cable openings. The other brush strip can be ordered as a supplementary accessory (see page 98).
- The cabinet does not have a rear panel.

TECHNICAL DATA

Material:
Sheet steel, safety glass

Surface finishing:
Powder painted in RAL 7035.
Application of other colours on request.

Front view

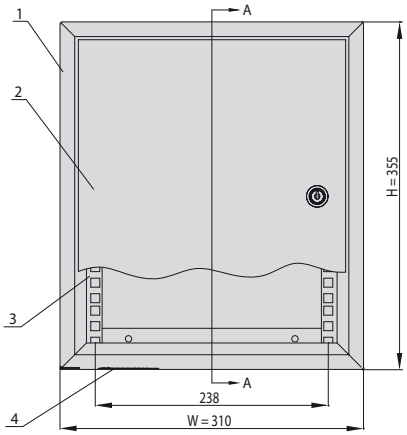

A-A section

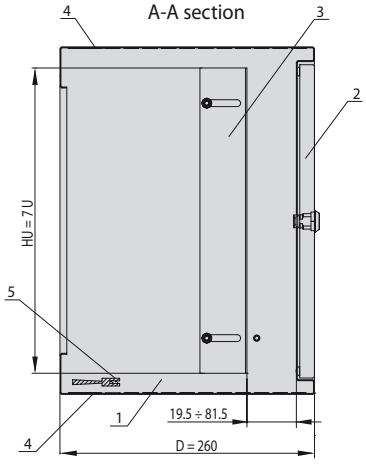

Top view

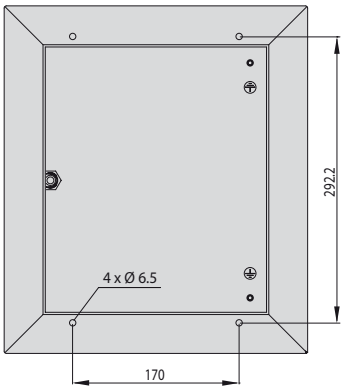

DESIGN

1. Body
2. Door
3. Mounting angle
4. Knock-out blanking plate
5. Brush strip

Rear view

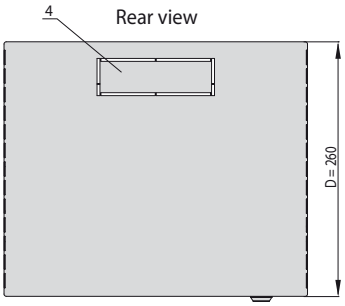

REFERENCE CHART

Total width W [mm]	Total depth D [mm]	Total height H [mm]	Usable height HU [U = 44.45 mm]	Catalogue number	
				Cabinet with steel door	Cabinet with glass door
310	260	355	7 U	WZ-3661-01-01-011	WZ-3661-01-02-011

ACCESSORIES IN THE 10" STANDARD

LZ-161

Power strip 10" x 1 U, 4 UTE sockets (French type), voltage rating 230 V AC, maximum current 10 A, cable 3,0 m with Unischuko plug, body made of anodized aluminium, 2 mounting brackets
- cat. no. WZ-LZ16-10-00-000

LZ-162

Power strip 10" x 1 U, 2 UTE sockets (French type), 2 IEC 60320 C13 sockets, voltage rating 230 V AC, maximum current 10 A, cable 3,0 m with Unischuko plug, body made of anodized aluminium, 2 mounting brackets
- cat. no. WZ-LZ16-20-00-000

LZ-163

Power strip 10" x 1 U, 3 UTE sockets (French type), Illuminated switch, voltage rating 230 V AC, maximum current 10 A, cable 3,0 m with Unischuko plug, body made of anodized aluminium, 2 mounting brackets
- cat. no. WZ-LZ16-30-00-000

Power strip 10" x 1 U, 4 UTE sockets (French type), voltage rating 230 V AC, maximum current 10 A, cable 1,8 m with Unischuko plug, body made of anodized aluminium, 2 mounting brackets
- cat. no. T-SO-891-317

Universal patch panel 10" x 1 U, 4 ports 25 x 50 mm
- cat. no. WNK-891-319

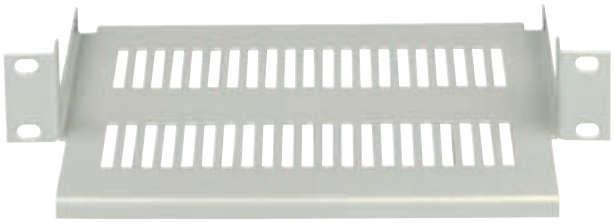

Shelf 10" x 1 U
- cat. no. WNK-891-311

Terminal block panel 10" x 1 U ,10 pairs
- cat. no. WNK-891-315

Patch panel UTP 10" x 1 U, cat. 6, 12 ports RJ45
- cat. no. T-SO-900-128

Patch panel UTP 10" x 1 U, cat. 5e, 8 ports RJ45
- cat. no. WNK-891-316

Patch panel 10" x 1 U, for keystones, 8 ports
- cat. no. WNK-891-312

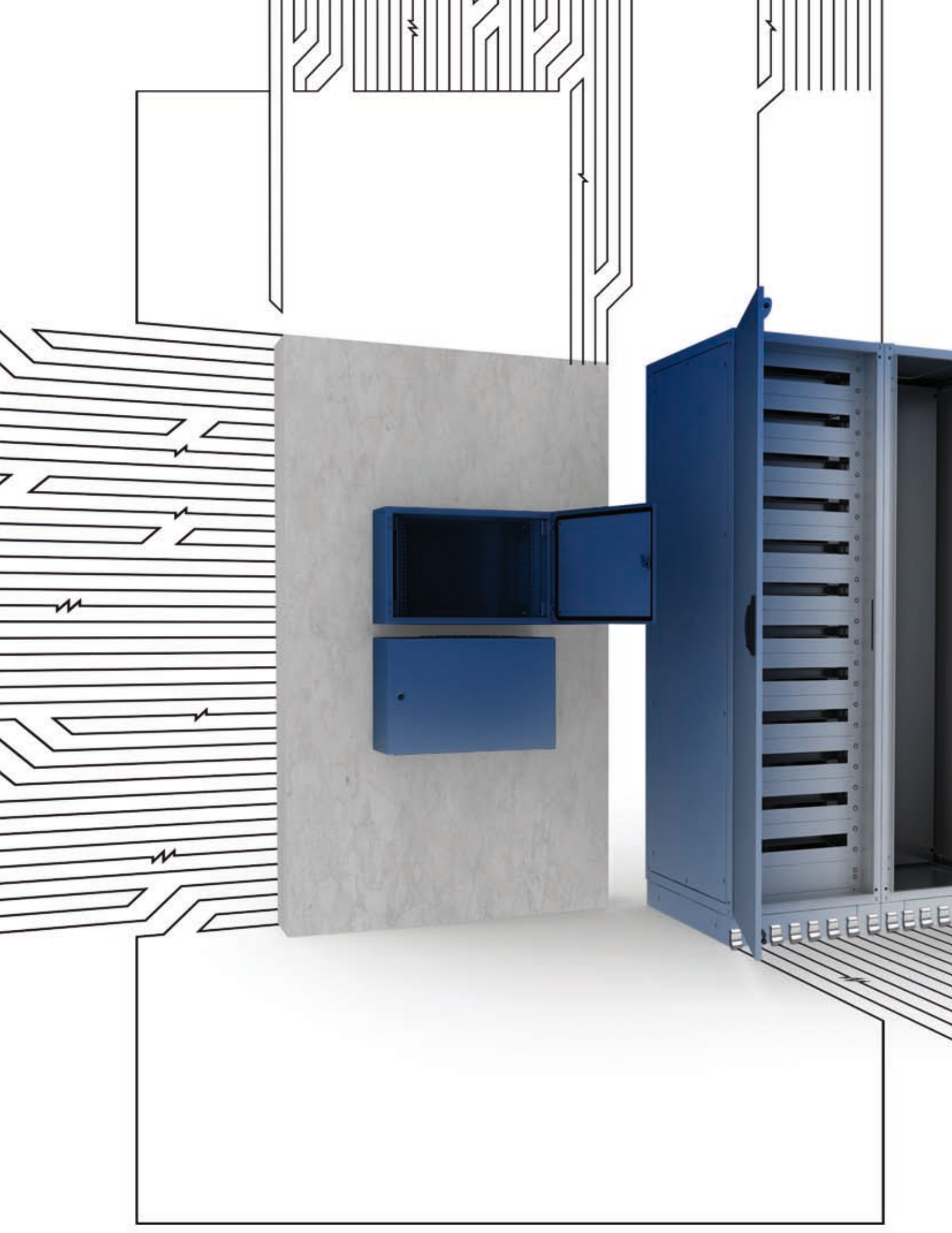

INDUSTRIAL ENCLOSURES

SZE2 floor-standing cabinets 273-284
Technical data 274
Design 276
Sample customised cabinets 282
Accessories for SZE2 cabinets 285-317
Doors 286
Roof and side panels 288
Cabinet's base 291
Mounting plate 293
19" swing frame 294
Accessories for mounting electrical equipment 295
19" mounting profiles system 296
Mounting bars system 298
Cable management 302
Earthing and potential equalisation 304
Lighting 306
Cable gland plates and blanking plates 308
Baying cabinets in rows 310
Ventilating, cooling and heating 311
Modular system 314
SZE2 floor-standing cabinets 319-338
Technical data 320
Design 322
Supplementary accessories 326
Doors 326
Side panels 328
Lifting accessories 328
Cabinet's base 329
Mounting plate 331
19" swing frame 333
Mounting bars system 334
Baying cabinets in rows 336
Earthing and potential equalisation 338
SWN wall-mounted cabinets 339-345
Technical data 340
Design 342
Supplementary accessories 344

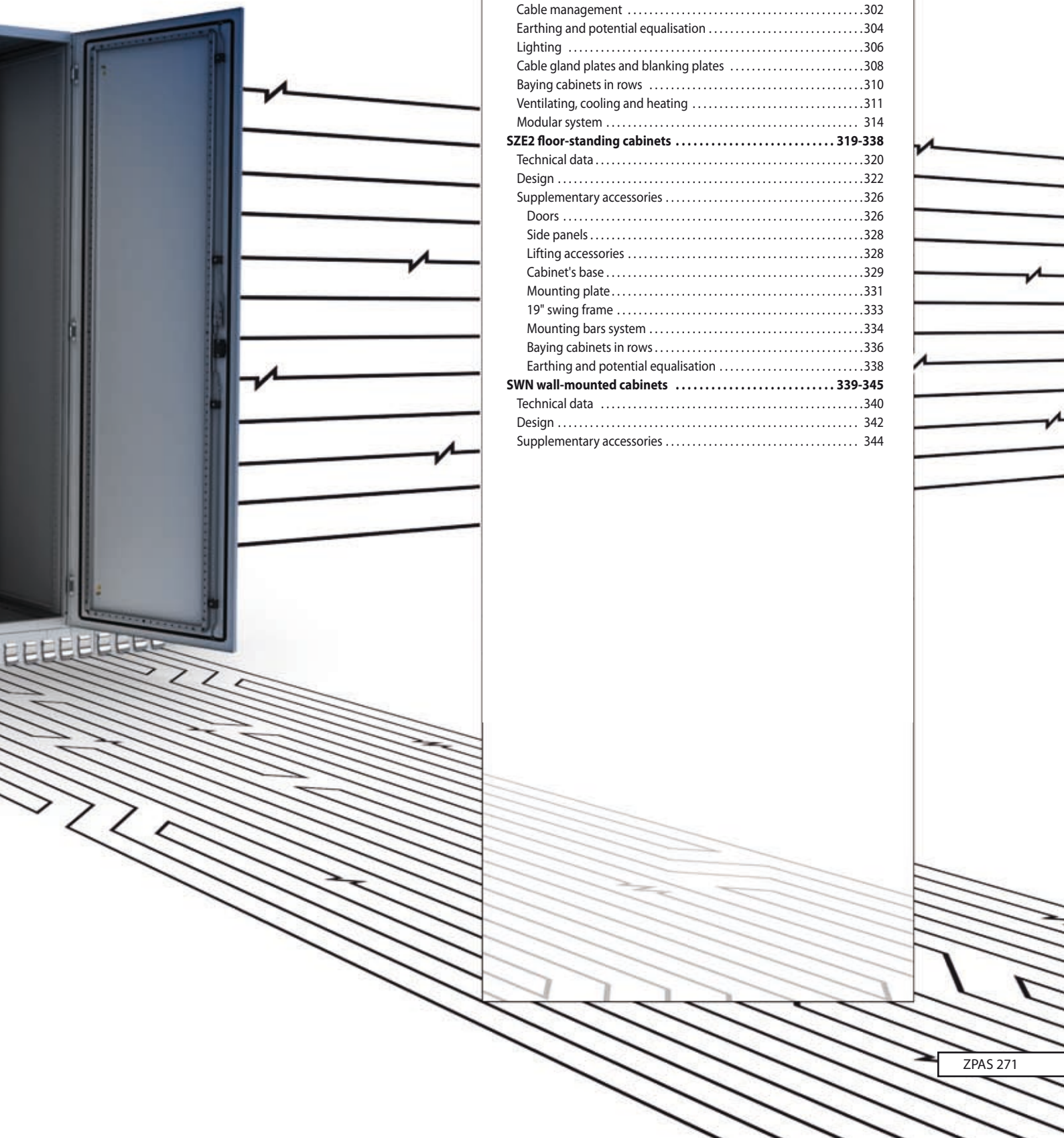

SZE2 CABINETS

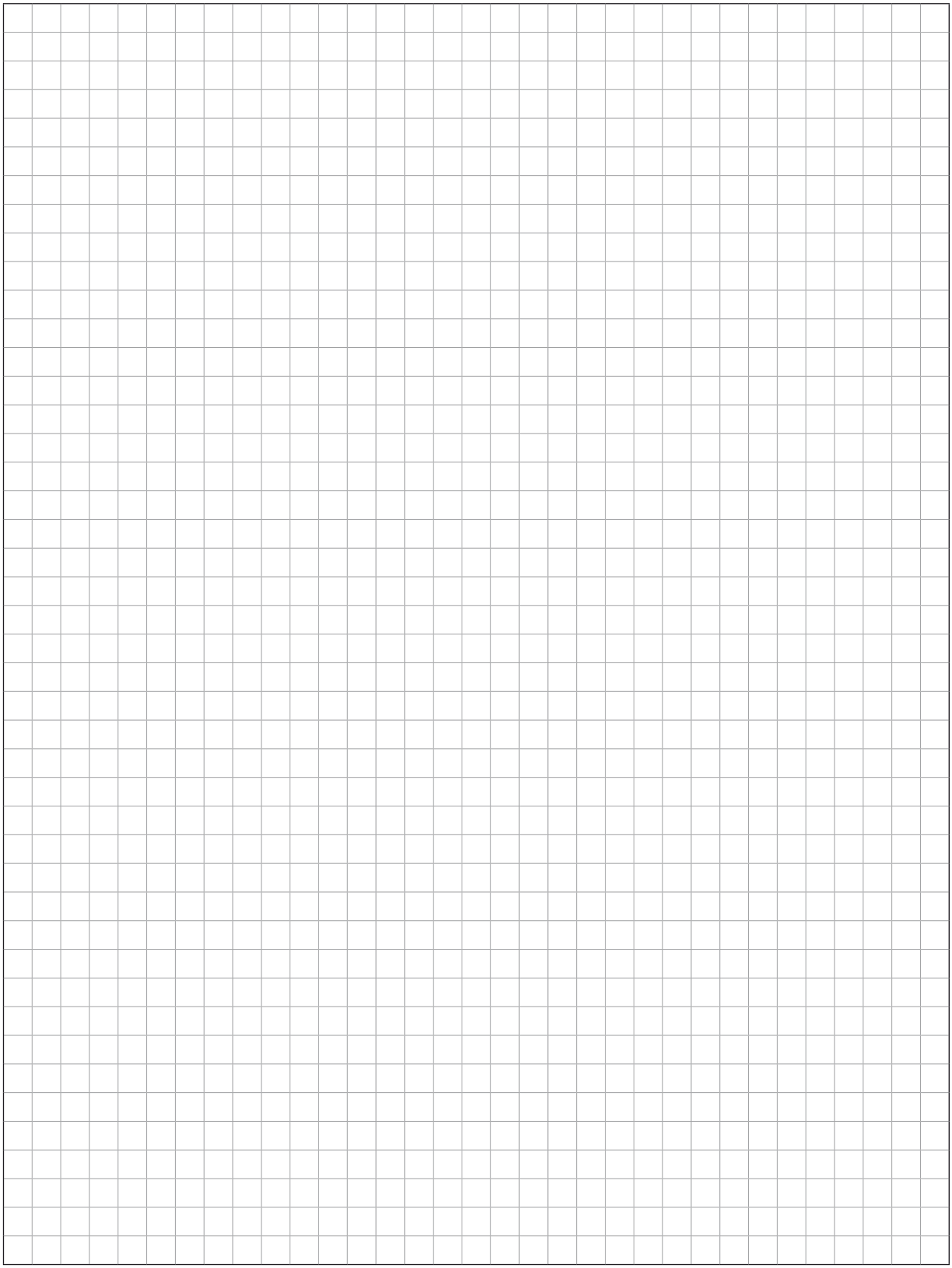

SZE2 CABINETS

SZE2 MODULAR CABINETS

Cabinet 600 mm wide including mounting plate, without side panels

Cabinet 800 mm wide including 19" swing frame

Cabinet 800 mm wide including 19" mounting profiles and plinth, without side panels

- Universal industrial cabinets designed for both outdoor and indoor applications.
- Design of the cabinet allows easy baying in rows.
- Manufactured in 19 standard dimensions according to the chart below.
- Cabinets of non-standard dimensions or in stainless steel version can be manufactured on individual customer's request.

CHART OF STANDARD CABINET DIMENSIONS

	Total width of the cabinet [mm]		Total depth of the cabinet [mm]	Height of the cabinet without plinth [mm]	
	with flushed side panels	with external side panels		1800	2000
				Catalogue numbers of cabinets	
Cabinets with single-wing door	600	650	400	-	WZ-1951-01-50-011
			500	WZ-1951-01-24-011	WZ-1951-01-12-011
			600	WZ-1951-01-23-011	WZ-1951-01-11-011
			800	-	WZ-1951-01-10-011
	800	850	400	-	WZ-1951-01-49-011
			500	WZ-1951-01-21-011	WZ-1951-01-09-011
			600	WZ-1951-01-20-011	WZ-1951-01-08-011
			800	-	WZ-1951-01-07-011
Cabinets with double-wing door	1000	1050	500	-	WZ-1951-01-06-011
			600	-	WZ-1951-01-05-011
	1200	1250	500	WZ-1951-01-15-011	WZ-1951-01-03-011
			600	WZ-1951-01-14-011	WZ-1951-01-02-011
			800	-	WZ-1951-01-01-011

SCOPE OF DELIVERY

Cabinet in basic configuration (cat. no. WZ-1951-01-...-011) includes: cabinet's frame, front door with a lock that incl. double-bit insert (no handle), rear panel, mounting plate for the full height of the cabinet, blanking plates for cabinet's top plate, set of sliding gland plates for cabinet's bottom plate.
Note: side panels, plinth, roof, lifting eyes and other supplementary accessories should be ordered separately.

TECHNICAL DATA

Material:
Sheet steel

Protection degree:
IP 54 in accordance with EN 60529

Surface finishing:
Cabinet's frame, doors, panels, roof, plinth – powder painted in RAL 7035 (epoxide-polyester paint of coarse-grained structure, applied for internal conditions). On customer's request, it is possible to use special paint with increased resistance to adverse weather conditions and using polyzinc base.

Mounting plate - zinc coated

Mounting bars - Al-Zn coated

On request, the frame, door, side panels, roof and the plinth can be made of stainless steel.

Maximum load capacity:
1000 kg if equipment installed on the mounting plate,
1600 kg if equipment installed on a structure made of mounting bars fixed to the frame,
20 kg if equipment installed on doors,
150 kg if equipment installed on the swing frame.

MODULAR CABINETS SZE2

CABINET DESIGN

Welded framework of the cabinet
- Slotted side framework enables fixing a system of mounting rails or a mounting plate.
- The top plate of the frame is fitted with openings designed for cable entries or for mounting fan units. In the standard version, they are blinded with solid blanking plates.
- The bottom plate of the frame is fitted with one or two openings designed for cable entries. In the standard version, they are blinded with sliding gland plates.

Front door, rear panel
- Cabinets 1000 and 1200 mm wide are equipped with a double-wing door, while cabinets 800 and 600 mm wide are equipped with a single-wing door. A rear panel can be replaced with a rear door in all available widths of the cabinets.
- Easy change of door opening direction (by turning the door wing and the lock).
- Standard door is equipped with a 3-point lock and a stiffening slotted frame used for cable ducts, bundles of cables etc.
- Locking systems: factory-mounted lock with double-bit insert, option of replacement with a lock provided with a swing handle and cylinder insert.
- Possibility of manufacturing doors with a glass panel and perforation.
- Maximum door opening angle is 120°.

Two options of side panels
- Flushed panels - kept within cabinet dimensions.
- External panels - expanding the cabinet by 25 mm on each side; especially recommended for outdoor applications.

Roof
- As a part of supplementary accessories.
- Recommended for cabinets placed outside the buildings.

Lifting eyes
- Lifting eyes are available if requested. They are fixed to the threaded holes in the top of the frame.

Base
- The cabinet is normally placed on either 100 mm or 200 mm plinth.
- It is possible to set the cabinet directly on the cable duct, however this option needs to be discussed with our technical staff.

Sealing gasket
- Doors, panels and solid blanking plates used in the top are sealed with polyurethane foam.

Baying cabinets in rows
- Possibility to bay cabinets in rows.
- Bayed cabinets can be additionally equipped with a partition.

The cabinet with the roof and flushed side panels

The cabinet with the roof and external side panels

The cabinet with a roof, flushed side panels and lifting eyes

Lock with swing handle and cylinder insert

Lock with double-bit insert

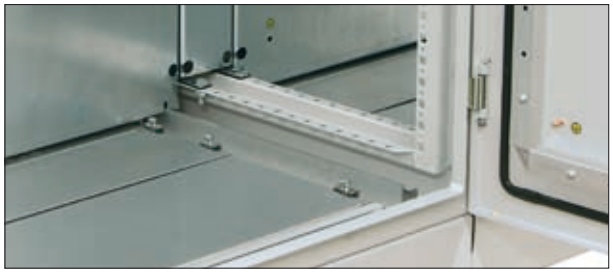

Baying cabinets in rows by using mounting plate infill

Fastening appliances in the cabinet
- Mounting plate - fits within the light of the cabinet, easy positioning by means of 2 sliding profiles on both sides; quick fastening using 4 bolts.
- Mounting rails - make it possible to build a required racking system within the cabinet (openings in the rails match the horizontal and vertical openings of the frame).
- 19" mounting profiles.
- 19" swing frame for cabinets 800 mm wide.

SZE2 MODULAR CABINETS

SZE2 cabinet 1200 mm wide, without side panels, intended for baying in rows

Side view
(comparison of flushed and external side panels)

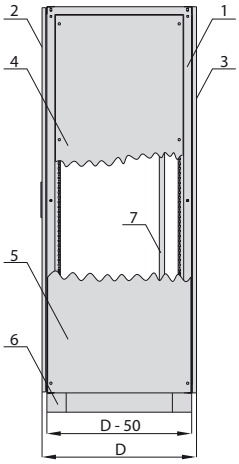

Front view
(cabinet with single-wing door)

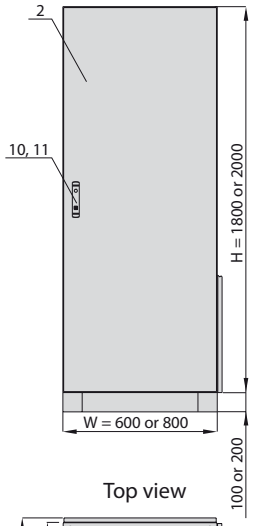

Top view

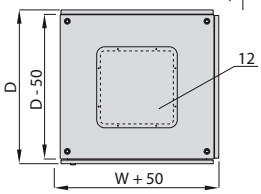

Notes:
Dimensions of bottom and top plates are specified on pages 280-281.
Detailed drawings of the cabinet are given on pages 278-279.

ORDERING INSTRUCTION

Placement of orders for SZE2 cabinet and supplementary accessories should be done by specifying **catalogue numbers from relevant charts**.

***) SZE2 cabinet - basic configuration:** cabinet's frame, front door with a lock that incl. double-bit insert (no handle), rear panel, mounting plate for the full height of the cabinet, blanking plates for cabinet's top plate, set of sliding gland plates for cabinet's bottom plate. **Note:** side panels, plinth, roof, lifting eyes and other supplementary accessories should be ordered separately.

****) Detailed list of supplementary accessories:**
pages 286-317.

REFERENCE CHART

Dimensions of cabinet's frame [mm]	**Height H**	1800					
	Width W	600		800		1200	
	Depth D	500	600	500	600	500	600
Door's type	**Number of wings**	1	1	1	1	2	2
Dimensions of mounting plate [mm]	**Height HP**	1730	1730	1730	1730	1730	1730
	Width WP	512	512	712	712	1112	1112

		Package	Catalogue numbers					
SZE2 cabinet*		1 pc.	WZ-1951-01-24-011	WZ-1951-01-23-011	WZ-1951-01-21-011	WZ-1951-01-20-011	WZ-1951-01-15-011	WZ-1951-01-14-011
Supplementary accessories**	**Flushed in side panels**	2 pc.	WZ-1951-09-06-011	WZ-1951-09-05-011	WZ-1951-09-06-011	WZ-1951-09-05-011	WZ-1951-09-06-011	WZ-1951-09-05-011
	External side panels	2 pc.	WZ-1951-07-14-011	WZ-1951-07-13-011	WZ-1951-07-14-011	WZ-1951-07-13-011	WZ-1951-07-14-011	WZ-1951-07-13-011
	Roof for cabinet with flushed side panels	1 pc.	WZ-1951-27-13-011	WZ-1951-27-12-011	WZ-1951-27-09-011	WZ-1951-27-08-011	WZ-1951-27-03-011	WZ-1951-27-02-011
	Roof for cabinet with external side panels	1 pc.	WZ-1951-28-13-011	WZ-1951-28-12-011	WZ-1951-28-09-011	WZ-1951-28-08-011	WZ-1951-28-03-011	WZ-1951-28-02-011
	100 mm modular plinth	1 pc.	WZ-001C-60-45-011	WZ-001C-60-55-011	WZ-001C-80-45-011	WZ-001C-80-55-011	WZ-001C-12-45-011	WZ-001C-12-55-011
	200 mm modular plinth	1 pc.	WZ-002C-60-45-011	WZ-002C-60-55-011	WZ-002C-80-45-011	WZ-002C-80-55-011	WZ-002C-12-45-011	WZ-002C-12-55-011
	100 mm welded plinth	1 pc.	WZ-1951-71-13-011	WZ-1951-71-12-011	WZ-1951-71-09-011	WZ-1951-71-08-011	WZ-1951-71-03-011	WZ-1951-71-02-011
	200 mm welded plinth	1 pc.	WZ-1951-74-13-011	WZ-1951-74-12-011	WZ-1951-74-09-011	WZ-1951-74-08-011	WZ-1951-74-03-011	WZ-1951-74-02-011
	Mounting plates infill	1 pc.	WZ-1951-47-02-000	WZ-1951-47-02-000	WZ-1951-47-02-000	WZ-1951-47-02-000	WZ-1951-47-02-000	WZ-1951-47-02-000
	19" symmetrical swing frame	1 pc.	–	–	WZ-1951-29-02-011	WZ-1951-29-02-011	–	–
	19" asymmetrical swing frame	1 pc.	–	–	WZ-1951-20-02-011	WZ-1951-20-02-011	–	–
	Earthing bar set	1 pc.	WZ-1951-24-04-000	WZ-1951-24-04-000	WZ-1951-24-03-000	WZ-1951-24-03-000	WZ-1951-24-01-000	WZ-1951-24-01-000
	Potential equalisation bar	1 pc.	WZ-1951-25-04-000	WZ-1951-25-04-000	WZ-1951-25-03-000	WZ-1951-25-03-000	WZ-1951-25-01-000	WZ-1951-25-01-000
	Cable bar	1 pc.	WZ-1951-22-04-000	WZ-1951-22-04-000	WZ-1951-22-03-000	WZ-1951-22-03-000	WZ-1951-22-01-000	WZ-1951-22-01-000
	Support for cable bar	1 pc.	WZ-1951-66-03-000	WZ-1951-66-02-000	WZ-1951-66-03-000	WZ-1951-66-02-000	WZ-1951-66-03-000	WZ-1951-66-02-000
	Transverse cable bar	1 pc.	WZ-1951-65-03-000	WZ-1951-65-02-000	WZ-1951-65-03-000	WZ-1951-65-02-000	WZ-1951-65-03-000	WZ-1951-65-02-000
	Lightening set	1 set	WN-0208-05-02-011	WN-0208-05-02-011	WN-0208-05-03-011	WN-0208-05-03-011	WN-0208-05-05-011	WN-0208-05-05-011
	Kit of system lighting	1 set	WZ-1951-80-04-011	WZ-1951-80-04-011	WZ-1951-80-03-011	WZ-1951-80-03-011	WZ-1951-80-01-011	WZ-1951-80-01-011

MODULAR CABINETS SZE2

Front view
(cabinet with double-wing door)

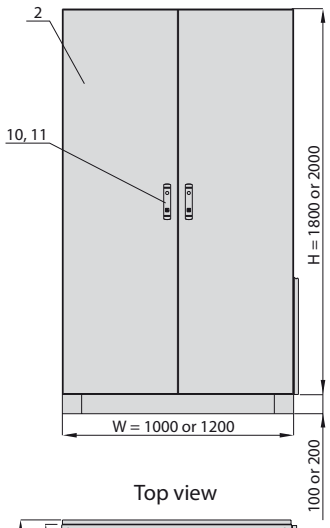

Side view
(with assembled roof and lifting eyes)

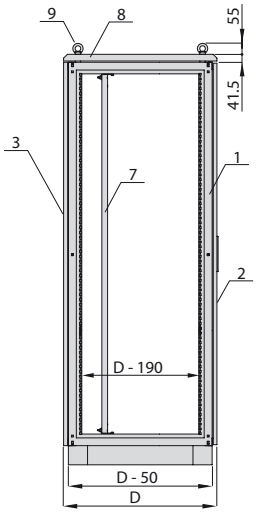

Mounting plate

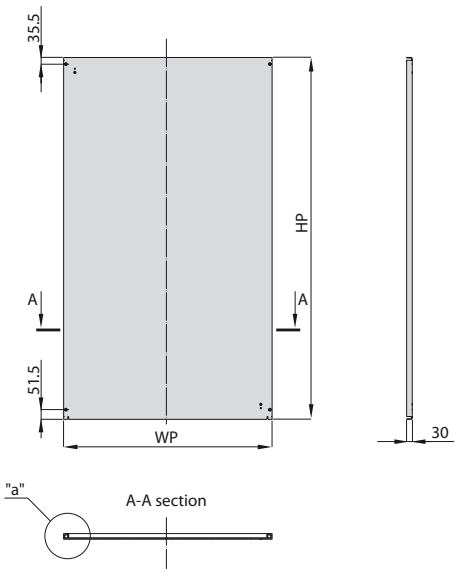

Top view

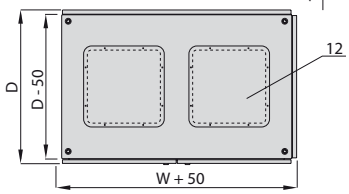

DESIGN

1. Cabinet's frame
2. Door
3. Rear panel
4. Flushed side panel
5. External side panel
6. Plinth
7. Mounting plate
8. Roof
9. Lifting eye
10. Lock with double-bit insert (factory installed)
11. Lock with swing handle and cylinder insert (optional)
12. Blanking plate

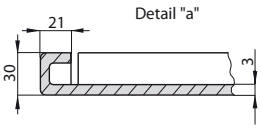

2000												
600				800				1000		1200		
400	500	600	800	400	500	600	800	500	600	500	600	800
1	1	1	1	1	1	1	1	2	2	2	2	2
1930	1930	1930	1930	1930	1930	1930	1930	1930	1930	1930	1930	1930
512	512	512	512	712	712	712	712	912	912	1112	1112	1112

WZ-1951-01-50-011	WZ-1951-01-12-011	WZ-1951-01-11-011	WZ-1951-01-10-011	WZ-1951-01-49-011	WZ-1951-01-09-011	WZ-1951-01-08-011	WZ-1951-01-07-011	WZ-1951-01-06-011	WZ-1951-01-05-011	WZ-1951-01-03-011	WZ-1951-01-02-011	WZ-1951-01-01-011
WZ-1951-09-13-011	WZ-1951-09-03-011	WZ-1951-09-02-011	WZ-1951-09-01-011	WZ-1951-09-13-011	WZ-1951-09-03-011	WZ-1951-09-02-011	WZ-1951-09-01-011	WZ-1951-09-03-011	WZ-1951-09-02-011	WZ-1951-09-03-011	WZ-1951-09-02-011	WZ-1951-09-01-011
WZ-1951-07-29-011	WZ-1951-07-07-011	WZ-1951-07-06-011	WZ-1951-07-05-011	WZ-1951-07-29-011	WZ-1951-07-07-011	WZ-1951-07-06-011	WZ-1951-07-05-011	WZ-1951-07-07-011	WZ-1951-07-06-011	WZ-1951-07-07-011	WZ-1951-07-06-011	WZ-1951-07-05-011
WZ-1951-27-14-011	WZ-1951-27-13-011	WZ-1951-27-12-011	WZ-1951-27-11-011	WZ-1951-27-10-011	WZ-1951-27-09-011	WZ-1951-27-08-011	WZ-1951-27-07-011	WZ-1951-27-06-011	WZ-1951-27-05-011	WZ-1951-27-03-011	WZ-1951-27-02-011	WZ-1951-27-01-011
WZ-1951-28-14-011	WZ-1951-28-13-011	WZ-1951-28-12-011	WZ-1951-28-11-011	WZ-1951-28-10-011	WZ-1951-28-09-011	WZ-1951-28-08-011	WZ-1951-28-07-011	WZ-1951-28-06-011	WZ-1951-28-05-011	WZ-1951-28-03-011	WZ-1951-28-02-011	WZ-1951-28-01-011
WZ-001C-60-35-011	WZ-001C-60-45-011	WZ-001C-60-55-011	WZ-001C-60-75-011	WZ-001C-80-35-011	WZ-001C-80-45-011	WZ-001C-80-55-011	WZ-001C-80-75-011	WZ-001C-10-45-011	WZ-001C-10-55-011	WZ-001C-12-45-011	WZ-001C-12-55-011	WZ-001C-12-75-011
WZ-002C-60-35-011	WZ-002C-60-45-011	WZ-002C-60-55-011	WZ-002C-60-75-011	WZ-002C-80-35-011	WZ-002C-80-45-011	WZ-002C-80-55-011	WZ-002C-80-75-011	WZ-002C-10-45-011	WZ-002C-10-55-011	WZ-002C-12-45-011	WZ-002C-12-55-011	WZ-002C-12-75-011
WZ-1951-71-14-011	WZ-1951-71-13-011	WZ-1951-71-12-011	WZ-1951-71-11-011	WZ-1951-71-10-011	WZ-1951-71-09-011	WZ-1951-71-08-011	WZ-1951-71-07-011	WZ-1951-71-06-011	WZ-1951-71-05-011	WZ-1951-71-03-011	WZ-1951-71-02-011	WZ-1951-71-01-011
WZ-1951-74-14-011	WZ-1951-74-13-011	WZ-1951-74-12-011	WZ-1951-74-11-011	WZ-1951-74-10-011	WZ-1951-74-09-011	WZ-1951-74-08-011	WZ-1951-74-07-011	WZ-1951-74-06-011	WZ-1951-74-05-011	WZ-1951-74-03-011	WZ-1951-74-02-011	WZ-1951-74-01-011
WZ-1951-47-01-000	WZ-1951-47-01-000	WZ-1951-47-01-000	WZ-1951-47-01-000	WZ-1951-47-01-000	WZ-1951-47-01-000	WZ-1951-47-01-000	WZ-1951-47-01-000	WZ-1951-47-01-000	WZ-1951-47-01-000	WZ-1951-47-01-000	WZ-1951-47-01-000	WZ-1951-47-01-000
–	–	–	–	WZ-1951-29-01-011	WZ-1951-29-01-011	WZ-1951-29-01-011	WZ-1951-29-01-011	–	–	–	–	–
–	–	–	–	WZ-1951-20-01-011	WZ-1951-20-01-011	WZ-1951-20-01-011	WZ-1951-20-01-011	–	–	–	–	–
WZ-1951-24-04-000	WZ-1951-24-04-000	WZ-1951-24-04-000	WZ-1951-24-04-000	WZ-1951-24-03-000	WZ-1951-24-03-000	WZ-1951-24-03-000	WZ-1951-24-03-000	WZ-1951-24-02-000	WZ-1951-24-02-000	WZ-1951-24-01-000	WZ-1951-24-01-000	WZ-1951-24-01-000
WZ-1951-25-04-000	WZ-1951-25-04-000	WZ-1951-25-04-000	WZ-1951-25-04-000	WZ-1951-25-03-000	WZ-1951-25-03-000	WZ-1951-25-03-000	WZ-1951-25-03-000	WZ-1951-25-02-000	WZ-1951-25-02-000	WZ-1951-25-01-000	WZ-1951-25-01-000	WZ-1951-25-01-000
WZ-1951-22-04-000	WZ-1951-22-04-000	WZ-1951-22-04-000	WZ-1951-22-04-000	WZ-1951-22-03-000	WZ-1951-22-03-000	WZ-1951-22-03-000	WZ-1951-22-03-000	WZ-1951-22-02-000	WZ-1951-22-02-000	WZ-1951-22-01-000	WZ-1951-22-01-000	WZ-1951-22-01-000
WZ-1951-66-04-000	WZ-1951-66-03-000	WZ-1951-66-02-000	WZ-1951-66-01-000	WZ-1951-66-04-000	WZ-1951-66-03-000	WZ-1951-66-02-000	WZ-1951-66-01-000	WZ-1951-66-03-000	WZ-1951-66-02-000	WZ-1951-66-03-000	WZ-1951-66-02-000	WZ-1951-66-01-000
WZ-1951-65-04-000	WZ-1951-65-03-000	WZ-1951-65-02-000	WZ-1951-65-01-000	WZ-1951-65-04-000	WZ-1951-65-03-000	WZ-1951-65-02-000	WZ-1951-65-01-000	WZ-1951-65-03-000	WZ-1951-65-02-000	WZ-1951-65-03-000	WZ-1951-65-02-000	WZ-1951-65-01-000
WN-0208-05-02-011	WN-0208-05-02-011	WN-0208-05-02-011	WN-0208-05-02-011	WN-0208-05-03-011	WN-0208-05-03-011	WN-0208-05-03-011	WN-0208-05-03-011	WN-0208-05-04-011	WN-0208-05-04-011	WN-0208-05-05-011	WN-0208-05-05-011	WN-0208-05-05-011
WZ-1951-80-04-011	WZ-1951-80-04-011	WZ-1951-80-04-011	WZ-1951-80-04-011	WZ-1951-80-03-011	WZ-1951-80-03-011	WZ-1951-80-03-011	WZ-1951-80-03-011	WZ-1951-80-02-011	WZ-1951-80-02-011	WZ-1951-80-01-011	WZ-1951-80-01-011	WZ-1951-80-01-011

SZE2 MODULAR CABINETS

Front view
(cabinets with single-wing door)

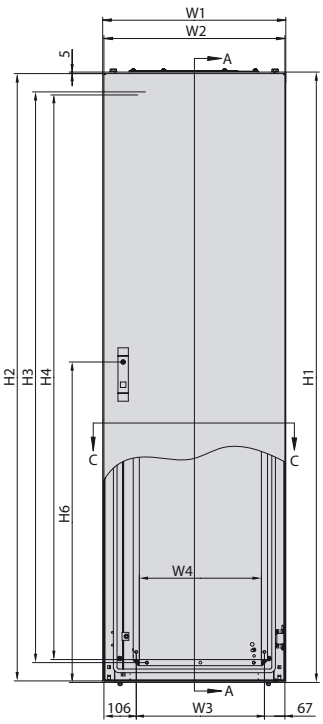

Front view
(cabinet with double-wing door)

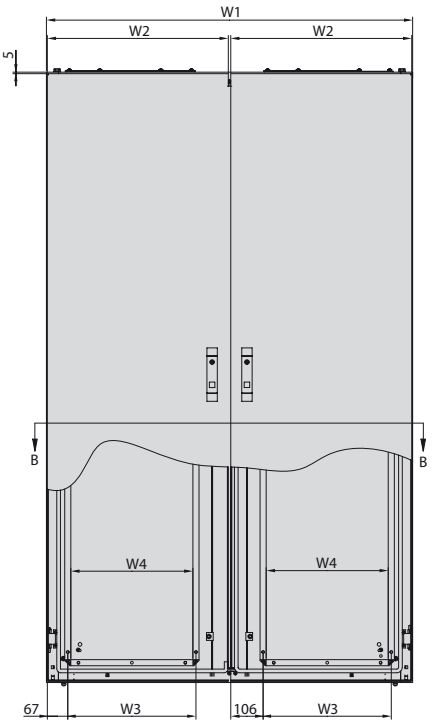

A-A section

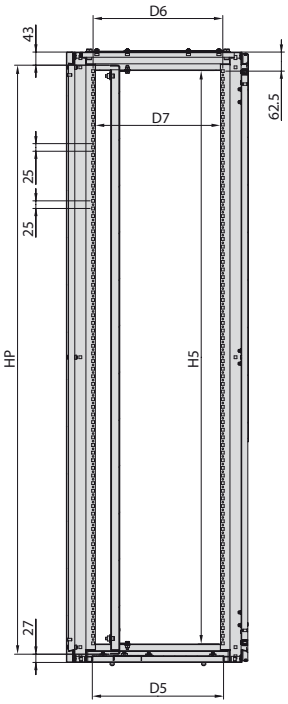

Top view

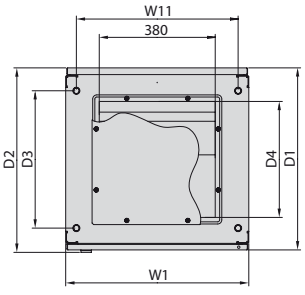

Top view

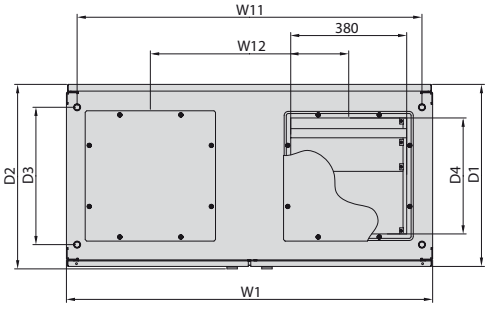

C-C section

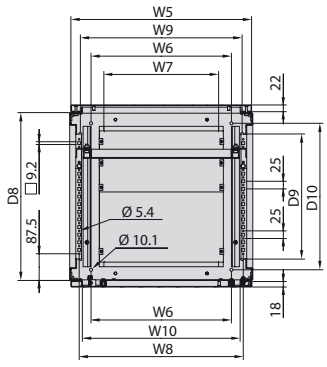

B-B section

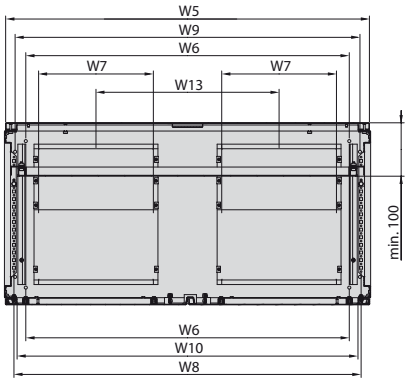

Cabinet's catalogue number	HEIGHT DIMENSIONS					
	H1	H2	H3	H4	H5	H6
WZ-1951-01-01-011	**2000**	1990	1870	1850	1879	1050
WZ-1951-01-02-011	**2000**	1990	1870	1850	1879	1050
WZ-1951-01-03-011	**2000**	1990	1870	1850	1879	1050
WZ-1951-01-05-011	**2000**	1990	1870	1850	1879	1050
WZ-1951-01-06-011	**2000**	1990	1870	1850	1879	1050
WZ-1951-01-07-011	**2000**	1990	1870	1850	1879	1050
WZ-1951-01-08-011	**2000**	1990	1870	1850	1879	1050
WZ-1951-01-09-011	**2000**	1990	1870	1850	1879	1050
WZ-1951-01-49-011	**2000**	1990	1870	1850	1879	1050
WZ-1951-01-10-011	**2000**	1990	1870	1850	1879	1050
WZ-1951-01-11-011	**2000**	1990	1870	1850	1879	1050
WZ-1951-01-12-011	**2000**	1990	1870	1850	1879	1050
WZ-1951-01-50-011	**2000**	1990	1870	1850	1879	1050
WZ-1951-01-14-011	**1800**	1790	1670	1650	1679	950
WZ-1951-01-15-011	**1800**	1790	1670	1650	1679	950
WZ-1951-01-20-011	**1800**	1790	1670	1650	1679	950
WZ-1951-01-21-011	**1800**	1790	1670	1650	1679	950
WZ-1951-01-23-011	**1800**	1790	1670	1650	1679	950
WZ-1951-01-24-011	**1800**	1790	1670	1650	1679	950

MODULAR CABINETS SZE2

Modular plinth
(openings for floor fastening)

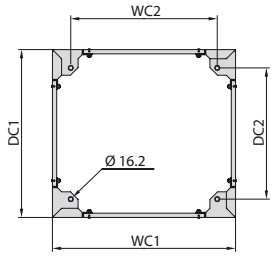

Welded plinth
(openings for floor fastening)

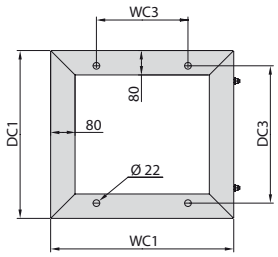

Mounting plate

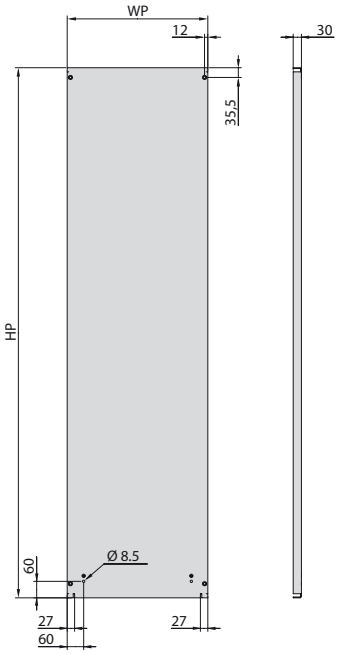

Note:
After mounting of external side panels the cabinet expands by 25 mm on each side.
An additional distance of 3 mm (gasket gauge) should be considered between bayed cabinets.

WIDTH DIMENSIONS													DEPTH DIMENSIONS										MOUNTING PLATE		PLINTH					
W1	W2	W3	W4	W5	W6	W7	W8	W9	W10	W11	W12	W13	D1	D2	D3	D4	D5	D6	D7	D8	D9	D10	HP	WP	WC1	WC2	WC3	DC1	DC2	DC3
1200	593	420	400	1192	1060	376	1137,6	1130	1117	1130	650	600	**800**	808	650	380	630	625	610	750	610	680	1930	1112	1200	1080	900	750	630	650
1200	593	420	400	1192	1060	376	1137,6	1130	1117	1130	650	600	**600**	608	450	380	430	425	410	550	410	480	1930	1112	1200	1080	900	550	430	450
1200	593	420	400	1192	1060	376	1137,6	1130	1117	1130	550	600	**500**	508	350	380	330	325	310	450	310	380	1930	1112	1200	1080	900	450	330	350
1000	493	320	300	992	860	326	937,6	930	917	930	—	450	**600**	608	450	380	430	425	410	550	410	480	1930	912	1000	880	700	550	430	450
1000	493	320	300	992	860	326	937,6	930	917	930	—	450	**500**	508	350	380	330	325	310	450	310	380	1930	912	1000	880	700	450	330	350
800	793	620	600	792	660	579	737,6	730	717	730	—	—	**800**	808	650	380	630	625	610	750	610	680	1930	712	800	680	500	750	630	650
800	793	620	600	792	660	579	737,6	730	717	730	—	—	**600**	608	450	380	430	425	410	550	410	480	1930	712	800	680	500	550	430	450
800	793	620	600	792	660	579	737,6	730	717	730	—	—	**500**	508	350	380	330	325	310	450	310	380	1930	712	800	680	500	450	330	350
800	793	620	600	792	660	579	737,6	730	717	730	—	—	**400**	408	250	210	230	225	210	350	210	280	1930	712	800	680	500	350	230	250
600	593	420	400	592	460	376	537,6	530	517	530	—	—	**800**	808	650	380	630	625	610	750	610	680	1930	512	600	480	300	750	630	650
600	593	420	400	592	460	376	537,6	530	517	530	—	—	**600**	608	450	380	430	425	410	550	410	480	1930	512	600	480	300	550	430	450
600	593	420	400	592	460	376	537,6	530	517	530	—	—	**500**	508	350	380	330	325	310	450	310	380	1930	512	600	480	300	450	330	350
600	593	420	400	592	460	376	537,6	530	517	530	—	—	**400**	408	250	210	230	225	210	350	210	280	1930	512	600	480	300	350	230	250
1200	593	420	400	1192	1060	376	1137,6	1130	1117	1130	650	600	**600**	608	450	380	430	425	410	550	410	480	1730	1112	1200	1080	900	550	430	450
1200	593	420	400	1192	1060	376	1137,6	1130	1117	1130	550	600	**500**	508	350	380	330	325	310	450	310	380	1730	1112	1200	1080	900	450	330	350
800	793	620	600	792	660	576	737,6	730	717	730	—	—	**600**	608	450	380	430	425	410	550	410	480	1730	712	800	680	500	550	430	450
800	793	620	600	792	660	576	737,6	730	717	730	—	—	**500**	508	350	380	330	325	310	450	310	380	1730	712	800	680	500	450	330	350
600	593	420	400	592	460	376	537,6	530	517	530	—	—	**600**	608	450	380	430	425	410	550	410	480	1730	512	600	480	300	550	430	450
600	593	420	400	592	460	376	537,6	530	517	530	—	—	**500**	508	350	380	330	325	310	450	310	380	1730	512	600	480	300	450	330	350

SZE2 MODULAR CABINETS

BOTTOM PLATE TYPES

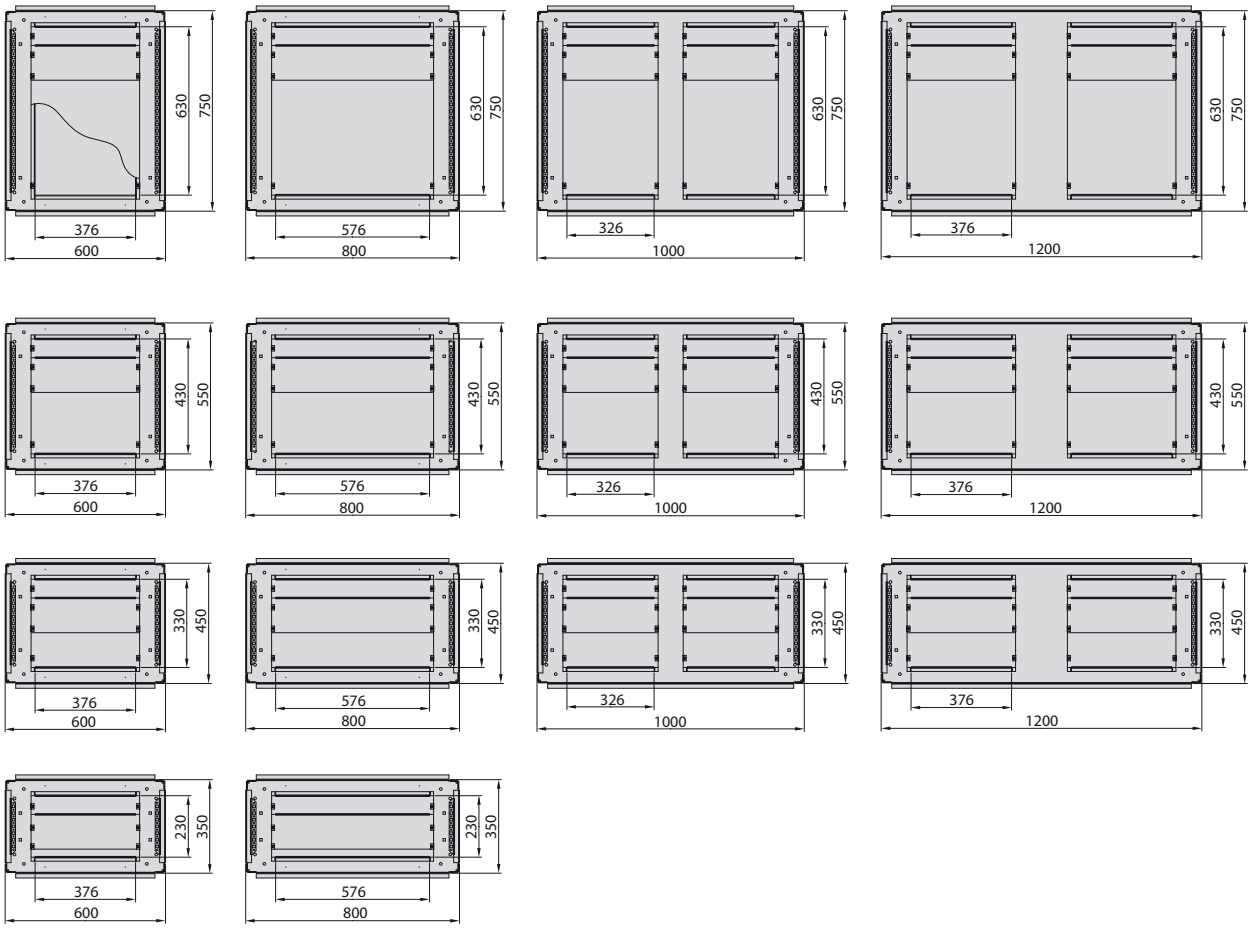

Note:
Standard openings in bottom plates are blinded with sliding gland plates. Optional types of gland plates - see page 308

Note:
On request there is a possibility to make a different type of gland plates and changes in design of the bottom plate.

MODULAR CABINETS SZE2

TOP PLATE TYPES

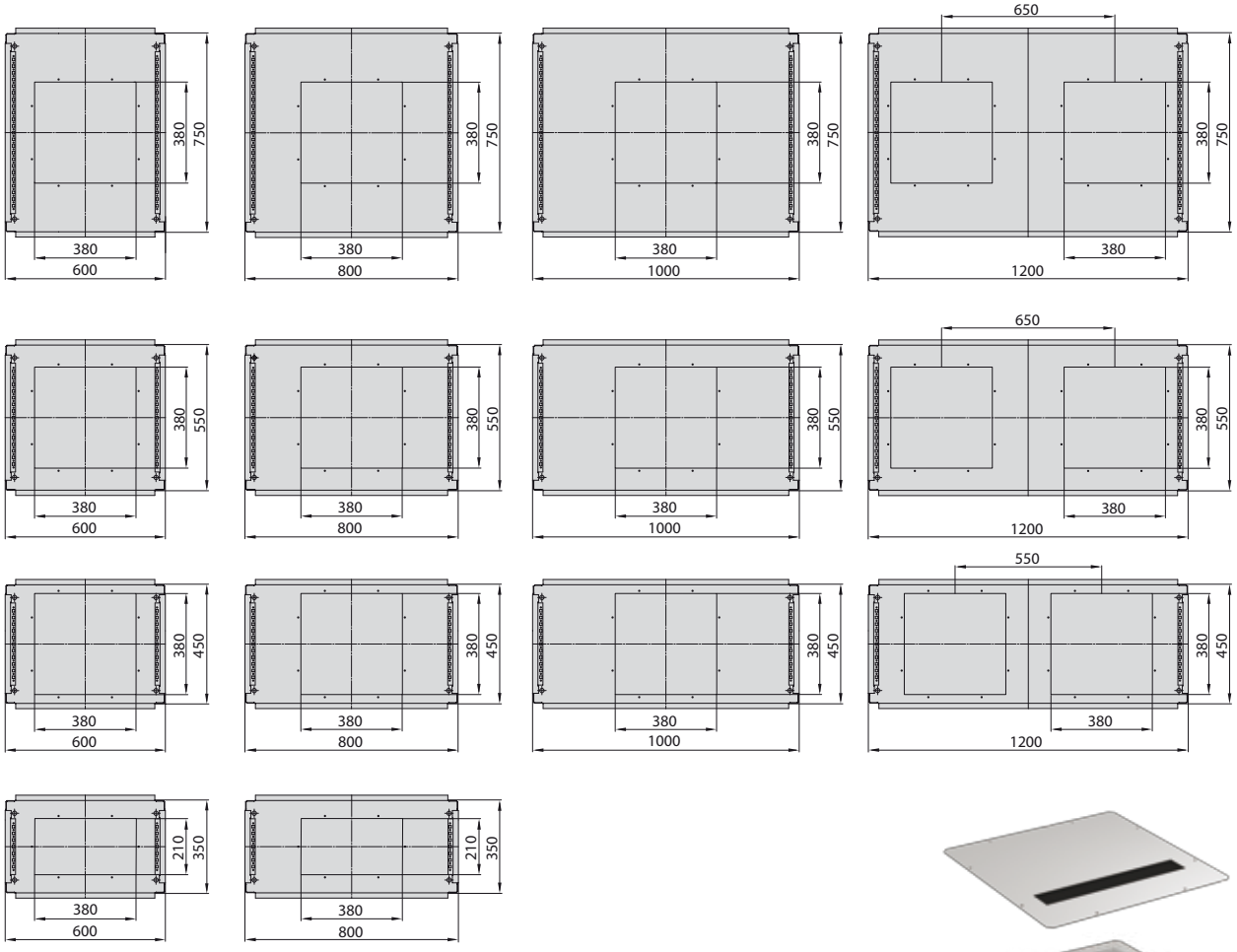

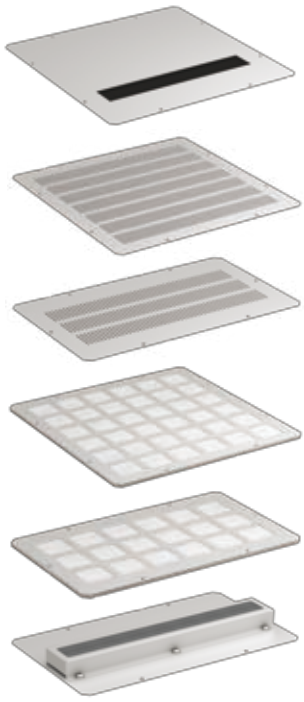

Blanking and cable entry plates for the cabinet's top plate – see page 309

Note:
Standard openings in top plates are blinded with solid blanking plates with sealing gaskets.
Optional types of blanking and cable entry plates – see page 309

SAMPLE CUSTOMISED CABINETS

Cabinets made of stainless steel

Cabinet for hydraulic measuring converters

SAMPLE CUSTOMISED CABINETS

Double-section SZE2 cabinet

SZE2 cabinet with air conditioner and 19" mounting profiles, height 24U (air conditioners - see page 313)

SZE2 cabinet with exhaust filters
(see page 312)

SAMPLE CUSTOMISED CABINETS

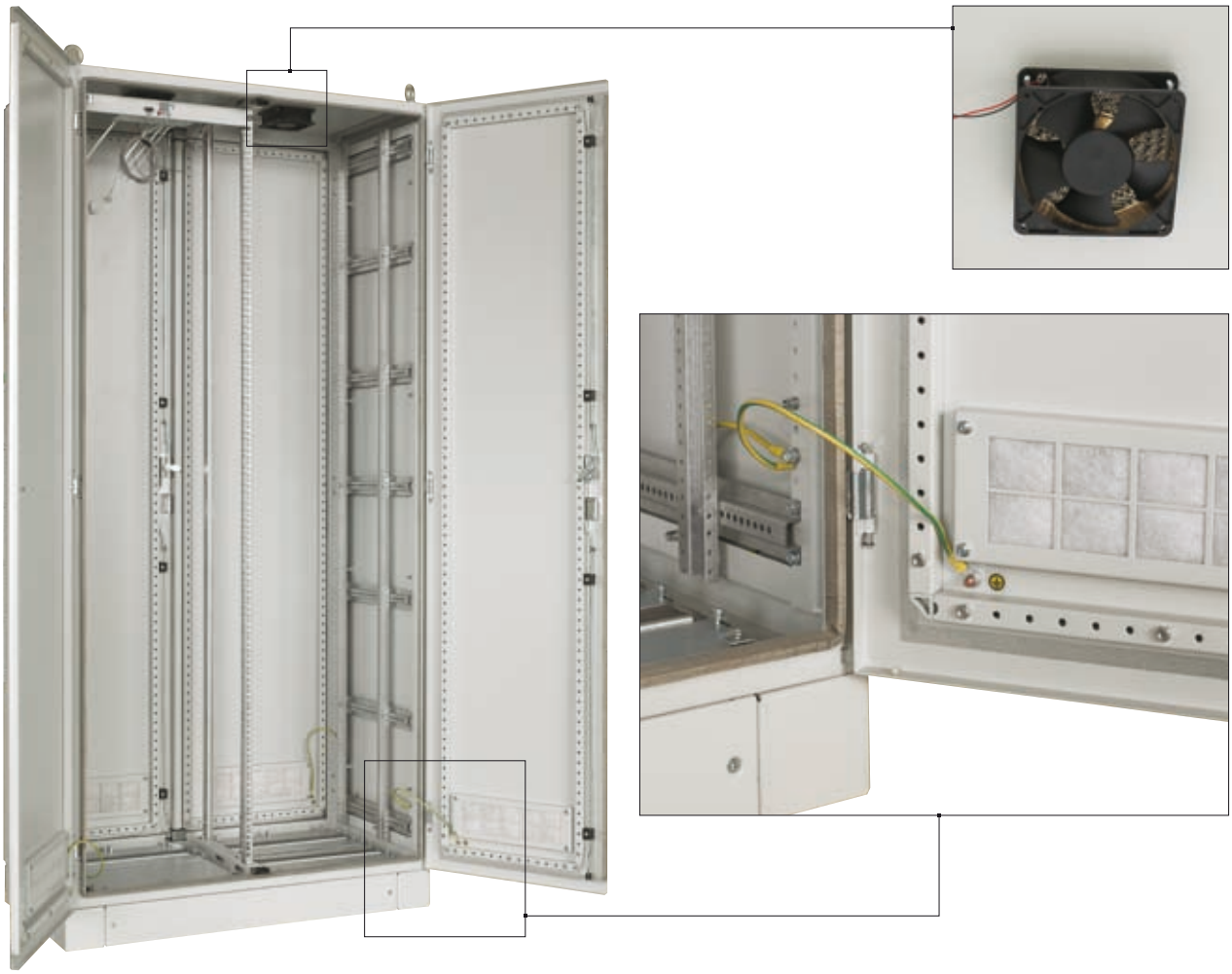

SZE2 cabinet conforming to EMC requirements

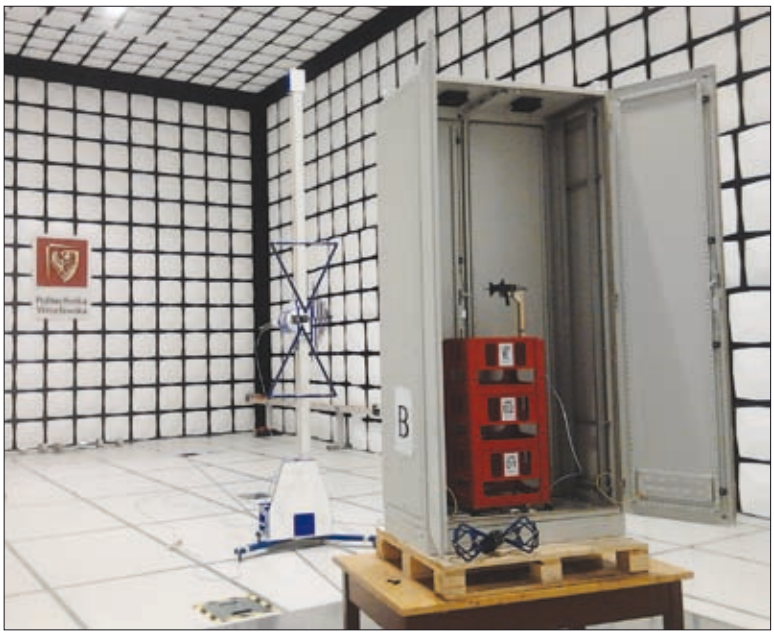

Electromagnetic compatibility tests in Wrocław University of Technology (Politechnika Wrocławska)

ACCESSORIES FOR SZE2 CABINETS

ACCESSORIES FOR SZE2 CABINETS

ACCESSORIES FOR SZE2 CABINETS

DOORS

Single-wing door with glass

Lock with double-bit insert (factory installed)

Doors

Intended for use instead of front solid door or rear panel.

Maximum door opening angle: 120°

Material:
Sheet steel textured powder paint, light grey (RAL 7035), stiffened profiles, brown smoked safety glass

Scope of delivery:
Complete wing of door with hinges and lock that includes doublebit insert (no handle).

SINGLE-WING DOOR

For cabinet		Door dimensions		Catalogue number					
height [mm]	width [mm]	H [mm]	W [mm]	Solid door IP 54	Door with glass IP 54	Door with ventilation IP 54		Door with glass and ventilation IP 54	
				right/left	right/left	right	left	right	left
2000	800	1990	793	WZ-1951-10-01-011	WZ-1951-17-01-011	WZ-1951-40-01-011	WZ-1951-40-09-011	WZ-1951-36-01-011	WZ-1951-36-09-011
	600	1990	593	WZ-1951-10-02-011	WZ-1951-17-02-011	WZ-1951-40-02-011	WZ-1951-40-10-011	WZ-1951-36-02-011	WZ-1951-36-10-011
1800	800	1790	793	WZ-1951-10-03-011	WZ-1951-17-03-011	WZ-1951-40-03-011	WZ-1951-40-11-011	WZ-1951-36-03-011	WZ-1951-36-11-011
	600	1790	593	WZ-1951-10-04-011	WZ-1951-17-04-011	WZ-1951-40-04-011	WZ-1951-40-12-011	WZ-1951-36-04-011	WZ-1951-36-12-011

Package: 1 pc.

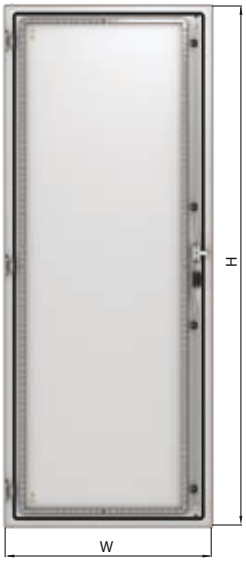

DOUBLE-WING DOOR

For cabinet		Door dimensions			Catalogue number					
					Solid door IP 54		Door with glass IP 54		Door with ventilation IP 54	
height [mm]	width [mm]	H [mm]	WR [mm]	WL [mm]	right* wing	left* wing	right* wing	left* wing	right* wing	left* wing
2000	1200	1990	593	619.5	WZ-1951-15-01-011	WZ-1951-13-01-011	WZ-1951-52-01-011	WZ-1951-54-01-011	WZ-1951-59-01-011	WZ-1951-57-01-011
	1000	1990	493	519.5	WZ-1951-15-02-011	WZ-1951-13-02-011	WZ-1951-52-02-011	WZ-1951-54-02-011	WZ-1951-59-02-011	WZ-1951-57-02-011
1800	1200	1790	593	619.5	WZ-1951-15-03-011	WZ-1951-13-03-011	WZ-1951-52-03-011	WZ-1951-54-03-011	WZ-1951-59-03-011	WZ-1951-57-03-011

Package: 1 pc. (wing)

*) when facing the structure

Door stop

Protects hinges from damage.
Fixed into the door's frame and cabinet's frame.
In the case of self-assembly, it is necessary to punch two 6 mm holes in indicated positions.

Material:
Galvanised sheet steel

Scope of delivery:
Door stop with fixing accessories for mounting into the cabinet.

Package	Catalogue number
1 pc.	WZ-1951-32-00-000

ACCESSORIES FOR SZE2 CABINETS

DOORS • ROOF AND SIDE PANELS

Swing handle with cylinder insert for the door's lock

For applying in the cabinet instead of the standard pattern that includes double-bit insert.

Material of the body:
Plastic

Scope of delivery:
Swing handle and cylinder are to be ordered separately.

Product name	Package	Catalogue number
Swing handle without cylinder insert	1 pc.	M1H-01-0024
Cylinder insert for swing handle + 2 keys	1 set	M1H-02-0028

Roof and fixing/spacer bolts

Roof

Each cabinet can be equipped with a roof in two widths:
- roof for cabinet with flushed side panels (roof's width in accordance with cabinet's frame width).
- roof for cabinet with external side panels (the roof's width expanded by 50 mm in comparison with the cabinet's frame).

Roof's height with fixing/spacer bolts: 41.5 mm.

Material:
Sheet steel powder painted in RAL 7035

Scope of delivery:
Roof with 4 fixing/spacer bolts for mounting.
(Assembly screws M12 are delivered with the cabinet.)

For cabinet		Catalogue number	
width [mm]	depth [mm]	Roof for cabinet with flushed side panel	Roof for cabinet with external side panels
1200	800	WZ-1951-27-01-011	WZ-1951-28-01-011
	600	WZ-1951-27-02-011	WZ-1951-28-02-011
	500	WZ-1951-27-03-011	WZ-1951-28-03-011
1000	600	WZ-1951-27-05-011	WZ-1951-28-05-011
	500	WZ-1951-27-06-011	WZ-1951-28-06-011
800	800	WZ-1951-27-07-011	WZ-1951-28-07-011
	600	WZ-1951-27-08-011	WZ-1951-28-08-011
	500	WZ-1951-27-09-011	WZ-1951-28-09-011
	400	WZ-1951-27-10-011	WZ-1951-28-10-011
600	800	WZ-1951-27-11-011	WZ-1951-28-11-011
	600	WZ-1951-27-12-011	WZ-1951-28-12-011
	500	WZ-1951-27-13-011	WZ-1951-28-13-011
	400	WZ-1951-27-14-011	WZ-1951-28-14-011

Package: 1 pc.

Side panels

Available in two options:
1) flushed side panels - do not affect overall domensions of the cabinet, also used as partition if cabinets are bayed.
2) external side panels - expanding the cabinet by 25 mm on each side.

All side panels are equipped with PU sealing gasket and stud-bolts for earthing cables.

Material:
Sheet steel powder painted in RAL 7035

Scope of delivery:
2 side panels (flushed or external) with fixing accessories for mounting into the cabinet.

For cabinet		Catalogue number	
height [mm]	depth [mm]	Flushed side panels	External side panels
2000	800	WZ-1951-09-01-011	WZ-1951-07-05-011
	600	WZ-1951-09-02-011	WZ-1951-07-06-011
	500	WZ-1951-09-03-011	WZ-1951-07-07-011
	400	WZ-1951-09-13-011	WZ-1951-07-29-011
1800	600	WZ-1951-09-05-011	WZ-1951-07-13-011
	500	WZ-1951-09-06-011	WZ-1951-07-14-011

Package: 2 pc.

Note:
Possibility to equip side panels with snapped filter fans and exhaust filter - see page 312

1 - flushed side panel

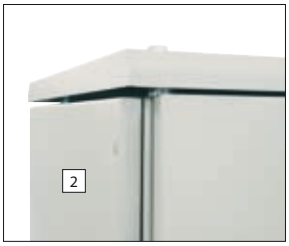

2 - external side panel

ACCESSORIES FOR SZE2 CABINETS

ROOF AND SIDE PANELS

Lifting angle

Eyebolt

Lifting accessories

Fixed to threaded holes in the top plate of the cabinet's frame or (when the roof is used) to fixing/spacer bolts.

Offered in two options:

1) eyebolts - galvanised steel, eye diameter: 30 mm, thread for fastening: M12;
2) lifting angle for cabinets bayed in rows - galvanised steel angle, lifting hole diameter: 38 mm, two holes for mounting screws M12.

Scope of delivery:

Lifting accessories are sold separately.
Lifting angle is supplied with mounting screws.

Product name	Package	Catalogue number
eyebolt	1 pc.	M1F-00-0106
lifting angle	1 pc.	WZ-1951-68-00-000

TRANSPORT OF SZE2 CABINETS

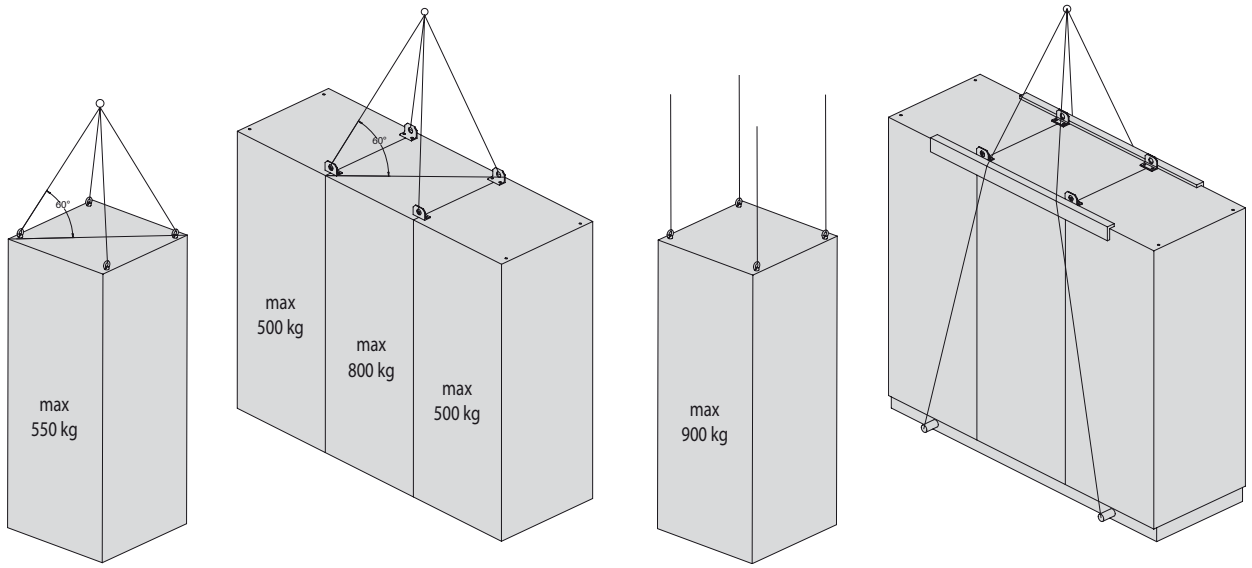

For larger loads, a set of cabinets should be preferably placed on a single shared welded plinth which reinforces the entire structure during transport. For advice on selection of an appropriate plinth type, please ask ZPAS S.A. design department.

Modular plinth

It consists of 4 corners and 4 or 8 removable side panels. Total weight of the cabinet is carried by plinth corners. It is possible to reach the area under the cabinet by unscrewing the side panels. Plinth can be mounted to the base by optionally using 4 rubber vibro-shock absorbers.

Ordering method:
Plinth includes the following elements: plinth corners with appropriate plinth side panels depending on the cabinet's width and depth.

Plinth side panels

There are three types of plinth side panels available - see the pictures. Each type has the standard height of 99 mm. Side panels can be removed even when the cabinet is loaded with equipment.

Material:
Sheet steel, powder painted in light grey (RAL 7035)

Scope of delivery:
Panel with fixing accessories.

Type of panel	Use	Length of side panel [mm]	Length of plinth's side [mm]	Catalogue number
solid	plinth's front or rear	1000	1200	WZ-1982-03-09-011
		800	1000	WZ-1982-03-08-011
		600	800	WZ-1982-03-07-011
		400	600	WZ-1982-03-05-011
	plinth's sides	550	750	WZ-1982-03-06-011
		350	550	WZ-1982-03-04-011
		250	450	WZ-1982-03-03-011
		150	350	WZ-1982-03-01-011
perforated	plinth's front or rear	1000	1200	WZ-1982-05-09-011
		800	1000	WZ-1982-05-08-011
		600	800	WZ-1982-05-07-011
		400	600	WZ-1982-05-05-011
	plinth's sides	550	750	WZ-1982-05-06-011
		350	550	WZ-1982-05-04-011
		250	450	WZ-1982-05-03-011
		150	350	WZ-1982-05-01-011
with brush opening	plinth's front or rear	1000	1200	WZ-1982-04-09-011
		800	1000	WZ-1982-04-08-011
		600	800	WZ-1982-04-07-011
		400	600	WZ-1982-04-05-011
	plinth's sides	550	750	WZ-1982-04-06-011
		350	550	WZ-1982-04-04-011
		250	450	WZ-1982-04-03-011
		150	350	WZ-1982-04-01-011

Package: 1 pc.

Solid side panel

Perforated side panel

Side panel with brush opening

ACCESSORIES FOR SZE2 CABINETS

CABINET'S BASE

Plinth corners

Available in two heights.

Material:
sheet steel powder painted in light grey (RAL 7035)

Scope of delivery:
Set of 4 corners include fixing accessories for assembling a plinth to the cabinet.

Height [mm]	Package	Catalogue number
200	4 pc.	WZ-2174-05-02-011
100	4 pc.	WZ-1982-08-02-011

Vibro-shock absorber

Corner with vibro-shock absorber

Vibro-shock absorbers

The simple plinths can be optionally equipped with vibroshock absorbers. Plinth with vibro-shock absorbers should be fixed into the room's floor. Four vibro-shock absorbers are needed for one plinth.

Material:
10 mm thick rubber

Scope of delivery:
Vibro-shock absorber (1 pc.) without fixing accessories.

Package	Catalogue number
1 pc.	M1Z-00-0048

Welded plinth

Indicated for heavy duty cabinets. Provide to transport cabinets with forklift truck without using transport pallet.

Material:
Sheet steel powder paint, light grey RAL 7035

Scope of delivery:
Plinth with mounting accessories for fastening plinth to the cabinet.

For cabinet		Catalogue number	
width [mm]	depth [mm]	Plinth 100 mm high	Plinth 200 mm high
1200	800	WZ-1951-71-01-011	WZ-1951-74-01-011
	600	WZ-1951-71-02-011	WZ-1951-74-02-011
	500	WZ-1951-71-03-011	WZ-1951-74-03-011
1000	600	WZ-1951-71-05-011	WZ-1951-74-05-011
	500	WZ-1951-71-06-011	WZ-1951-74-06-011
800	800	WZ-1951-71-07-011	WZ-1951-74-07-011
	600	WZ-1951-71-08-011	WZ-1951-74-08-011
	500	WZ-1951-71-09-011	WZ-1951-74-09-011
	400	WZ-1951-71-10-011	WZ-1951-74-10-011
600	800	WZ-1951-71-11-011	WZ-1951-74-11-011
	600	WZ-1951-71-12-011	WZ-1951-74-12-011
	500	WZ-1951-71-13-011	WZ-1951-74-13-011
	400	WZ-1951-71-14-011	WZ-1951-74-14-011

Package: 1 pc.

Mounting plate

The mounting plate is designed for installing different equipment inside the SZE2 cabinet.
Detailed dimensions of the mounting plates are given in the drawing on page 279.

Material:
Al-Zn-coated steel sheet with a thickness of 3 mm

Scope of delivery:
Mounting plate with cabinet fixing accessories.
Mounting plate guides are sold separately.

For cabinet		Catalogue number
Height [mm]	Width [mm]	
2000	1200	WZ-1951-67-01-000-BP
	1000	WZ-1951-67-04-000-BP
	800	WZ-1951-67-07-000-BP
	600	WZ-1951-67-10-000-BP
1800	1200	WZ-1951-67-13-000-BP
	800	WZ-1951-67-19-000-BP
	600	WZ-1951-67-22-000-BP

Package: 1 pc.

Note:
On special order, we make hinged mounting plates, using galvanized steel sheet or textolite plate.
The mounting plate can also be powder-painted in RAL 7035 (standard colour) or any other colour on demand.

Mounting plate

Mounting plate guides

The guides are designed for installing the mounting plate in the SZE2 cabinet. They make inserting and positioning the plate inside the cabinet easier.

Material:
Al-Zn-coated steel sheet

Scope of delivery:
Set of 2 guides together with accessories for fixing them on the bottom plate of the cabinet.

For cabinet depth [mm]	Catalogue number
800	WZ-1951-64-01-000
600	WZ-1951-64-02-000
500	WZ-1951-64-03-000
400	WZ-1951-64-04-000

Package: 1 set

Mounting plate guides

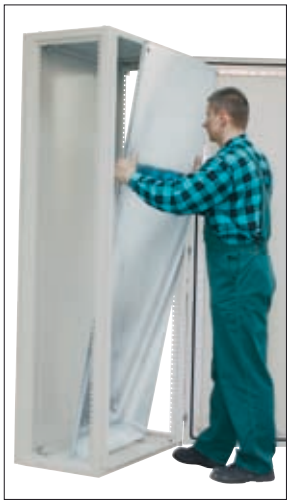

ACCESSORIES FOR SZE2 CABINETS

19" SWING FRAME

Asymmetrical swing frame in the cabinet

19" swing frame

Intended for SZE2 cabinets 800 and 600 mm wide.
Available in symmetrical and asymmetrical options.
Equipped with door-stop.
Two locks with double-bit insert.

Possibility of left- or right-side assembly by 180° rotation.

Maximum opening angle: 120°

Load capacity: 150 kg

Material:
Sheet steel and steel profiles powder painted in RAL 7035

Scope of delivery:
Swing frame with fixing accessories for mounting to the cabinet.

For cabinet		Usable height of the frame HU [U = 44.45 mm]	Swing frame type	Maximum depth for installations D_{max} [mm]	Catalogue number
Width [mm]	Height [mm]				
800	2000	40 U	symmetrical	360	WZ-1951-29-01-011
			asymmetrical	440	WZ-1951-20-01-011
	1800	35,5 U	symmetrical	360	WZ-1951-29-02-011
			asymmetrical	440	WZ-1951-20-02-011
600	2000	40 U	symmetrical	180	WZ-1951-29-05-011

Package: 1 pc.

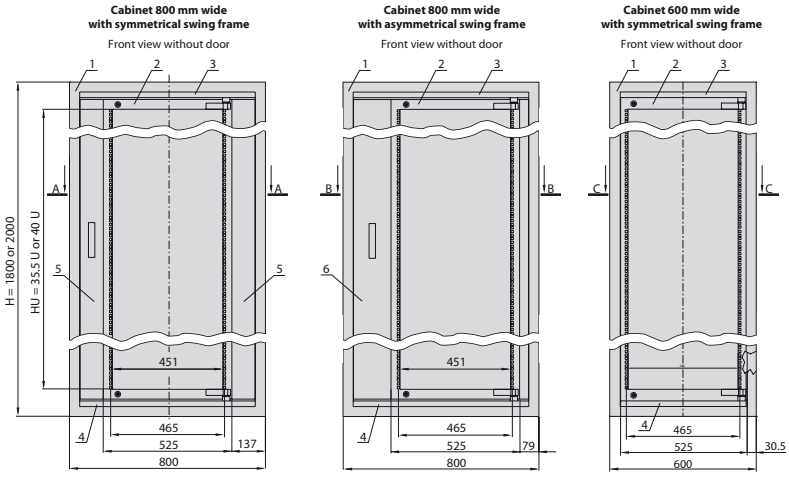

DESIGN

1. Cabinet frame
2. 19" swing frame
3. Top supporting bar
4. Bottom supporting bar
5. Masking panel for symmetrical frame
6. Masking panel for asymmetrical frame

Electric meter box

It is used for installation of electricity meters in the SZE2 cabinet with 19" swing frame, 19" mounting profiles or mounting profiles II.

Material:
Steel sheet powder painted in RAL 7035

Scope of delivery:
Electric meter box with fixing accessories for mounting to the cabinet.

Installation method to the cabinet	External dimensions [mm]			Internal dimensions [mm]		Catalogue number
	height [mm]	width [mm]	depth [mm]	height [mm]	width [mm]	
On 19" mounting profiles or 19" swing frame (pages 296-297, 294)	444.5 (10U)	482.6	150	401.5	440	WZ-5716-38-01-011
On mounting profiles II (page 315)	450	482.6	150	407	440	WZ-5716-38-02-011
	450	682.6	150	407	640	WZ-5716-38-03-011

Package: 1 pc.

Voltage distribution panel

Universal 19" enclosure for modular devices.

Capacity of panel:
maximum number of built-in S-type modules (width of module 17.5 mm): 22 pcs.

Material:
Steel sheet powder painted in RAL 7035

Scope of delivery:
mounting base, DIN rail, housing, fixing accessories for mounting to the cabinet.

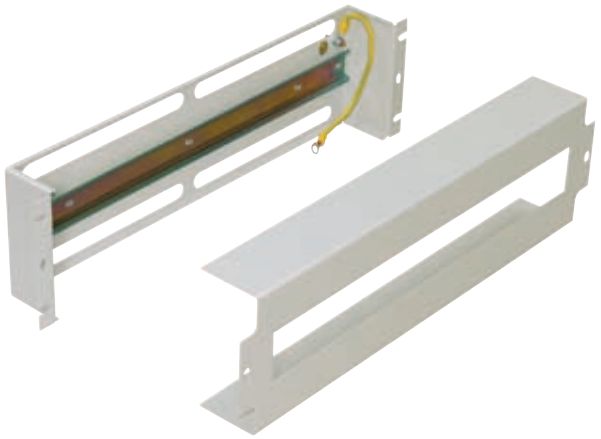

Note:

On individual request, the panel can be fitted with electrical equipment - see page 156

Installation method to the cabinet	External dimensions [mm]			Internal dimensions [mm]		Catalogue number	
	height [mm]	width [mm]	depth [mm]	height [mm]	width [mm]	RAL 7035	RAL 9005
On 19" mounting profiles or 19" swing frame (pages 296-297, 294)	133 (3U)	482.6	60	130	440	WZ-PS3U-00-00-011	WZ-PS3U-00-00-161

Package: 1 pc.

ACCESSORIES FOR SZE2 CABINETS

19" MOUNTING PROFILES SYSTEM

19" rack construction methods

19" rack in a cabinet with a width of 600 mm

1. 19" mounting profile (page 297)
2. Mounting bar UNI (page 300)

19" rack in a cabinet with a width of 800 mm

1. 19" mounting profile (page 297)
2. Mounting bar UNI (page 300)
3. Outrigger (page 297)

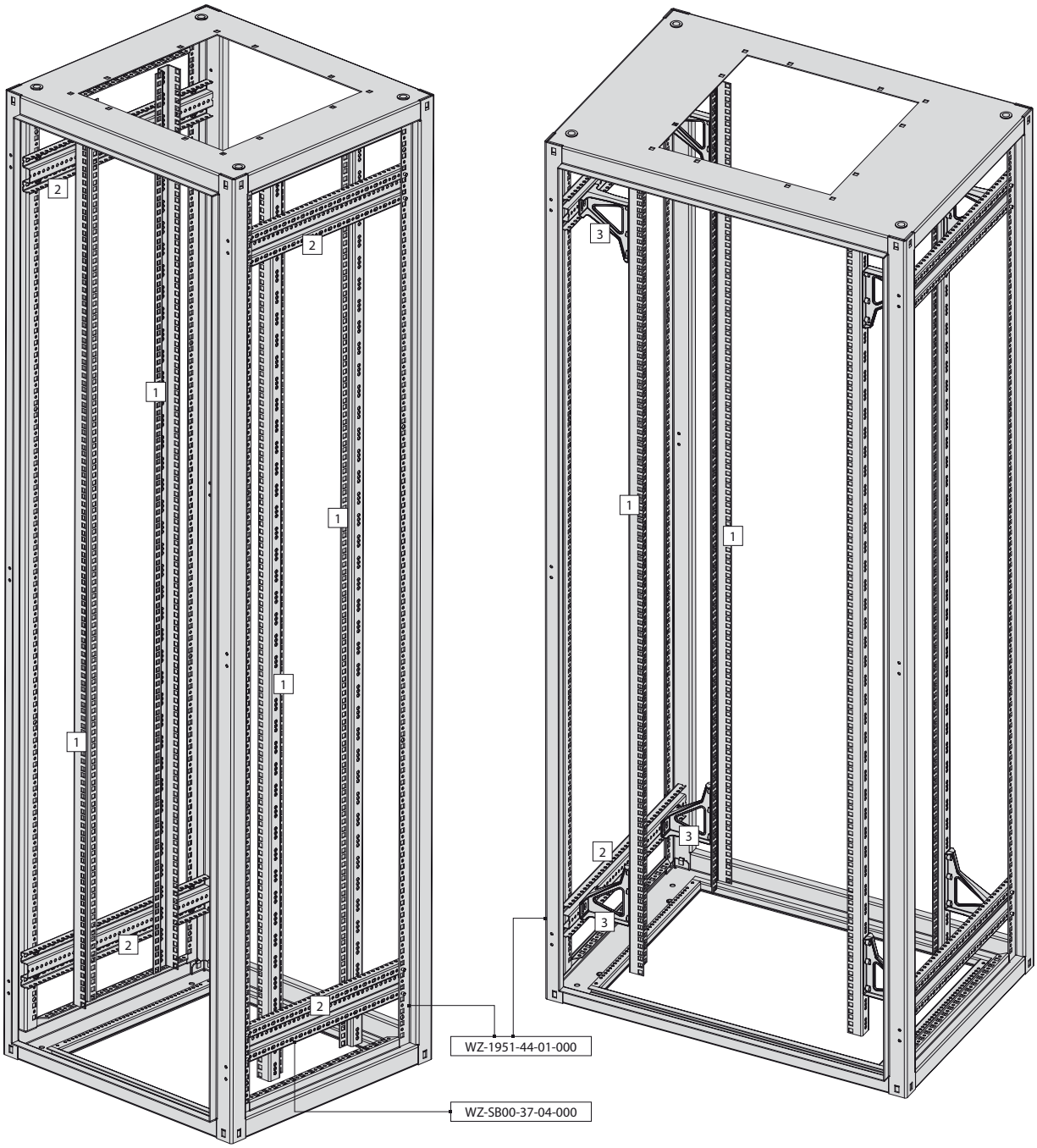

Used fixing accessories:

WZ-1951-44-01-000 - M6x16 self-forming screws (see page 301)
WZ-SB00-37-04-000 - fixing accessories for mounting profiles (see pages 118, 315)

19" mounting profile

Used for installing 19" equipment in cabinets 600 or 800 mm wide. They are fixed to the cabinet's frame by using mounting bars UNI; in order to achieve the 19" spacing in cabinets 800 mm wide it is necessary to use outriggers, while in cabinets 1000 and 1200 mm wide an individual rack made of mounting bars UNI.

Material:
Al-Zn coated sheet steel

Scope of delivery:
Mounting profile without fixing accessories.

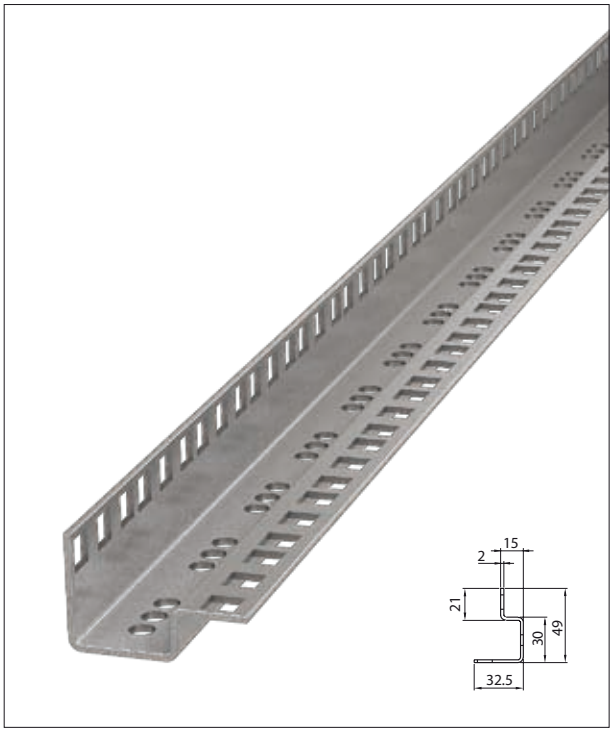

Length of mounting profile		Catalogue number
[mm]	[U = 44.45 mm]	
1868	42 U	WZ-1718-97-02-000
1779	40 U	WZ-1718-97-03-000
1734	39 U	WZ-1718-97-13-000
1690	38 U	WZ-1718-97-04-000
1601	36 U	WZ-1718-97-05-000
1468	33 U	WZ-1718-97-14-000
1423	32 U	WZ-1718-97-06-000
1334	30 U	WZ-1718-97-15-000
1245	28 U	WZ-1718-97-07-000
1201	27U	WZ-1718-97-16-000
1067	24 U	WZ-1718-97-08-000
934	21U	WZ-1718-97-17-000
801	18 U	WZ-1718-97-09-000
667	15 U	WZ-1718-97-10-000
534	12 U	WZ-1718-97-11-000
445	10 U	WZ-1718-97-12-000

Package: 1 pc.

Outrigger

For fixing mounting profile in SZE2 cabinet 800 mm wide.

Material:
Zamak casting

Scope of delivery:
1 outrigger with fixing accessories for fastening to mounting profile and mounting bar UNI.

Package	Catalogue number
1 pc.	WZ-5205-90-00-C12

ACCESSORIES FOR SZE2 CABINETS

MOUNTING BARS SYSTEM

Rack construction methods - mounting bars system

CLASSIC system

1. Mounting bar CLASSIC (page 299)
2. Cross bar CLASSIC (page 299)
3. Vertical bar CLASSIC (page 300)

UNI system

5. Mounting bar UNI (page 300)
6. Angle-element for joining mounting bars UNI (page 301)

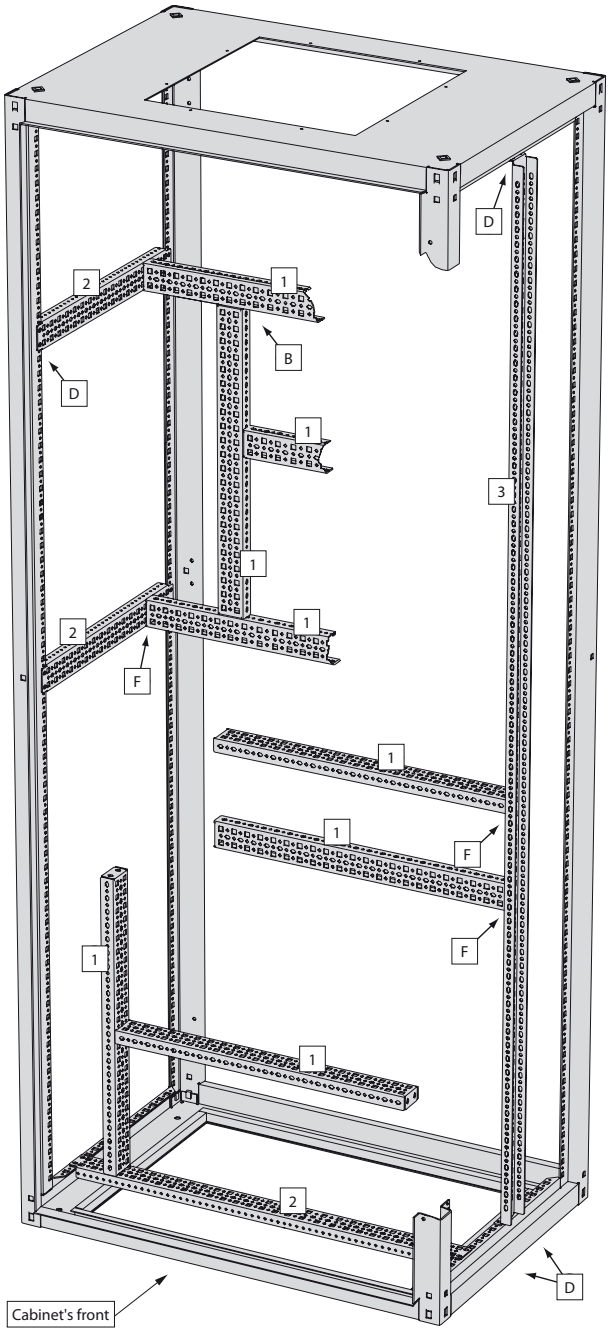

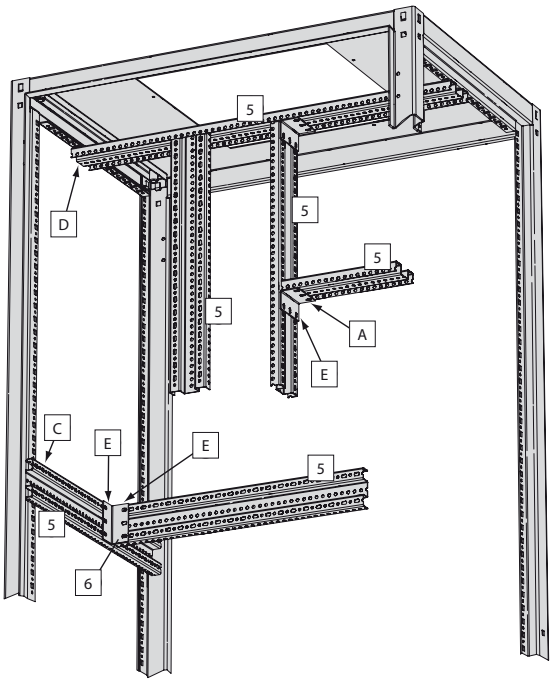

FIXING ACCESSORIES

	Description	pcs.	From set* cat. number
A	screw with nut and washers	1	WZ-1951-44-03-000
B	screw with nut and washers	2	WZ-1951-44-03-000
C	self-forming screw	1	WZ-1951-44-01-000
	or screw with cage nut and washer	2	WZ-1951-44-02-000
D	self-forming screw	2	WZ-1951-44-01-000
	or screw with cage nut and washer	2	WZ-1951-44-02-000
E	self-forming screw	2	WZ-1951-44-01-000
	or screw with nut and washers	2	WZ-1951-44-03-000
F	screw with cage nut and washer	2	WZ-1951-44-02-000
	or screw with nut and washers	2	WZ-1951-44-03-000

*) Fixing accessories are sold in sets 20 pcs/1 set.
A detailed description is available on page 301.

Mounting bar CLASSIC

Fixed to cross bars or vertical bar.

Material:
Al-Zn coated sheet steel

Scope of delivery:
Mounting bar without fixing accessories (fixing accessories are listed on page 301).

Mounting bar lenght [mm]	Catalogue number
1200	WZ-0573-12-01-000
1150	WZ-0573-12-02-000
1100	WZ-0573-12-03-000
1050	WZ-0573-12-04-000
1000	WZ-0573-12-05-000
950	WZ-0573-12-06-000
900	WZ-0573-12-07-000
850	WZ-0573-12-08-000
800	WZ-0573-12-09-000
775	WZ-0573-12-10-000
750	WZ-0573-12-11-000
700	WZ-0573-12-12-000

Mounting bar lenght [mm]	Catalogue number
650	WZ-0573-12-13-000
600	WZ-0573-12-14-000
550	WZ-0573-12-15-000
525	WZ-0573-12-16-000
500	WZ-0573-12-17-000
450	WZ-0573-12-18-000
400	WZ-0573-12-19-000
350	WZ-0573-12-20-000
300	WZ-0573-12-21-000
275	WZ-0573-12-22-000
250	WZ-0573-12-23-000
225	WZ-0573-12-24-000
200	WZ-0573-12-25-000

Package: 1 pc.

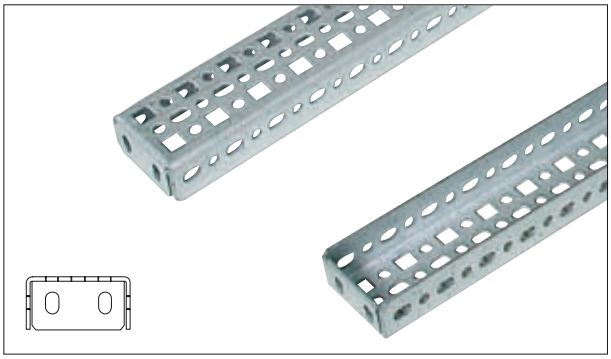

MATCHING MOUNTING BAR CLASSIC TO CABINET'S WIDTH

Cabinet width [mm]	Lenght of mounting bar CLASSIC [mm]
1200	1150
1000	950
800	750
600	550

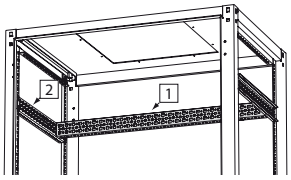

1. Mounting bar CLASSIC
2. Cross bar CLASSIC

Cross bar CLASSIC

Fixed to vertical or horizontal slots of the cabinet's frame.

Material:
Al-Zn coated sheet steel

Scope of delivery:
Cross bar without fixing accessories (fixing accessories are listed on page 301).

For cabinet		Cross bar length [mm]	Catalogue number
width [mm]	depth [mm]		
-	800	640	WZ-1951-46-01-000
-	600	440	WZ-1951-46-02-000
-	500	340	WZ-1951-46-03-000
-	400	240	WZ-1951-46-04-000
1200	-	1152.5	WZ-1951-46-05-000
1000	-	952.5	WZ-1951-46-06-000
800	-	752.5	WZ-1951-46-07-000
600	-	552.5	WZ-1951-46-08-000

Package: 1 pc.

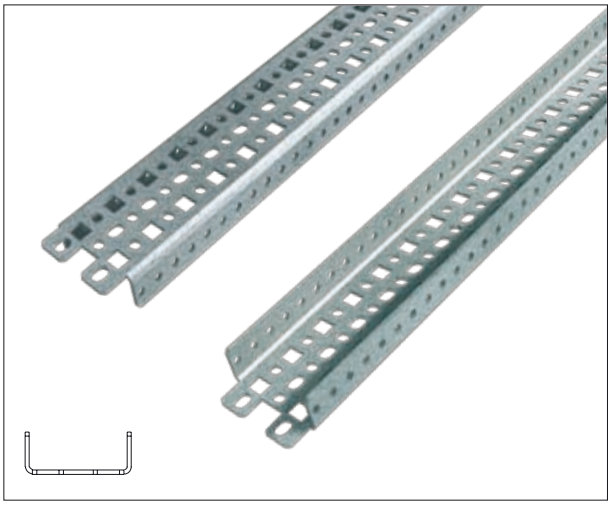

ACCESSORIES FOR SZE2 CABINETS

MOUNTING BARS SYSTEM

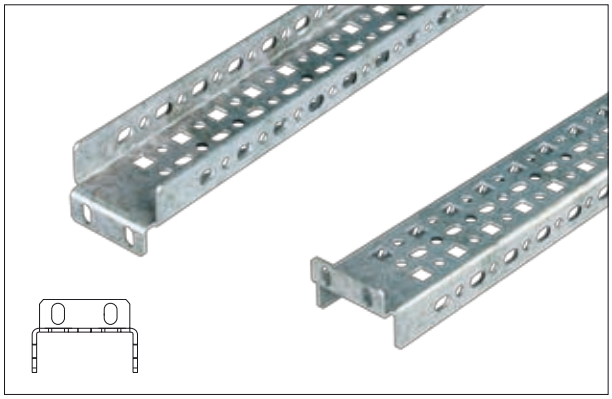

Vertical bar CLASSIC

Fixed to the bottom and top plate of the cabinet's frame.

Material:
Al-Zn coated sheet steel

Scope of delivery:
Vertical bar without fixing accessories (fixing accessories are listed on page 301).

For cabinet height [mm]	Vertical bar lenght [mm]	Catalogue number
2000	1875	WZ-1951-48-01-000
1800	1675	WZ-1951-48-02-000

Package: 1 pc.

Mounting bar UNI

Mounting bars UNI enable configuration of any rack inside the cabinet.
Slots in the bars are adjusted both for horizontal and vertical slots of the cabinet's frame.
The standard offer includes bars whose length is adjusted to the cabinet's dimensions (see the chart below). Other lengths of bars are available on customer's request.
It is possible to select the length of bar individually by cutting bars during the assembly.

Material:
Al-Zn coated sheet steel

Scope of delivery:
Mounting bar without fixing accessories.

For cabinet			Length of mounting bar [mm]	Catalogue number
height [1] [mm]	width [2] [mm]	depth [3] [mm]		
2000	-	-	1875	WZ-1951-19-01-000
1800	-	-	1675	WZ-1951-19-02-000
1600	-	-	1475	WZ-1951-19-03-000
1200	-	-	1075	WZ-1951-19-04-000
-	1200	-	1162.5	WZ-1951-19-05-000
-	1000	-	962.5	WZ-1951-19-06-000
-	800	-	762.5	WZ-1951-19-07-000
-	600	-	562.5	WZ-1951-19-08-000
-	-	800	700	WZ-1951-19-09-000
-	-	600	500	WZ-1951-19-10-000
-	-	500	400	WZ-1951-19-11-000
-	-	400	300	WZ-1951-19-12-000

Package: 1 pc.

Methods of fastening bars in the cabinet (look at page 298):
[1]) Indirect fastening by bars cat. No from WZ-1951-19-05-000 to WZ-1951-19-08-000.
[2]) Direct fastening to the bottom or top plate.
[3]) Direct fastening to the cabinet's posts.

Angle element for joining mounting bars UNI

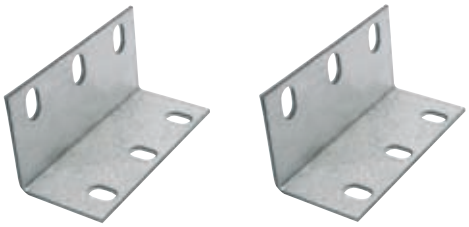

Material:
Al-Zn coated sheet steel

Scope of delivery:
1 angle element without fixing accessories.

Package	Catalogue number
1 pc.	WZ-1951-21-00-000

Fixing accessories for CLASSIC and UNI bars

Application in accordance with instructions on page 298.
They are sold in sets of 20 pcs. each.

Description	Package = 1 set	Catalogue number
1) Self forming screw M6x16	20 pcs.	WZ-1951-44-01-000
2) Screw M6x16 Cage nut M6 Washer 6.4	20 pcs. 20 pcs. 20 pcs.	WZ-1951-44-02-000
3) Screw M6x16 Nut M6 Washer 6.4	20 pcs. 20 pcs. 40 pcs.	WZ-1951-44-03-000

1

2

3

ACCESSORIES FOR SZE2 CABINETS

CABLE MANAGEMENT

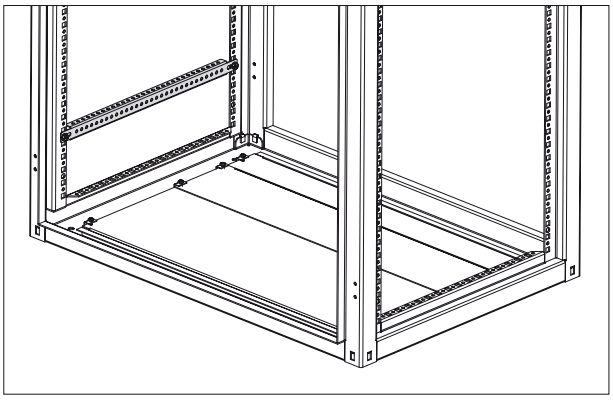

Transverse cable bar

Used for cable bundle assemblies. Fixed in the horizontal position to the side of the cabinet (to slots in the frame profiles) or to the door frame.

Fixing method:
using self forming screws or using screw with cage nut and washer - see page 301

Material:
Al-Zn coated sheet steel

Scope of delivery:
Transverse cable bar without fixing accessories (fixing accessories are listed on page 301).

For cabinet depth [mm]	Length of bar [mm]	Catalogue number
800	640	WZ-1951-65-01-000
600	440	WZ-1951-65-02-000
500	340	WZ-1951-65-03-000
400	240	WZ-1951-65-04-000

Package: 1 pc.

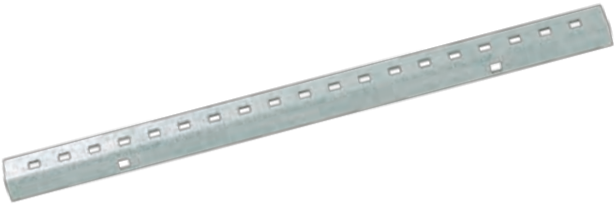

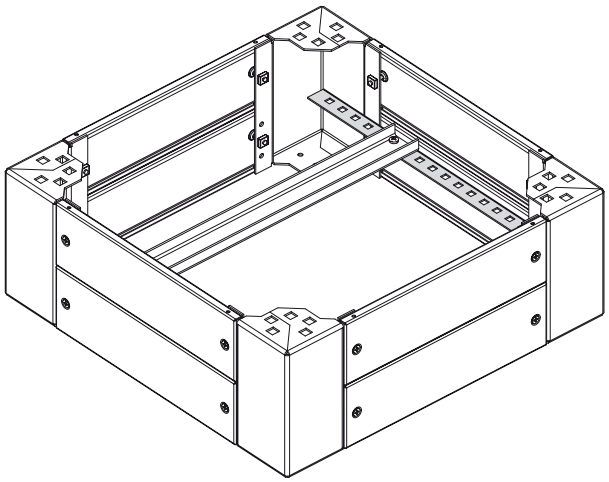

Support for cable bar

For mounting the cable bar on the 200 mm plinth.
Fixed on the interior side of the plinth.

Material:
Al-Zn coated sheet steel

Scope of delivery:
Support for cable bar without fixing accessories (fixing accessories are listed on page 301).

For cabinet depth [mm]	Length of support for cable bar [mm]	Catalogue number
800	700	WZ-1951-66-01-000
600	500	WZ-1951-66-02-000
500	400	WZ-1951-66-03-000
400	300	WZ-1951-66-04-000

Package: 1 pc.

Cable bar, cable clamps

For fixing cables with cable clamps. Cable bar is to be mounted on horizontal profile of the cabinet's frame or 200 mm plinth.

Material:
Cable bar - Al-Zn coated sheet steel
Cable clamps - zinc coated sheet steel

Scope of delivery:
Cable bar sold without fixing accessories (fixing accessories are listed on page 301).
Cable clamps should be ordered separately.

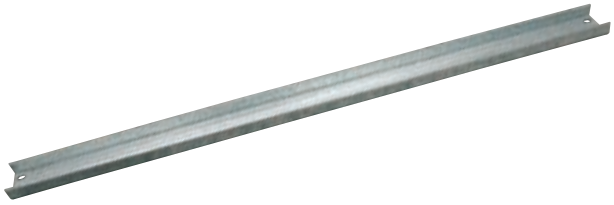

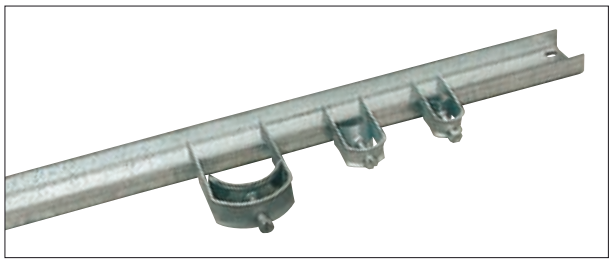

Cable clamps

For cable diameter [mm]	Catalogue number
8-12	WZ-K12U-00-00-000
12-16	WZ-K16U-00-00-000
16-20	WZ-K20U-00-00-000
20-24	WZ-K24U-00-00-000
24-28	WZ-K28U-00-00-000
28-32	WZ-K32U-00-00-000
32-36	WZ-K36U-00-00-000
36-40	WZ-K40U-00-00-000
40-44	WZ-K44U-00-00-000
44-48	WZ-K48U-00-00-000
48-52	WZ-K52U-00-00-000
52-56	WZ-K56U-00-00-000

Package: 1 pc.

Cable bar

For cabinet width [mm]	Cable bar dimensions [mm] (length x width x height)	Catalogue number
1200	1158 x 49 x 20	WZ-1951-22-01-000
1000	958 x 49 x 20	WZ-1951-22-02-000
800	758 x 49 x 20	WZ-1951-22-03-000
600	558 x 49 x 20	WZ-1951-22-04-000

Package: 1 pc.

ACCESSORIES FOR SZE2 CABINETS

EARTHING AND POTENTIAL EQUALISATION

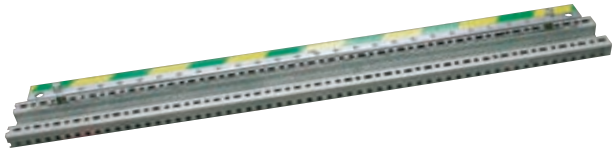

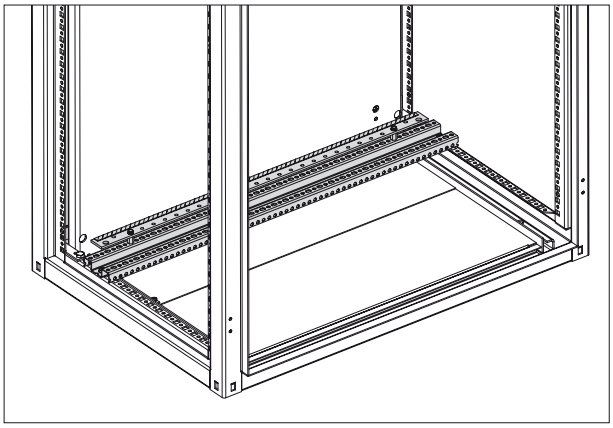

Earthing bar set

Consists of earthing bar and horizontal mounting bar UNI intended for fixing on the horizontal profiles of the cabinet's frame.
Earthing bar with threaded openings M8 for cables fixing.

Material:
Earthing bar: zinc-coated steel rail 30 x 4 mm
Mounting bar UNI: Al-Zn coated sheet steel

Scope of delivery:
Earthing bar set with fixing accessories for assembling into the cabinet.

For cabinet width [mm]	Length of mounting bar [mm]	Length of earthing bar [mm]	Catalogue number of set
1200	1162.5	1113.5	WZ-1951-24-01-000
1000	962.5	913.5	WZ-1951-24-02-000
800	762.5	713.5	WZ-1951-24-03-000
600	562.5	513.5	WZ-1951-24-04-000

Package: 1 set

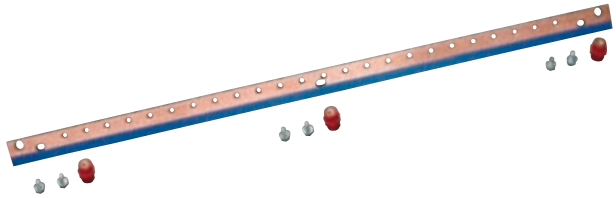

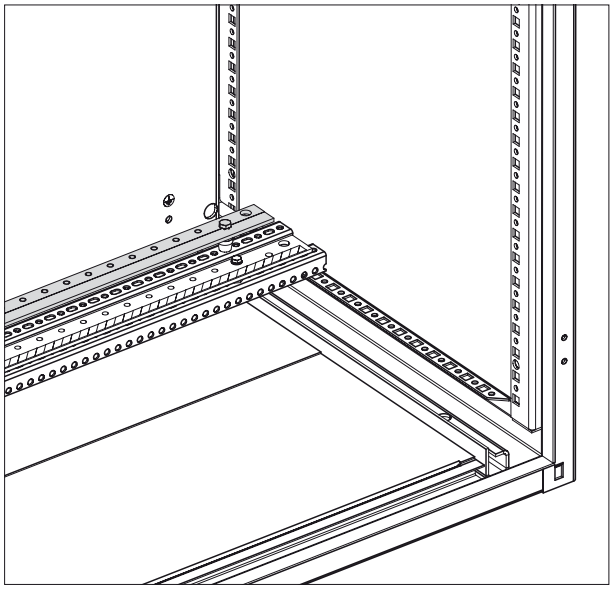

Potential equalisation bar

Fixed on the mounting bar UNI, which is the part of earthing bar set.
With threaded holes M8 for cables fixing.

Material:
Copper bar 30 x 4 mm

Scope of delivery:
Potential equalisation bar with 3 insulators and screws for fixing to the mounting bar UNI.

For cabinet width [mm]	Length of potential equalisation bar [mm]	Catalogue number
1200	1113.5	WZ-1951-25-01-000
1000	913.5	WZ-1951-25-02-000
800	713.5	WZ-1951-25-03-000
600	513.5	WZ-1951-25-04-000

Package: 1 pc.

Earthing cable set

Copper wires for making compensation protective connections between all the removable components of the cabinet, its structure, and the earthing strip. Cables are terminated with ring terminals for M8 bolts.

Material:
Copper

Scope of delivery:
Set: 9 Insulated strand, full section 6 mm^2, fixing accessories

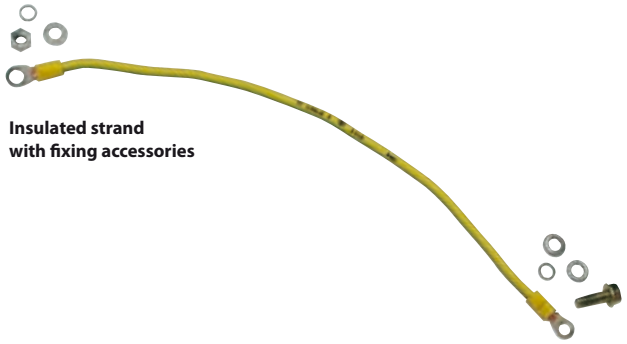

Insulated strand with fixing accessories

Package	Catalogue number
1 set.	WZ-1951-33-00-000

ACCESSORIES FOR SZE2 CABINETS

LIGHTING

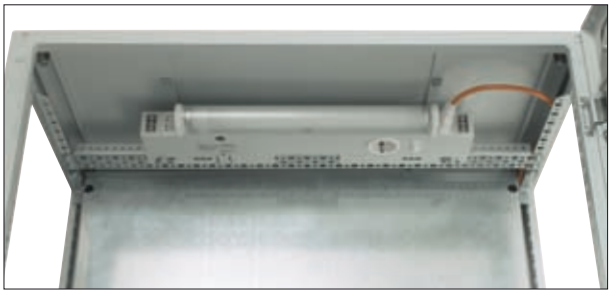

System lighting set

Fixed into the horizontal slots in the top part of the cabinet's frame using CLASSIC-type cross bar.
Equipped with a Schuko power socket and a switch.
Possibility of direct power supply or use of the connecting cable from an adjacent lighting fitting.
Possibility of door switch control.

Material:
Electric light fitting - sheet steel powder painted in RAL 7035

Scope of delivery:
Set contains: electric light fitting with a 14 W fluorescent lamp, a cross bar CLASSIC with adjusted length to the cabinet's width, fixing accessories.
Connecting cable, power supply cable and door switch set are to be ordered separately.

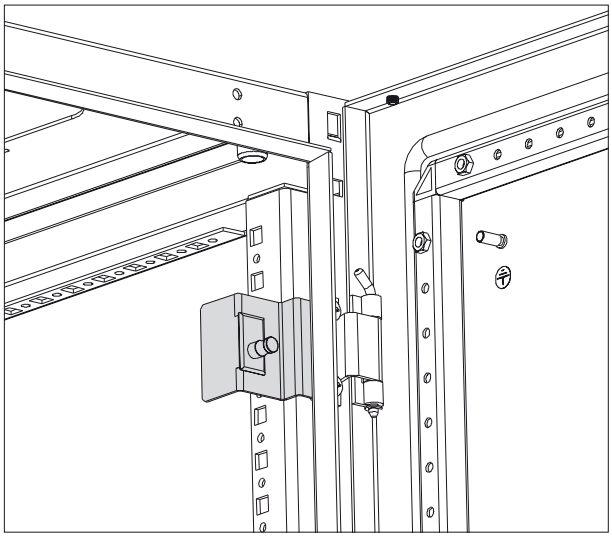

Door switch mounted in the cabinet

Product name	For cabinet width [mm]	Catalogue number
System lighting set	1200	WZ-1951-80-01-011
	1000	WZ-1951-80-02-011
	800	WZ-1951-80-03-011
	600	WZ-1951-80-04-011
Connecting cable 0.6 m	600 - 800	M1T-02-0012
Connecting cable 1.0 m	1000 - 1200	M1T-02-0011
Power supply cable 3.0 m		M1T-02-0016
Door switch set with 1.0 m cable		WN-0208-01-00-000

Package: 1 set

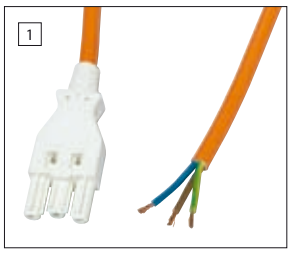

Connecting cable

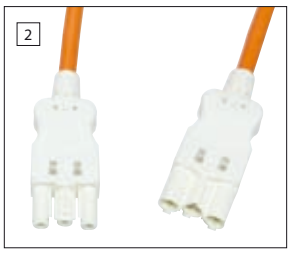

Power supply cable

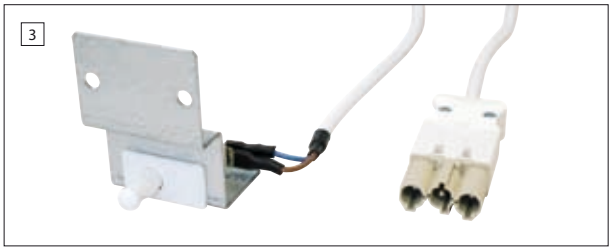

Door switch set with cable

CONNECTION DIAGRAM

1 - power supply cable, 2 - connecting cable, 3 - door switch set

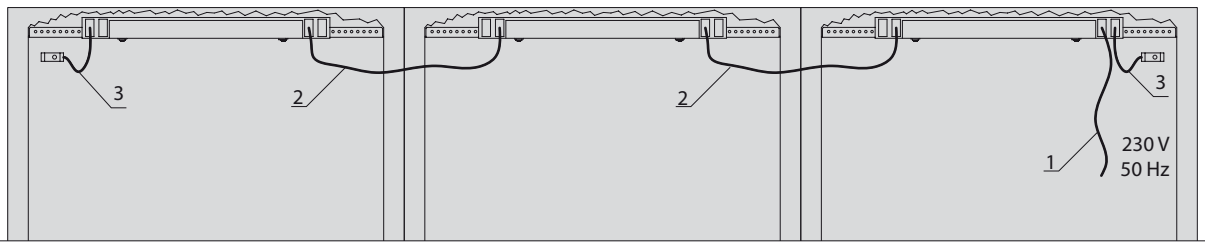

Lighting set

Fixed into horizontal slots in the top part of the cabinet's frame.

Material:
Mounting bracket - sheet steel powder painted in RAL 7035.
Mounting bar - Al-Zn coated steel (only for cabinets 1000 and 1200 mm wide).

Scope of delivery:
Set: electric light fitting with a LED lamp 230 V, 5 W and switch, a mounting bracket, a mounting rail (only for the cabinets 1000 and 1200 mm wide), a 1.6 m power supply cable and fixing accessories for mounting the set in the cabinet.
The power supply cable equipped with a door switch is to be ordered separately.

Lighting set

Product name	For cabinet width [mm]	Catalogue number
Lighting set	1200	WN-0208-05-05-011
	1000	WN-0208-05-04-011
	800	WN-0208-05-03-011
	600	WN-0208-05-02-011
Power supply cable 1.6 + 1.0 m with a door switch		WN-0208-04-04-000

Package: 1 set

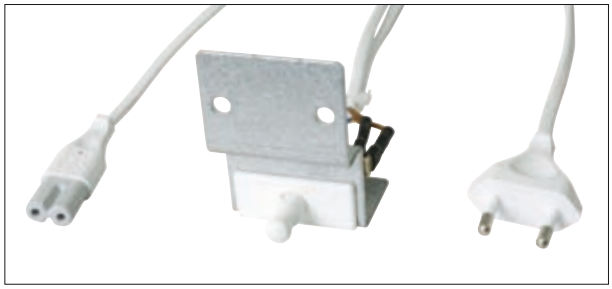

The power supply cable with a door switch that automatically switches on and off the light or other devices when the cabinet opens and closes

Door switch set

Mounted at the cabinet's door. Depending on wire connection, pressing the button closes or opens the circuit.

Scope of delivery:
Door switch, mounting bracket, 2 screws

Package	Catalogue number
1 pc.	WZ-1951-41-03-000

ACCESSORIES FOR SZE2 CABINETS

CABLE GLAND PLATES AND BLANKING PLATES

Spare kit of sliding gland plates

Spare kit of sliding gland plates with foam for cabinet's bottom plate

Intended for application instead of standard sliding gland plates.

They create a cable opening with adjustable width.

Sealing foam protects cable isolation lead into the cabinet from any defects, at the same time increasing the cabinet's tightness.

Types, dimensions and openings in the bottom plate of SZE2 cabinet – see page 280.

Material:
Al-Zn coated sheet steel, polyurethane foam

Scope of delivery:
Set of 2 sliding gland plates with sealing foam.

For cabinet width [mm]	Gland plates width [mm]	Package	Catalogue number
800	656	1 set	WZ-1951-81-01-000
1200 or 600	456	1 set	WZ-1951-81-02-000
1000	406	1 set	WZ-1951-81-03-000

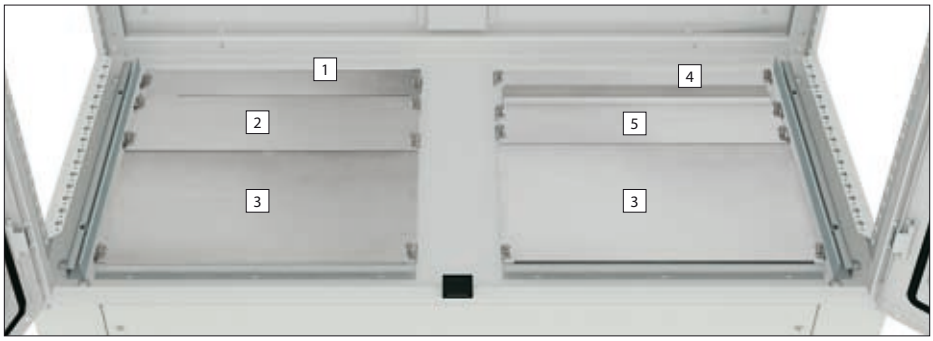

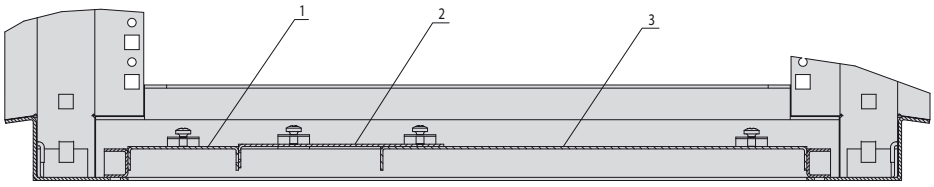

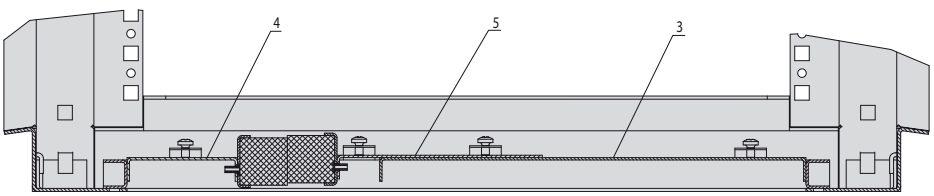

Method of fastening sliding gland plates in the bottom plate of the SZE2 cabinet

Supply of all cabinets includes:
1, 2, 3 – sliding gland plates without foam.
Supplementary accessories:
4, 5 – sliding gland plates with sealing foam intended for fastening instead of 2 standard gland plates without foam (1, 2).

Blanking and cable entry plates for cabinet's top plate

For types, dimensions and spacing of openings in the top plate of the SZE2 cabinet, see page 281.

Available in 5 types:

- Solid blanking plates with a sealing gasket
  - to ensure tight closure of the top plate
- Perforated blanking plates
  - with ventilation openings, 2.5 mm wide
- Blanking plates with a fabric filter
  - with a replaceable fabric filter insert
- Cable entry plates with a brush strip
  - 320 x 50 mm opening for cable entry
- Cable entry plates with a foam strip
  - 320 x 50 mm opening for cable entry

Material:
Sheet steel powder painted in RAL 7035.

Scope of delivery:
Blanking or cable entry plate with mounting elements for fixing inside the cabinet.

Type of blanking or cable entry plate	Protection degree of cabinets equipped with a blanking plate		For opening [mm]	Catalogue number
	Cabinet without a roof	Cabinet with a roof		
Solid blanking plate	IP 54	IP 54	380 x 380	WZ-4810-07-00-011
			380 x 210	WZ-1951-26-00-011
Perforated blanking plate	IP 20	IP 21	380 x 380	WZ-1718-39-01-011
			380 x 210	WZ-1718-39-02-011
Blanking plate with a fabric filter	IP 10	IP 21	380 x 380	WZ-1718-42-01-011
			380 x 210	WZ-1718-42-02-011
Cable entry plate with a brush strip	IP 10	IP 21	380 x 380	WZ-1718-37-01-011
			380 x 210	WZ-1718-37-02-011
Cable entry plate with a foam strip	IP 10	IP 21	380 x 380	WZ-1718-40-01-011
			380 x 210	WZ-1718-40-02-011

Package: 1 set

Solid blanking plates

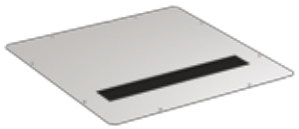

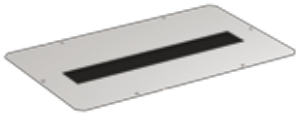

Cable entry plates with a brush strip

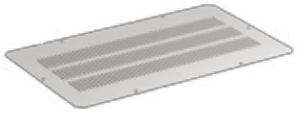

Perforated blanking plates

Blanking plates with a fabric filter

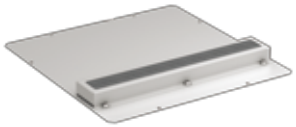

Cable entry plates with a foam strip

ACCESSORIES FOR SZE2 CABINETS

BAYING CABINETS IN ROWS

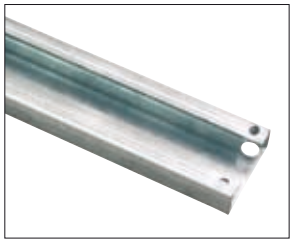

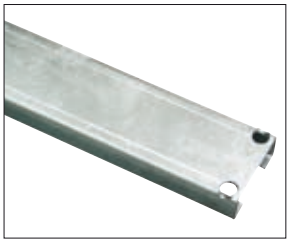

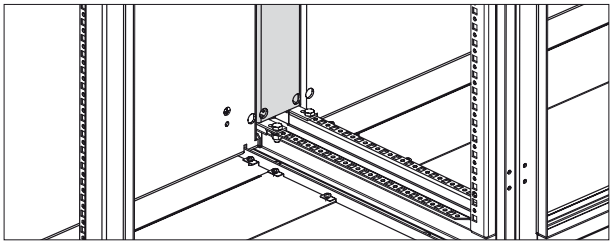

Mounting plate infill

The plate infill makes it possible to achieve uniform mounting plane in cabinets bayed in rows.

Material:
Zinc coated sheet steel

Scope of delivery:
Mounting plate infill with fixing accessories for mounting into the cabinet.

For cabinet height [mm]	Mounting plate infill dimensions [mm] (HxWxD)	Catalogue number
2000	1867 x 86 x 30	WZ-1951-47-01-000
1800	1667 x 86 x 30	WZ-1951-47-02-000

Package: 1 pc.

Partition

For the cabinets bayed in rows. It is assembled in the same way as flushed side panels (see page 289).

Material:
Al-Zn coated sheet steel

Scope of delivery:
Partition (1 pc.) with fixing accessories for mounting into the cabinet.

For cabinet		Catalogue number
height [mm]	depth [mm]	
2000	800	WZ-1951-31-01-000
	600	WZ-1951-31-02-000
	500	WZ-1951-31-03-000
	400	WZ-1951-31-13-000
1800	600	WZ-1951-31-05-000
	500	WZ-1951-31-06-000

Package: 1 pc.

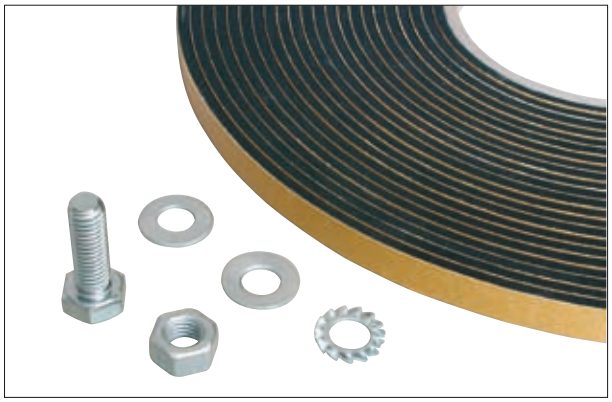

Set of elements for baying cabinets

For cabinets bayed in rows.
One set is required for baying two cabinets together.

Set includes		Catalogue number
Screw M8x25	6 pcs.	WZ-1951-45-00-000
Nut M8	6 pcs.	
Washer 8.4	12 pcs.	
Toothed washer 8.4	6 pcs.	
Self-adhesive gasket	6 m	

Package: 1 set

Heater

Compact heat device equipped with fan.

Technical data:

- Power supply ..... 230 V AC 50-60 Hz
- Heating force .... 200/300/400 W
- Fan capacity ..... 10 m^3 /h
- Protection degree .....IP 20
- Dimensions ..... 71x70x96,5 mm

Features:

- 3 power ranges depending on how connect the power cord,
- independent power supply circuit of the fan.

Scope of delivery:

- heater,
- DIN rail,
- two holders,
- screw clamps for connecting power cords.

Package	Catalogue number
1 pc.	WN-0316-09-00

Thermostat

Thermostatic regulator indicated for controlling fans, heaters, heat exchanger or for attaching signal generator at exceeding preset temperature limits.

Technical data:

- Sensor element:
  thermal bimetal
- Temperature range:
  0-60 °C, hysteresis ca. 7 °C
- Contact types:
  snap action contact
- Power carrying capacity:
  6 A (1) 250 V AC
- Radio frequency interference:
  N (according to VDE 0875)

Scope of delivery:

- KTS 1141 or KTO 1140 thermostat,
- DIN rail,
- two holders,
- two screw clamps.

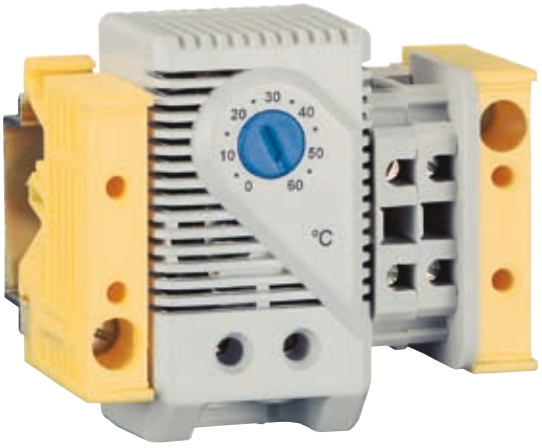

KTS 1141 - thermostat normally open

Type of thermostat	Colour of handwheel	Package	Catalogue number
KTO 1140 – normally closed Switches off devices (e.g. eaters) at selected temperature limit.	●	1 pc.	WN-0201-01-00-000/A
KTS 1141 – normally open Switches on ventilation system (e.g. fans) at selected temperature limit.	●	1 pc.	WN-0201-02-00-000/A

ACCESSORIES FOR SZE2 CABINETS

VENTILATING, COOLING AND HEATING

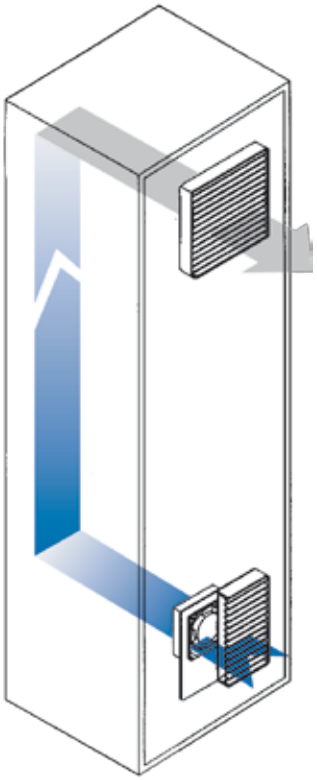

Example of ventilation of the cabinet with forced air circulation

Filter fans and exhaust filters

- Intended for mounting in side panels and door of the cabinet.
- Fastened with latches and screws.
- Enclosure made of ABS material, light grey (RAL 7035).
- Equipped with high quality filter inserts and gaskets.
- Possibility of changing direction of air flow by turning the fan.

Type of fan supply:
230 V AC (50/60 Hz),
On request: 115 V AC (50/60 Hz) or 24 V DC

Protection degree:
IP 54 in accordance with EN 60529

Selection of filter fans and exhaust filters should be consulted with ZPAS customer service.

FILTER FANS

Type	Air flow through filter fan [m³/h]		Dimensions [mm]		Catalogue number
	without filter	with filter	montage opening	overall dimensions	
LV100	25	15	92 x 92	105 x 105	M1S-01-0026
LV200	58	40	116 x 116	130 x 130	M1S-01-0043
LV250	63	42	125 x 125	148 x 148	M1S-01-0074
LV300	115	90	177 x 177	204 x 204	M1S-00-0010
LV400	250	205	223 x 223	250 x 250	M1S-00-0011
LV410	250	205	223 x 223	250 x 250	M1S-01-0070
LV500	315	235	223 x 223	250 x 250	M1S-01-0066
LV550	370	260	223 x 223	250 x 250	M1S-00-0055
LV600	580	385	292 x 292	323 x 323	M1S-01-0067
LV700	730	530	292 x 292	323 x 323	M1S-00-0045
LV800	930	610	292 x 292	323 x 323	M1S-01-0104

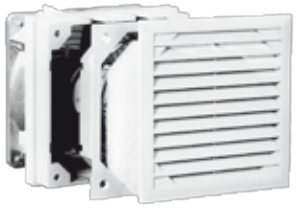

Example of filter fans

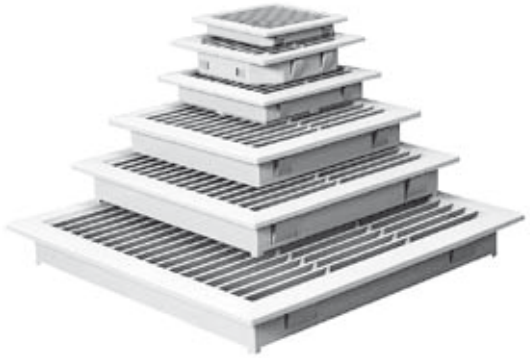

Exhaust filter

EXHAUST FILTER

Type	Dimensions [mm]		Catalogue number
	montage opening	overall dimensions	
GV100	92 x 92	105 x 105	M1S-03-0007
GV200	116 x 116	130 x 130	M1S-03-0023
GV250	125 x 125	148 x 148	M1S-03-0030
GV300	177 x 177	204 x 204	M1S-03-0010
GV400/500	223 x 223	250 x 250	M1S-03-0011
GV600/700	292 x 292	323 x 323	M1S-03-0031

Air conditioner and heat exchanger

On customer's request, SZE2 cabinets can be equipped with an air conditioner or heat exchanger (air/air type) fixed on the doors, side panels or in the top plate.

Mode of operation:
Internal cabinet air is sucked up from the top, cooled inside the air conditioner or heat exchanger and returned the cabinet at a high speed towards the bottom. This solution ensures optimum cooling of the entire cabinet.

Protection degree:
Air conditioners and heat exchangers in standard ZPAS offer have IP 54 protection degree.

Heat exchangers

AVAILABLE TYPES OF AIR CONDITIONERS

Side/door-mounted

PROTHERM
- basic series of air conditioners
- 330-4000 W cooling power
- designed for mounting on cabinet side panel or door

SLIM
- for applications where flat air conditioner is required
- 500-3000 W cooling power
- designed for mounting on cabinet side panel or on cabinet door

OUTDOOR
- for use outdoors
- 850-4000 W cooling power
- two mounting options: outside or inside a cabinet
- optional built-in heater

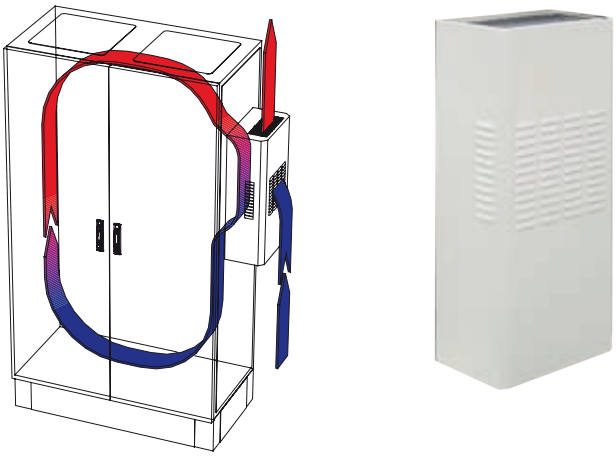

Air conditioner fixed on cabinet's side panel

Roof-mounted

TOP
- mounted on cabinet roof
- 330-5200 W cooling power
- most models equipped with triple condensate protection system

Modular

MODULE
- for cabinet sets, mounted on the side of a cabinet with a depth 600 or 800 mm
- 5800-10000 W cooling power
- all models with electronic control

Selection of the air conditioner or heat exchanger should be consulted with ZPAS customer service.

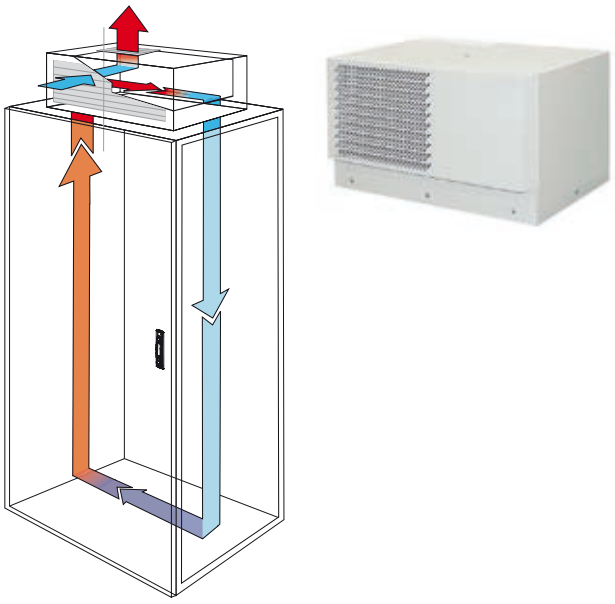

Air conditioner fixed on cabinet's top plate

ACCESSORIES FOR SZE2 CABINETS

MODULAR SYSTEM

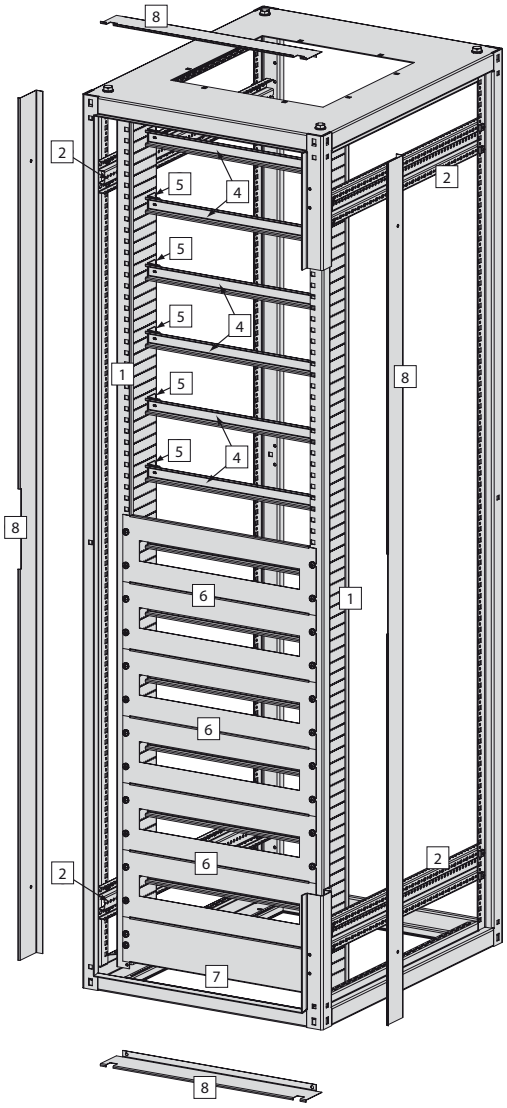

ZPAS Modular System

ZPAS Modular System is intended for designing switchgears based on SZE2 power cabinets. Modular equipment is installed on dedicated structure.

Basic elements:

1. Mounting profiles II (see page 315)
2. Mounting bar UNI (see pages 315, 300)
3. Fixing accessories set (see page 315)
4. DIN rail (see page 316)
5. Assembly angles (see page 316)
6. Module panels 150 (see page 316)
7. Module blanking plates 150, 100, 50 (see page 317)
8. Horizontal and vertical module panels (see page 317)

Switchgears based on this design are featured with IP 30 safeto-touch (for live parts) protection degree. Once closed, SZE2 cabinets are IP 54 protected.

Each switchgear based on SZE2 cabinets is subdivided into bay height modules (BHM). Each module is 150 mm high.

Normally, switchgears equipped with a rail system are composed of 3 mounting zones:

- busbar system zone (3 BHMs),
- apparatus assembly zone (8 BHMs in case of the cabinets 2000 mm high),
- cable entry zone (1 BHMs + 100 mm).

With such a switchgear construction, the cabinets with the below listed dimensions (height x width) can contain the below listed number of modules of modular equipment:
cabinet 2000 mm x 600 mm – 288 modules (18 mm);
cabinet 2000 mm x 800 mm – 432 modules;
cabinet 2000 mm x 1000 mm and 2000 mm x 1200 mm – 576 modules, respectively.

Mounting profiles II

Mounting profiles are a racking system, and the other components of modular equipment installation sets (i.e. module panels, assembly angles and DIN rails) are attached to this system. The rail location can be smoothly adjusted with reference to the cabinet width.

Material:
Al-Zn coated sheet steel

Scope of delivery:
Mounting profile without fixing accessories (to be ordered separately).

For cabinet height [mm]	Capacity of mounting profile II*	Catalogue number
2000	12	WZ-4881-67-02-000
1800	11	WZ-4881-67-01-000

Package: 2 pc.

* Maximum number of built-in DIN rails

Mounting bars UNI

Four mounting bars UNI, whose length is matched to the cabinet depth, are necessary to install mounting profiles II inside SZE2 cabinet.

A detailed description of the mounting bars UNI can be found on the page 300.

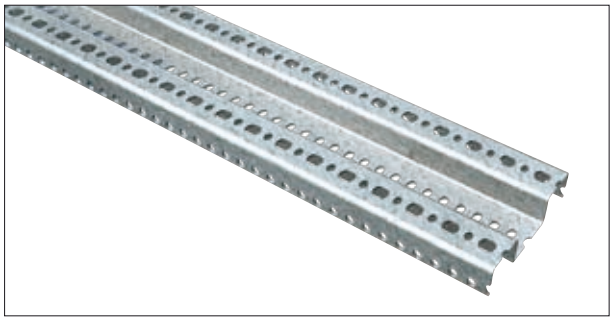

Mounting profile II fixing elements

A set of fixing accessories for fastening 2 pcs. mounting profiles II to mounting bars UNI.

Description of set	Package	Catalogue number
Screw M6x16 - 4 pc. Nut M6 - 4 pc. Washer - 8 pcs Toothed washer - 4 pc.	1 set.	WZ-SB00-37-04-000

ACCESSORIES FOR SZE2 CABINETS

MODULAR SYSTEM

DIN rail

The rail is intended for the installation of modular equipment.
Rail depth: 15 mm

Note: In case of cabinets 1000 and 1200 mm wide, heavy modular equipment can be installed differently. For more information, please contact ZPAS sales department.

Material:
Galvanized steel sheet

Scope of delivery:
DIN rail without fixing accessories.

For cabinet width [mm]	Catalogue number
1200	WZ-0573-52-21-000
1000	WZ-0573-52-22-000
800	WZ-0573-52-23-000
600	WZ-0573-52-24-000

Package: 1 pc.

Assembly angles

These angles are used for fixing DIN rails with the mounting profile II. Two angles are necessary to fix one rail.

Material:
Al-Zn coated sheet steel

Scope of delivery:
An angle (1 pc.) with fixing accessories to fix it to the mounting profile II and the DIN rail.

Package	Catalogue number
1 pc.	WZ-0573-52-30-000

Module panel 150

Module panels are fixed directly to the mounting profiles II. 150 mm high, the module panels are intended for hiding modular equipment installed on the DIN mounting rail.

Material:
Powder painted RAL 7035 steel sheet.

Scope of delivery:
Module panel with fixing accessories.

For cabinet width [mm]	Module panel capacity (number of S-type modules, 18 mm wide)	Catalogue number
1200	48	WZ-4881-68-04-011
1000	48	WZ-4881-68-03-011
800	36	WZ-4881-68-02-011
600	24	WZ-4881-68-01-011

Package: 1 pc.

Module blanking plates 150, 100, 50

These module blanking plates are used to fill free space left after modular equipment has been installed in the cabinet.

Depending on the cabinet height, it is necessary to use a blanking plate, other than the one 150 mm high:
- cabinet 1800 mm high – blanking plate 50 mm
- cabinet 2000 mm high – blanking plate 100 mm

Material:
Powder painted RAL 7035 steel sheet.

Scope of delivery:
Module panel with fixing accessories.

For cabinet width [mm]	Catalogue number		
	Module blanking plate 150 mm high	Module blanking plate 100 mm high	Module blanking plate 50 mm high
1200	WZ-4881-68-08-011	WZ-4881-71-04-011	WZ-4881-72-04-011
1000	WZ-4881-68-07-011	WZ-4881-71-03-011	WZ-4881-72-03-011
800	WZ-4881-68-06-011	WZ-4881-71-02-011	WZ-4881-72-02-011
600	WZ-4881-68-05-011	WZ-4881-71-01-011	WZ-4881-72-01-011

Package: 1 pc.

Horizontal and vertical module panels

These panels are intended to protect horizontal and vertical space between mounting profiles II and cabinet frame.

Material:
Powder painted RAL 7035 steel sheet

Scope of delivery:
Horizontal or vertical module panel with fixing accessories.

Product name		Catalogue number
Vertical module blanking plate for the cabinets height	2000 mm	WZ-4881-69-02-011
	1800 mm	WZ-4881-69-01-011
Horizontal module blanking plate for the cabinets width	1200 mm	WZ-4881-70-04-011
	1000 mm	WZ-4881-70-03-011
	800 mm	WZ-4881-70-02-011
	600 mm	WZ-4881-70-01-011

Package: 1 pc.

SZE3 CABINETS

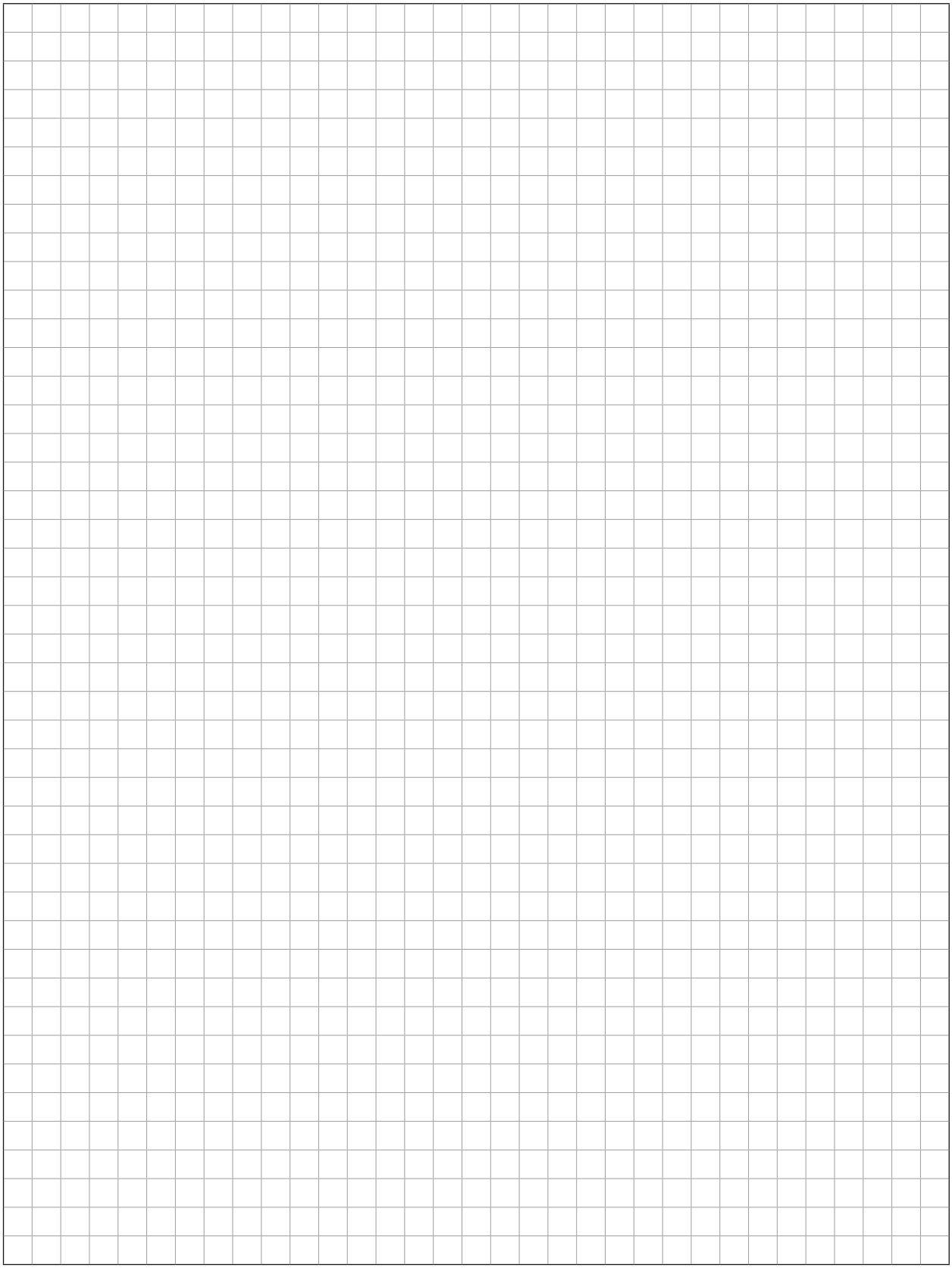

SZE3 CABINETS

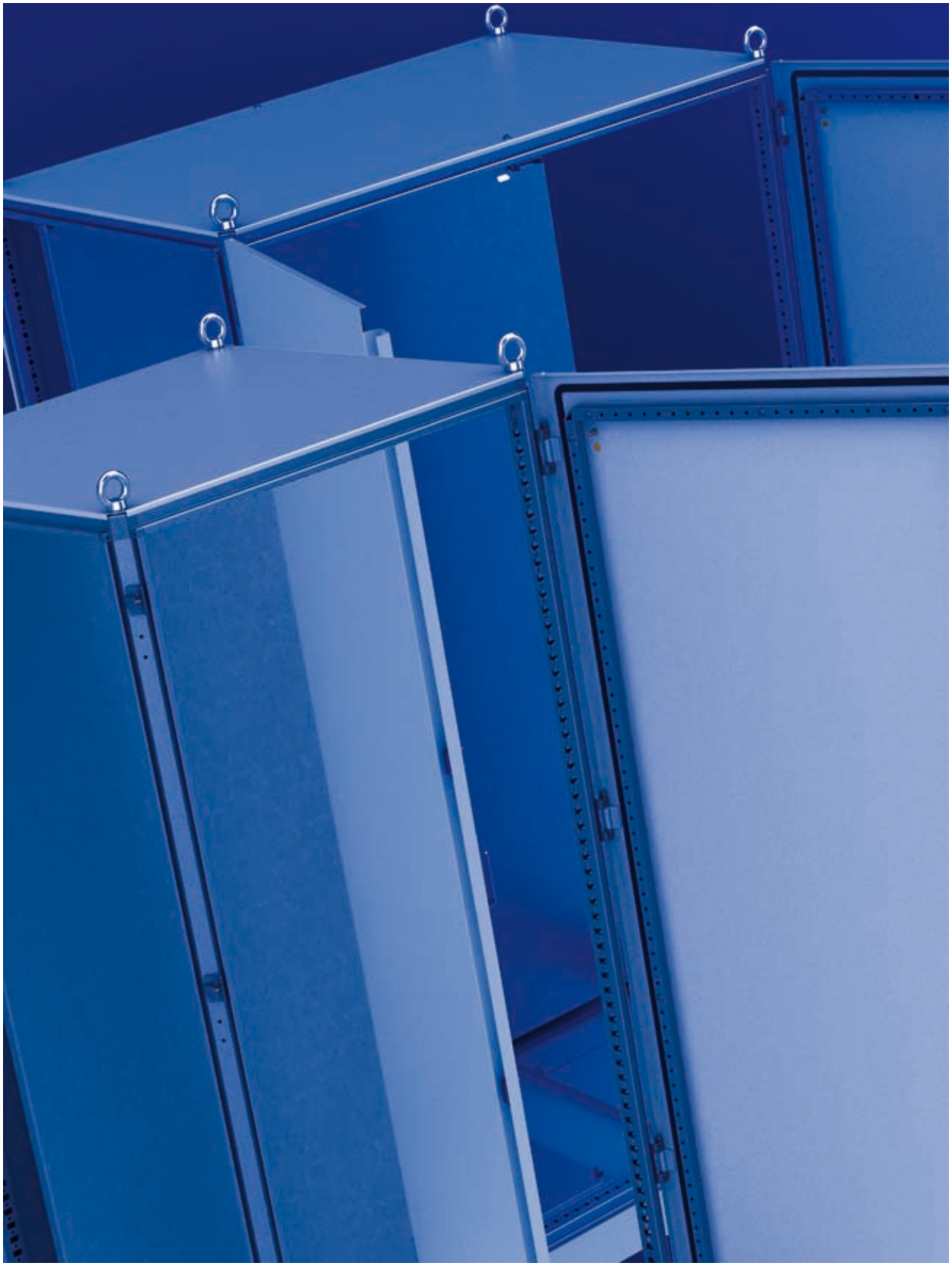

SZE3 MODULAR CABINETS

Versatile bolted enclosure for indoor applications both in automation and power industry, for installing various devices on a mounting plate or an internal rack.
The cabinet has a frame structure, based on closed profiles, perforated in two planes. This gives unlimited possibilities for interior installation and allows to easily connect cabinets in series.
SZE3 cabinet comes in 48 varieties of sizes. For more information please contact our Sales Department to choose the suitable for your need. Other untypical dimensions are also possible.
SZE3 cabinets are also available in a version suitable for outdoor applications (special painting), or in stainless steel.

CHART OF STANDARD CABINET DIMENSIONS

	Total width of the cabinet [mm]	Total depth of the cabinet [mm]	Height of the cabinet without plinth [mm]		
			1800	2000	2200
			Catalogue numbers of cabinets		
Cabinets with single-wing door	600	400	WZ-6282-01-48-011	WZ-6282-01-32-011	WZ-6282-01-16-011
		500	WZ-6282-01-47-011	WZ-6282-01-31-011	WZ-6282-01-15-011
		600	WZ-6282-01-46-011	WZ-6282-01-30-011	WZ-6282-01-14-011
		800	WZ-6282-01-45-011	WZ-6282-01-29-011	WZ-6282-01-13-011
	800	400	WZ-6282-01-44-011	WZ-6282-01-28-011	WZ-6282-01-12-011
		500	WZ-6282-01-43-011	WZ-6282-01-27-011	WZ-6282-01-11-011
		600	WZ-6282-01-42-011	WZ-6282-01-26-011	WZ-6282-01-10-011
		800	WZ-6282-01-41-011	WZ-6282-01-25-011	WZ-6282-01-09-011
Cabinets with double-wing door	1000	400	WZ-6282-01-40-011	WZ-6282-01-24-011	WZ-6282-01-08-011
		500	WZ-6282-01-39-011	WZ-6282-01-23-011	WZ-6282-01-07-011
		600	WZ-6282-01-38-011	WZ-6282-01-22-011	WZ-6282-01-06-011
		800	WZ-6282-01-37-011	WZ-6282-01-21-011	WZ-6282-01-05-011
	1200	400	WZ-6282-01-36-011	WZ-6282-01-20-011	WZ-6282-01-04-011
		500	WZ-6282-01-35-011	WZ-6282-01-19-011	WZ-6282-01-03-011
		600	WZ-6282-01-34-011	WZ-6282-01-18-011	WZ-6282-01-02-011
		800	WZ-6282-01-33-011	WZ-6282-01-17-011	WZ-6282-01-01-011

Cabinet 800 mm wide including 19" swing frame

Cabinet 800 mm wide including mounting plate, without side panels

TECHNICAL DATA

Standard compliance:
Cabinets are made in accordance with PN-EN 62208 standard
Protection degree enclosures: **IP 55** compliant with PN-EN 60529

Material and surface finishing:
Cabinet's frame - galvanized steel sheet
Doors, panels, plinth - steel sheet powder painted in RAL 7035 (epoxide-polyester paint of coarse-grained structure, applied for internal conditions). On customer's request, it is possible to use special paint with increased resistance to adverse weather conditions and using polyzinc base.
Mounting plate, swing frame - galvanized steel sheet and profiles
Mounting bars - aluzinc steel sheet
SZE3 cabinets and accessories can be made of stainless steel.

SCOPE OF DELIVERY

Cabinet in basic configuration includes: cabinet's frame, front door with a lock that incl. double-bit insert (no handle), rear panel, mounting plate for the full height of the cabinet, top panel, set of sliding gland plates for cabinet's bottom plate. Side panels, plinth, lifting eyes, swing frame and other supplementary accessories should be ordered separately.

MODULAR CABINETS SZE3

CABINET DESIGN

Screwed framework of the cabinet
Closed-profile bolted design for high rigidity. Shape of the profiles ensures full symmetry of the cabinet frame, allowing doors and panels to be installed on either side plane. Each profile has a perforation with pitch of 25 mm on two planes, which makes the interior highly configurable.
The material used gives increased corrosion resistance and simple galvanic connection of unpainted parts that are attached directly to the frame. In this way there is a possibility to avoid any additional ground connections.
The perforation is designed for M6 self-tapping screws and special M8 cage nuts.
The perforation modular arrangement in the cabinet frame is compliant with the EN 60917 standard.

Door
Door is made of steel sheet powder coated in RAL 7035. The door can be mounted to the frame at any plane, on four hinges with an opening angle of 150°. With its symmetric design, the door can be mounted for either left or right handing. The door comes with 25 mm perforated stiffening frame as standard.
The door has a four-point rod lock as standard. Cabinets with widths of 1000 mm and 1200 mm have a double door; cabinets with widths of 800 and 600 mm have a single leaf door. On request, we can deliver glazed and/or ventilated door, see pages 326–327.

Rear panel and side panels
Simple and quick installation with screws. Due to the frame symmetry, for cabinets of the same width and depth they may be used interchangeably. Rear and side panels are made of steel sheet powder-coated in standard RAL 7035. They have M8 earthing bolts as standard.

Top panel
Full metal blanking plate powder-coated in RAL 7035 with a cast seal.

Bottom plate
Perforated plate with 3 sliding blanking plates (the same as in SZE2 cabinet). The blanking plates are fixed with special cut-in screws that ensure continuity of equipotential bonding (earthing).
Bottom plate and the blanking plates can be removed to achieve a cable grommet virtually as large as the cabinet base.

Mounting plate
The cabinet is fitted with a galvanized mounting plate with a thickness of 3 mm as standard. It can be mounted at any depth of the cabinet. What's important, the mounting plate can be installed as far as the cabinet's back between the rear posts of the frame, all the mounting space in the cabinet can be used completely.
The mounting plate is fitted with guides for easy installation in the cabinet, as standard.

Earthing
All the necessary elements have M8 bolts for earthing them to anywhere in the cabinet frame.

SZE3 MODULAR CABINETS

SZE2 cabinet 800 mm wide, without side panels, intended for baying in rows

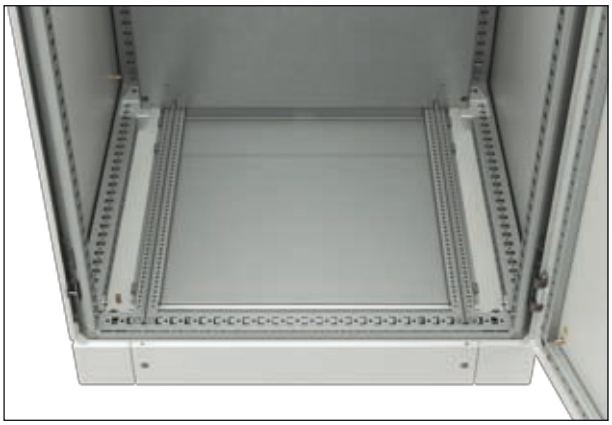

REFERENCE CHART - cabinets with a width of W = 600 mm

Dimensions of cabinet's frame [mm]	Height H	1800					
	Width W	600	600	600	600	600	
	Depth D	400	500	600	800	400	
Dimensions of mounting plate [mm]	Height HP	1721	1721	1721	1721	1921	
	Width WP	496	496	496	496	496	

		Package	Catalogue numbers				
SZE3 cabinet*		1 pc.	WZ-6282-01-48-011	WZ-6282-01-47-011	WZ-6282-01-46-011	WZ-6282-01-45-011	WZ-6282-01-32-011
Supplementary accessories**	Side panels	2 pc.	WZ-6282-18-12-011	WZ-6282-18-11-011	WZ-6282-18-10-011	WZ-6282-18-09-011	WZ-6282-18-08-011
	Mounting plates infill	1 pc.	WZ-6282-24-03-000	WZ-6282-24-03-000	WZ-6282-24-03-000	WZ-6282-24-03-000	WZ-6282-24-02-000
	19" symmetrical swing frame	1 pc.	–	–	–	–	–
	Earthing bar	1 pc.	WZ-6282-78-04-000	WZ-6282-78-04-000	WZ-6282-78-04-000	WZ-6282-78-04-000	WZ-6282-78-04-000
	Potential equalisation bar	1 pc.	WZ-6282-79-04-000	WZ-6282-79-04-000	WZ-6282-79-04-000	WZ-6282-79-04-000	WZ-6282-79-04-000

REFERENCE CHART - cabinets with a width of W = 800 mm

Dimensions of cabinet's frame [mm]	Height H	1800					
	Width W	800	800	800	800	800	
	Depth D	400	500	600	800	400	
Dimensions of mounting plate [mm]	Height HP	1721	1721	1721	1721	1921	
	Width WP	696	696	696	696	696	

		Package	Catalogue numbers				
SZE3 cabinet*		1 pc.	WZ-6282-01-44-011	WZ-6282-01-43-011	WZ-6282-01-42-011	WZ-6282-01-41-011	WZ-6282-01-28-011
Supplementary accessories**	Side panels	2 pc.	WZ-6282-18-12-011	WZ-6282-18-11-011	WZ-6282-18-10-011	WZ-6282-18-09-011	WZ-6282-18-08-011
	Mounting plates infill	1 pc.	WZ-6282-24-03-000	WZ-6282-24-03-000	WZ-6282-24-03-000	WZ-6282-24-03-000	WZ-6282-24-02-000
	19" symmetrical swing frame	1 pc.	WZ-6282-63-03-C08	WZ-6282-63-03-C08	WZ-6282-63-03-C08	WZ-6282-63-03-C08	WZ-6282-63-02-C08
	Earthing bar	1 pc.	WZ-6282-78-03-000	WZ-6282-78-03-000	WZ-6282-78-03-000	WZ-6282-78-03-000	WZ-6282-78-03-000
	Potential equalisation bar	1 pc.	WZ-6282-79-03-000	WZ-6282-79-03-000	WZ-6282-79-03-000	WZ-6282-79-03-000	WZ-6282-79-03-000

*) **SZE2 cabinet - scope of delivery:** cabinet's frame, front door with a lock that incl. double-bit insert (no handle), rear panel, mounting plate for the full height of the cabinet, top panel, set of sliding gland plates for cabinet's bottom plate. Side panels, plinth, lifting eyes and other supplementary accessories should be ordered separately.

) **Detailed list of supplementary accessories: pages 326-338.

MODULAR CABINETS SZE3

Side view
(cabinet with side panel)

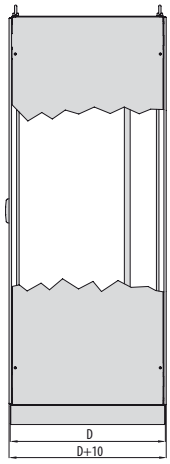

Front view
(cabinet with single-wing door)

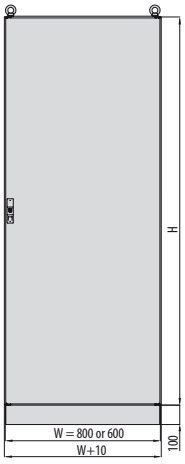

Top view

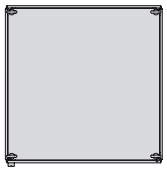

Side view
(cabinet without side panels)

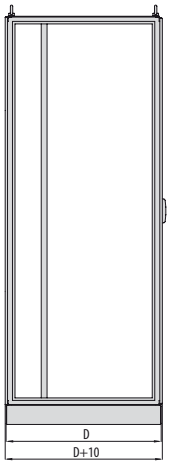

Mounting plate

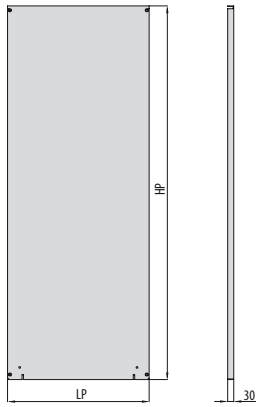

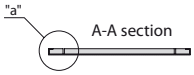

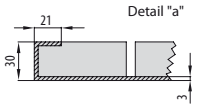

2000			2200			
600	600	600	600	600	600	600
500	600	800	400	500	600	800
1921	1921	1921	2121	2121	2121	2121
496	496	496	496	496	496	496
WZ-6282-01-31-011	WZ-6282-01-30-011	WZ-6282-01-29-011	WZ-6282-01-16-011	WZ-6282-01-15-011	WZ-6282-01-14-011	WZ-6282-01-13-011
WZ-6282-18-07-011	WZ-6282-18-06-011	WZ-6282-18-05-011	WZ-6282-18-04-011	WZ-6282-18-03-011	WZ-6282-18-02-011	WZ-6282-18-01-011
WZ-6282-24-02-000	WZ-6282-24-02-000	WZ-6282-24-02-000	WZ-6282-24-01-000	WZ-6282-24-01-000	WZ-6282-24-01-000	WZ-6282-24-01-000
–	–	–	–	–	–	–
WZ-6282-78-04-000	WZ-6282-78-04-000	WZ-6282-78-04-000	WZ-6282-78-04-000	WZ-6282-78-04-000	WZ-6282-78-04-000	WZ-6282-78-04-000
WZ-6282-79-04-000	WZ-6282-79-04-000	WZ-6282-79-04-000	WZ-6282-79-04-000	WZ-6282-79-04-000	WZ-6282-79-04-000	WZ-6282-79-04-000

2000			2200			
800	800	800	800	800	800	800
500	600	800	400	500	600	800
1921	1921	1921	2121	2121	2121	2121
696	696	696	696	696	696	696
WZ-6282-01-27-011	WZ-6282-01-26-011	WZ-6282-01-25-011	WZ-6282-01-12-011	WZ-6282-01-11-011	WZ-6282-01-10-011	WZ-6282-01-09-011
WZ-6282-18-07-011	WZ-6282-18-06-011	WZ-6282-18-05-011	WZ-6282-18-04-011	WZ-6282-18-03-011	WZ-6282-18-02-011	WZ-6282-18-01-011
WZ-6282-24-02-000	WZ-6282-24-02-000	WZ-6282-24-02-000	WZ-6282-24-01-000	WZ-6282-24-01-000	WZ-6282-24-01-000	WZ-6282-24-01-000
WZ-6282-63-02-C08	WZ-6282-63-02-C08	WZ-6282-63-02-C08	WZ-6282-63-01-C08	WZ-6282-63-01-C08	WZ-6282-63-01-C08	WZ-6282-63-01-C08
WZ-6282-78-03-000	WZ-6282-78-03-000	WZ-6282-78-03-000	WZ-6282-78-03-000	WZ-6282-78-03-000	WZ-6282-78-03-000	WZ-6282-78-03-000
WZ-6282-79-03-000	WZ-6282-79-03-000	WZ-6282-79-03-000	WZ-6282-79-03-000	WZ-6282-79-03-000	WZ-6282-79-03-000	WZ-6282-79-03-000

SZE3 MODULAR CABINETS

SZE2 cabinet 1200 mm wide, without side panels, intended for baying in rows

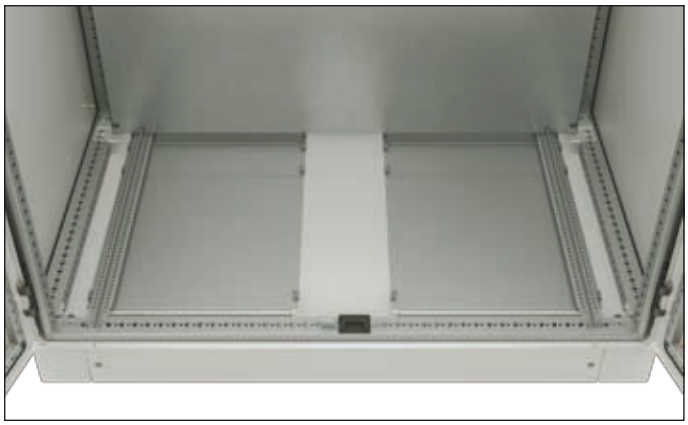

REFERENCE CHART - cabinets with a width of W = 1000 mm

Dimensions of cabinet's frame [mm]	Height H	1800					
	Width W	1000	1000	1000	1000	1000	
	Depth D	400	500	600	800	400	
Dimensions of mounting plate [mm]	Height HP	1721	1721	1721	1721	1921	
	Width WP	896	896	896	896	896	

		Package	Catalogue numbers				
SZE3 cabinet*		1 pc.	WZ-6282-01-40-011	WZ-6282-01-39-011	WZ-6282-01-38-011	WZ-6282-01-37-011	WZ-6282-01-24-011
Supplementary accessories**	Side panels	2 pc.	WZ-6282-18-12-011	WZ-6282-18-11-011	WZ-6282-18-10-011	WZ-6282-18-09-011	WZ-6282-18-08-011
	Mounting plates infill	1 pc.	WZ-6282-24-03-000	WZ-6282-24-03-000	WZ-6282-24-03-000	WZ-6282-24-03-000	WZ-6282-24-02-000
	19" symmetrical swing frame	1 pc.	–	–	–	–	–
	Earthing bar	1 pc.	WZ-6282-78-02-000	WZ-6282-78-02-000	WZ-6282-78-02-000	WZ-6282-78-02-000	WZ-6282-78-02-000
	Potential equalisation bar	1 pc.	WZ-6282-79-02-000	WZ-6282-79-02-000	WZ-6282-79-02-000	WZ-6282-79-02-000	WZ-6282-79-02-000

REFERENCE CHART - cabinets with a width of W = 1200 mm

Dimensions of cabinet's frame [mm]	Height H	1800					
	Width W	1200	1200	1200	1200	1200	
	Depth D	400	500	600	800	400	
Dimensions of mounting plate [mm]	Height HP	1721	1721	1721	1721	1921	
	Width WP	1096	1096	1096	1096	1096	

		Package	Catalogue numbers				
SZE3 cabinet*		1 pc.	WZ-6282-01-36-011	WZ-6282-01-35-011	WZ-6282-01-34-011	WZ-6282-01-33-011	WZ-6282-01-20-011
Supplementary accessories**	Side panels	2 pc.	WZ-6282-18-12-011	WZ-6282-18-11-011	WZ-6282-18-10-011	WZ-6282-18-09-011	WZ-6282-18-08-011
	Mounting plates infill	1 pc.	WZ-6282-24-03-000	WZ-6282-24-03-000	WZ-6282-24-03-000	WZ-6282-24-03-000	WZ-6282-24-02-000
	19" symmetrical swing frame	1 pc.	–	–	–	–	–
	Earthing bar	1 pc.	WZ-6282-78-01-000	WZ-6282-78-01-000	WZ-6282-78-01-000	WZ-6282-78-01-000	WZ-6282-78-01-000
	Potential equalisation bar	1 pc.	WZ-6282-79-01-000	WZ-6282-79-01-000	WZ-6282-79-01-000	WZ-6282-79-01-000	WZ-6282-79-01-000

*) **SZE2 cabinet - scope of delivery:** cabinet's frame, front door with a lock that incl. double-bit insert (no handle), rear panel, mounting plate for the full height of the cabinet, top panel, set of sliding gland plates for cabinet's bottom plate. Side panels, plinth, lifting eyes and other supplementary accessories should be ordered separately.

) **Detailed list of supplementary accessories: pages 326-338.

MODULAR CABINETS SZE3

Side view
(cabinet with side panel)

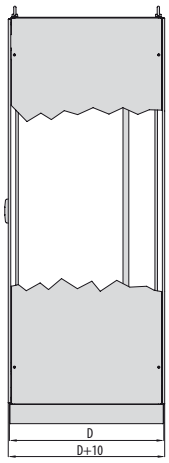

Front view
(cabinet with double-wing door)

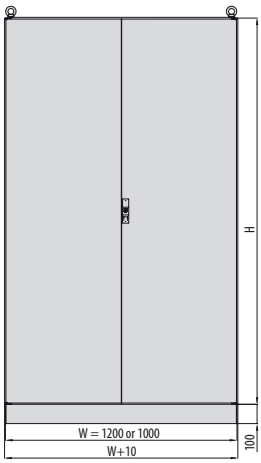

Side view
(cabinet without side panels)

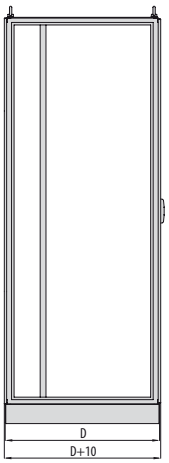

Mounting plate

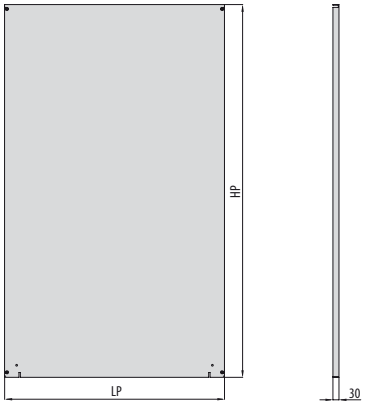

Top view

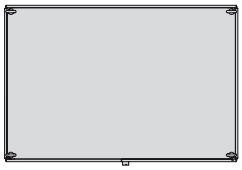

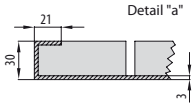

2000			2200			
1000	1000	1000	1000	1000	1000	1000
500	600	800	400	500	600	800
1921	1921	1921	2121	2121	2121	2121
896	896	896	896	896	896	896
WZ-6282-01-23-011	WZ-6282-01-22-011	WZ-6282-01-21-011	WZ-6282-01-08-011	WZ-6282-01-07-011	WZ-6282-01-06-011	WZ-6282-01-05-011
WZ-6282-18-07-011	WZ-6282-18-06-011	WZ-6282-18-05-011	WZ-6282-18-04-011	WZ-6282-18-03-011	WZ-6282-18-02-011	WZ-6282-18-01-011
WZ-6282-24-02-000	WZ-6282-24-02-000	WZ-6282-24-02-000	WZ-6282-24-01-000	WZ-6282-24-01-000	WZ-6282-24-01-000	WZ-6282-24-01-000
–	–	–	–	–	–	–
WZ-6282-78-02-000	WZ-6282-78-02-000	WZ-6282-78-02-000	WZ-6282-78-02-000	WZ-6282-78-02-000	WZ-6282-78-02-000	WZ-6282-78-02-000
WZ-6282-79-02-000	WZ-6282-79-02-000	WZ-6282-79-02-000	WZ-6282-79-02-000	WZ-6282-79-02-000	WZ-6282-79-02-000	WZ-6282-79-02-000

2000			2200			
1200	1200	1200	1200	1200	1200	1200
500	600	800	400	500	600	800
1921	1921	1921	2121	2121	2121	2121
1096	1096	1096	1096	1096	1096	1096
WZ-6282-01-19-011	WZ-6282-01-18-011	WZ-6282-01-17-011	WZ-6282-01-04-011	WZ-6282-01-03-011	WZ-6282-01-02-011	WZ-6282-01-01-011
WZ-6282-18-07-011	WZ-6282-18-06-011	WZ-6282-18-05-011	WZ-6282-18-04-011	WZ-6282-18-03-011	WZ-6282-18-02-011	WZ-6282-18-01-011
WZ-6282-24-02-000	WZ-6282-24-02-000	WZ-6282-24-02-000	WZ-6282-24-01-000	WZ-6282-24-01-000	WZ-6282-24-01-000	WZ-6282-24-01-000
–	–	–	–	–	–	–
WZ-6282-78-01-000	WZ-6282-78-01-000	WZ-6282-78-01-000	WZ-6282-78-01-000	WZ-6282-78-01-000	WZ-6282-78-01-000	WZ-6282-78-01-000
WZ-6282-79-01-000	WZ-6282-79-01-000	WZ-6282-79-01-000	WZ-6282-79-01-000	WZ-6282-79-01-000	WZ-6282-79-01-000	WZ-6282-79-01-000

ACCESSORIES FOR SZE3 CABINETS

DOORS

Doors

SZE3 cabinets have solid metal door as standard. If required, the door can be glazed and/or ventilated. The door can be mounted not only on the cabinet's front and back but also on its sides. Tightness is ensured by a seal cast of foamed polyurethane.
The door has M8 earthing bolts. A standard cabinet has a four-point lock with doppelbart insert and no handle. The lock is located outside the sealed zone, so it does not compromise protection degree IP.
Maximum door opening angle: 150°
At the customer's request we can introduce various kinds of modifications, such as cutting out holes for touch panels, adding external hinges to increase the door opening angle, etc.

Material:
- sheet steel powder paint, light grey (RAL 7035),
- galvanized steel stiffening profiles, perforated for installing cable trays, for example,
- brown smoked safety glass,
- door ventilated through plastic ventilation grilles protection degree IP 54.

Scope of delivery:
Complete wing of door with hinges and lock that includes doublebit insert (no handle).

SINGLE-WING DOOR

For cabinet		Door dimensions		Catalogue number					
height [mm]	width [mm]	H [mm]	W [mm]	Solid door IP 55	Door with glass IP 55	Door with ventilation IP 54		Door with glass and ventilation IP 54	
				right/left	right/left	right	left	right	left
2200	800	2190	795	WZ-6282-30-01-011	WZ-6282-68-01-011	WZ-6282-74-01-011	WZ-6282-74-07-011	WZ-6282-76-01-011	WZ-6282-76-07-011
	600	2190	595	WZ-6282-30-02-011	WZ-6282-68-02-011	WZ-6282-74-02-011	WZ-6282-74-08-011	WZ-6282-76-02-011	WZ-6282-76-08-011
2000	800	1990	795	WZ-6282-30-03-011	WZ-6282-68-03-011	WZ-6282-74-03-011	WZ-6282-74-09-011	WZ-6282-76-03-011	WZ-6282-76-09-011
	600	1990	595	WZ-6282-30-04-011	WZ-6282-68-04-011	WZ-6282-74-04-011	WZ-6282-74-10-011	WZ-6282-76-04-011	WZ-6282-76-10-011
1800	800	1790	795	WZ-6282-30-05-011	WZ-6282-68-05-011	WZ-6282-74-05-011	WZ-6282-74-11-011	WZ-6282-76-05-011	WZ-6282-76-11-011
	600	1790	595	WZ-6282-30-06-011	WZ-6282-68-06-011	WZ-6282-74-06-011	WZ-6282-74-12-011	WZ-6282-76-06-011	WZ-6282-76-12-011

Package: 1 pc.

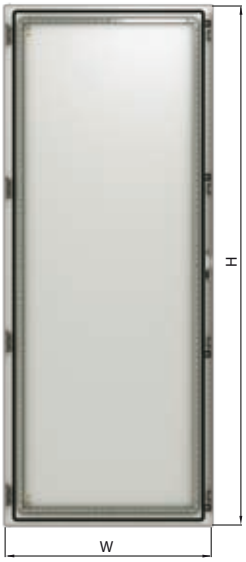

DOUBLE-WING DOOR

For cabinet		Door dimensions			Catalogue number					
					Solid door IP 55		Door with glass IP 55		Door with ventilation IP 54	
height [mm]	width [mm]	H [mm]	WR [mm]	WL [mm]	right* wing	left* wing	right* wing	left* wing	right* wing	left* wing
2200	1200	2190	595	638	WZ-6282-45-01-011	WZ-6282-47-01-011	WZ-6282-81-01-011	WZ-6282-83-01-011	WZ-6282-85-01-011	WZ-6282-87-01-011
	1000	2190	495	538	WZ-6282-45-02-011	WZ-6282-47-02-011	WZ-6282-81-02-011	WZ-6282-83-02-011	WZ-6282-85-02-011	WZ-6282-87-02-011
2000	1200	1990	595	638	WZ-6282-45-03-011	WZ-6282-47-03-011	WZ-6282-81-03-011	WZ-6282-83-03-011	WZ-6282-85-03-011	WZ-6282-87-03-011
	1000	1990	495	538	WZ-6282-45-04-011	WZ-6282-47-04-011	WZ-6282-81-04-011	WZ-6282-83-04-011	WZ-6282-85-04-011	WZ-6282-87-04-011
1800	1200	1790	595	638	WZ-6282-45-05-011	WZ-6282-47-05-011	WZ-6282-81-05-011	WZ-6282-83-05-011	WZ-6282-85-05-011	WZ-6282-87-05-011
	1000	1790	495	538	WZ-6282-45-06-011	WZ-6282-47-06-011	WZ-6282-81-06-011	WZ-6282-83-06-011	WZ-6282-85-06-011	WZ-6282-87-06-011

Package: 1 pc. (wing)

*) when facing the structure

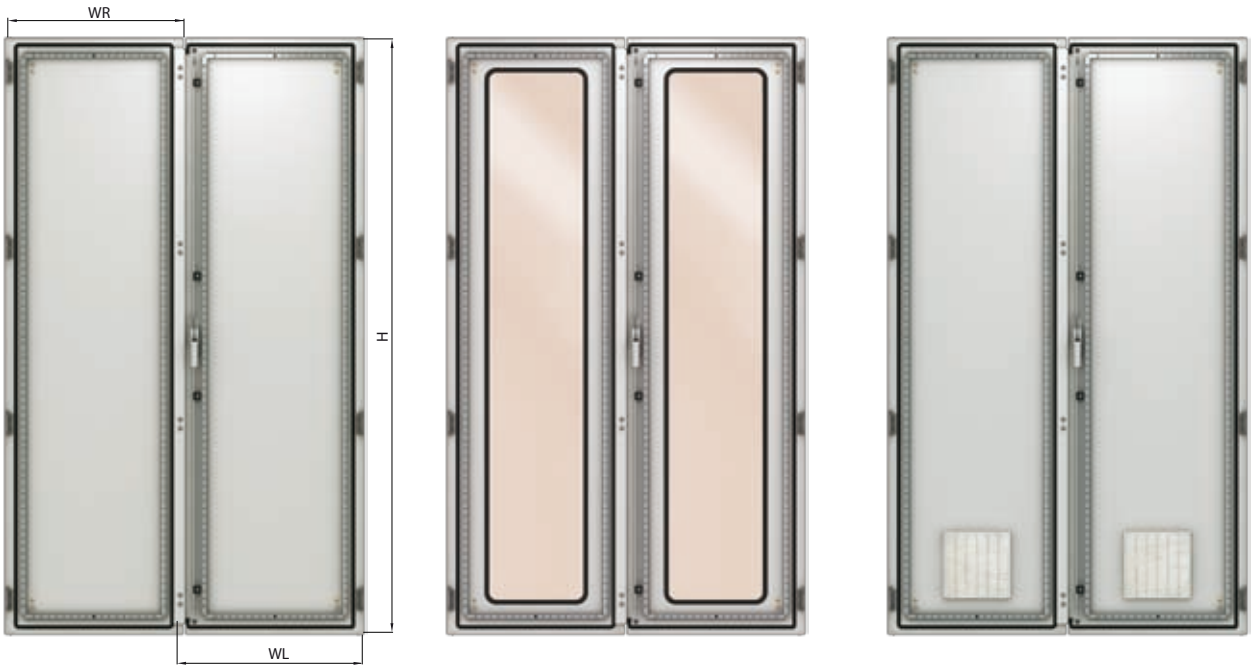

ACCESSORIES FOR SZE3 CABINETS

SIDE PANELS • LIFTING ACCESSORIES

Side panels

Panels are bolted to the frame with intermediate elements that position the panel in the frame.
All panels are fitted with seals cast of polyurethane foam, and M8 stud bolts for mounting earthing wires.
If requested, the side panels can have holes for air vents, fans, heat exchangers and air conditioners.

Material:
Sheet steel powder painted in light grey (RAL 7035)

Scope of delivery:
Set of 2 side panels with fixing accessories for mounting into the cabinet.

For cabinet		Catalogue number
height [mm]	depth [mm]	
2200	800	WZ-6282-18-01-011
	600	WZ-6282-18-02-011
	500	WZ-6282-18-03-011
	400	WZ-6282-18-04-011
2000	800	WZ-6282-18-05-011
	600	WZ-6282-18-06-011
	500	WZ-6282-18-07-011
	400	WZ-6282-18-08-011
1800	800	WZ-6282-18-09-011
	600	WZ-6282-18-10-011
	500	WZ-6282-18-11-011
	400	WZ-6282-18-12-011

Package: 2 pc.

Eyebolt

Lifting angle

Lifting accessories

Fixed to threaded holes in the top corners of the cabinet's frame.

Offered in two options:
1) eyebolts - galvanised steel, eye diameter: 30 mm, thread for fastening: M12;
2) lifting angle for cabinets bayed in rows - galvanised steel angle, lifting hole diameter: 38 mm, two holes for mounting screws M12.

Scope of delivery:
Lifting accessories are sold separately.
Lifting angle is supplied with mounting screws.

Product name	Package	Catalogue number
eyebolt	1 pc.	M1F-00-0106
lifting angle	1 pc.	WZ-6282-69-00-C12

Modular plinth

It consists of 4 corners and 4 or 8 removable side panels. Total weight of the cabinet is carried by plinth corners. It is possible to reach the area under the cabinet by unscrewing the side panels. Plinth can be mounted to the base by optionally using 4 rubber vibro-shock absorbers.

Ordering method:
Plinth includes the following elements: plinth corners with appropriate plinth side panels depending on the cabinet's width and depth.

Plinth side panels

There are three types of plinth side panels available - see the pictures. Each type has the standard height of 99 mm. Side panels can be removed even when the cabinet is loaded with equipment.

Material:
Sheet steel, powder painted in light grey (RAL 7035).

Scope of delivery:
Panel with fixing accessories.

Type of connector	Length of side panel [mm]	Length of plinth's side [mm]	Catalogue number
solid	1000	1200	WZ-1982-03-09-011
	800	1000	WZ-1982-03-08-011
	600	800	WZ-1982-03-07-011
	400	600	WZ-1982-03-05-011
	300	500	WZ-1982-03-12-011
	200	400	WZ-1982-03-02-011
perforated	1000	1200	WZ-1982-05-09-011
	800	1000	WZ-1982-05-08-011
	600	800	WZ-1982-05-07-011
	400	600	WZ-1982-05-05-011
	300	500	WZ-1982-05-12-011
	200	400	WZ-1982-05-02-011
with brush opening	1000	1200	WZ-1982-04-09-011
	800	1000	WZ-1982-04-08-011
	600	800	WZ-1982-04-07-011
	400	600	WZ-1982-04-05-011
	300	500	WZ-1982-04-12-011
	200	400	WZ-1982-04-02-011

Package: 1 pc.

Solid side panel

Perforated side panel

Side panel with brush opening

ACCESSORIES FOR SZE3 CABINETS

CABINET'S BASE

Plinth corners

Available in two heights.

Material:
sheet steel powder painted in light grey (RAL 7035).

Scope of delivery:
Set of 4 corners include fixing accessories for assembling a plinth to the cabinet.

Height [mm]	Package	Catalogue number
200	4 pc.	WZ-2174-05-02-011
100	4 pc.	WZ-1982-08-02-011

Vibro-shock absorber

Corner with vibro-shock absorber

Vibro-shock absorbers

The simple plinths can be optionally equipped with vibroshock absorbers. Plinth with vibro-shock absorbers should be fixed into the room's floor. Four vibro-shock absorbers are needed for one plinth.

Material:
10 mm thick rubber

Scope of delivery:
Vibro-shock absorber (1 pc.) without fixing accessories.

Package	Catalogue number
1 pc.	M1Z-00-0048

Welded plinth

Indicated for heavy duty cabinets. Provide to transport cabinets with forklift truck without using transport pallet.

Material:
Sheet steel powder paint, light grey (RAL 7035)

Scope of delivery:
Plinth with mounting accessories for fastening plinth to the cabinet.

For cabinet		Catalogue number
width [mm]	depth [mm]	Plinth 100 mm high
1200	800	WZ-6282-15-01-011
	600	WZ-6282-15-02-011
	500	WZ-6282-15-03-011
	400	WZ-6282-15-04-011
1000	800	WZ-6282-15-05-011
	600	WZ-6282-15-06-011
	500	WZ-6282-15-07-011
	400	WZ-6282-15-08-011

Package: 1 pc.

For cabinet		Catalogue number
width [mm]	depth [mm]	Plinth 100 mm high
800	800	WZ-6282-15-09-011
	600	WZ-6282-15-10-011
	500	WZ-6282-15-11-011
	400	WZ-6282-15-12-011
600	800	WZ-6282-15-13-011
	600	WZ-6282-15-14-011
	500	WZ-6282-15-15-011
	400	WZ-6282-15-16-011

Package: 1 pc.

Mounting plate

The mounting plate is designed for installing different equipment inside the SZE3 cabinet. Detailed dimensions of the mounting plates are given in the drawing on pages 322-325.

Material:
Galvanized steel sheet, 3 mm thickness

Scope of delivery:
Mounting plate with fixing accessories for smooth adjustment within the cabinet's depth. Mounting plate guides are sold separately. In order to fasten the mounting plate on the back of the cabinet, between the rear posts of the frame, requires two additional lower brackets, ordered separately – see page 332.

For cabinet		Catalogue number
Height [mm]	Width [mm]	
2200	1200	WZ-6282-33-01-000
	1000	WZ-6282-33-02-000
	800	WZ-6282-33-03-000
	600	WZ-6282-33-04-000
2000	1200	WZ-6282-33-05-000
	1000	WZ-6282-33-06-000
	800	WZ-6282-33-07-000
	600	WZ-6282-33-08-000
1800	1200	WZ-6282-33-09-000
	1000	WZ-6282-33-10-000
	800	WZ-6282-33-11-000
	600	WZ-6282-33-12-000

Package: 1 pc.

Note:
On special order, we make hinged mounting plates, using galvanized steel sheet or textolite plate.
The mounting plate can also be powder-painted in RAL 7035 (standard colour) or any other colour on demand.

Mounting plate

Mounting plate guides

The guides are designed for installing the mounting plate in the SZE3 cabinet. They make inserting and positioning the plate inside the cabinet easier.

Material:
Al-Zn-coated steel sheet

Scope of delivery:
Set of 2 guides together with accessories for fixing them on the bottom plate of the cabinet.

For cabinet depth [mm]	Catalogue number
800	WZ-6282-35-01-000
600	WZ-6282-35-02-000
500	WZ-6282-35-03-000
400	WZ-6282-35-04-000

Package: 1 set

Mounting plate guides

Mounting plate mounted on guides and brackets for smooth adjustment within the cabinet's depth

ACCESSORIES FOR SZE3 CABINETS

MOUNTING PLATE

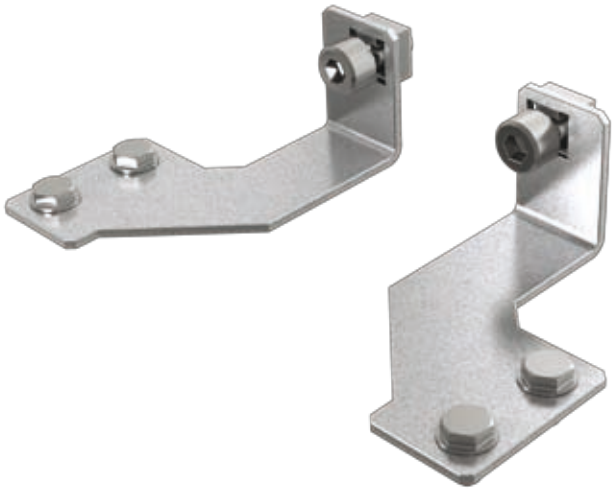

Mounting plate brackets

For fastening the mounting plate on the back of the closet, between the rear posts of the frame.

Material:
Al-Zn-coated steel sheet

Scope of delivery:
Two brackets (right and left) with fixing accessories.

Package	Catalogue number
1 pc.	WZ-6282-36-00-000

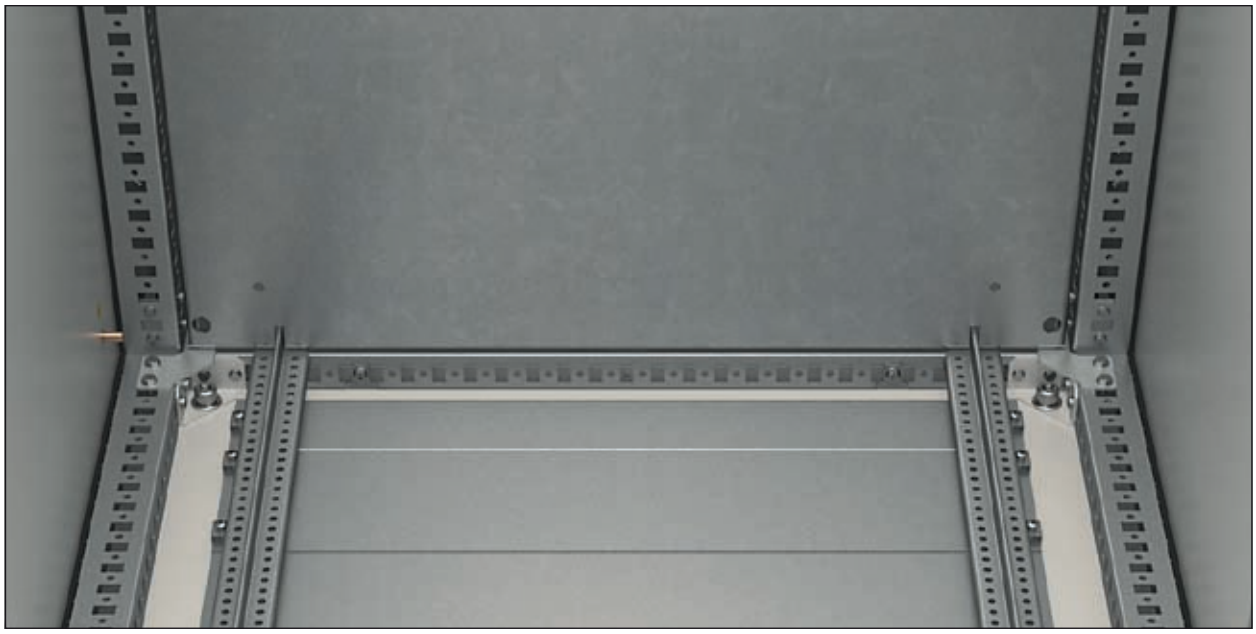

Mounting plate fastened on the back of the cabinet, between the frame posts

19" swing frame

Intended for cabinets 800 mm wide.
Equipped with door-stop.
Two locks with double-bit insert.
Possibility of left- or right-side assembly by 180° rotation.

Maximum opening angle: 120°

Load capacity: 150 kg

Material:
Galvanized steel sheet and profiles

Scope of delivery:
Swing frame with fixing accessories for mounting to the cabinet.

For cabinet height H [mm]	Usable height of the frame HU [U = 44.45 mm]	Maximum depth for installations D_{max} [mm]	Catalogue number
2200	44 U	350	WZ-6282-63-01-C08
2000	40 U	350	WZ-6282-63-02-C08
1800	35 U	350	WZ-6282-63-03-C08

Package: 1 pc.

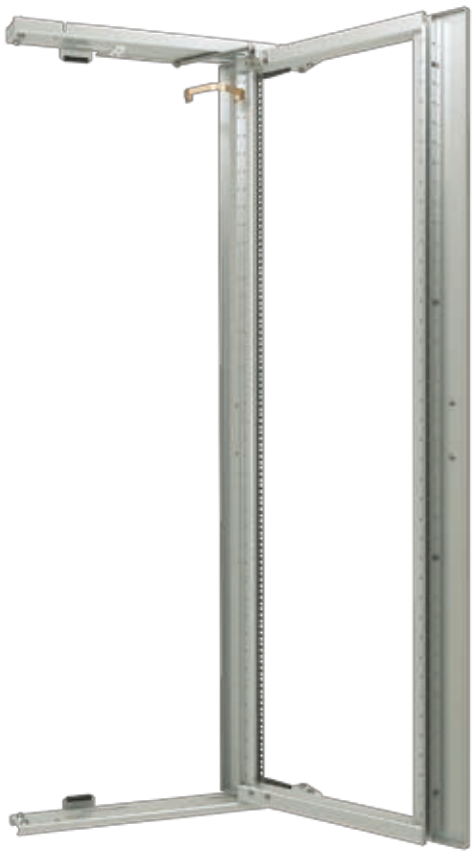

SZE3 cabinet with swing frame
Front view without door

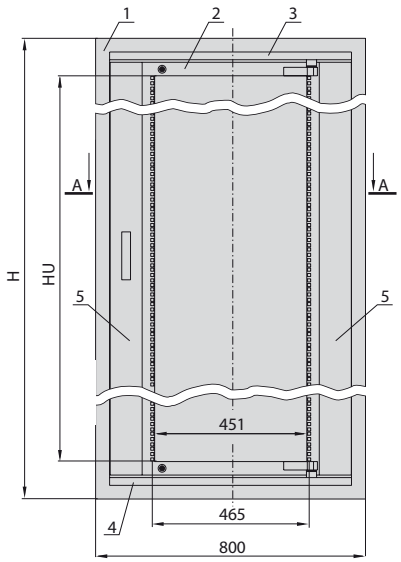

A-A section

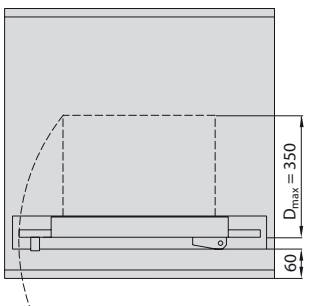

DESIGN

1. Cabinet frame
2. 19" swing frame
3. Top supporting bar
4. Bottom supporting bar
5. Masking panel

ACCESSORIES FOR SZE3 CABINETS

MOUNTING BARS SYSTEM

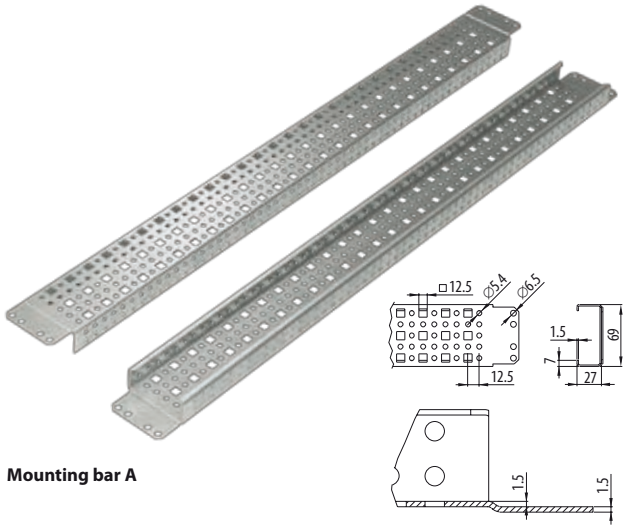

Mounting bar A

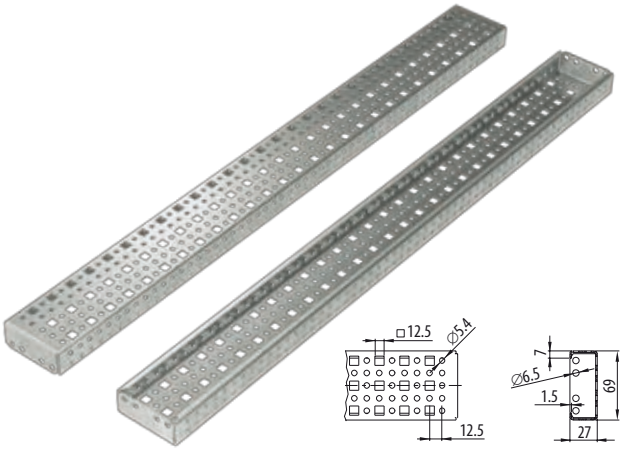

Mounting bar B

Mounting bars

For building racks inside the cabinet.
Available in two types that differ in fastening method.

Material:
Al-Zn coated sheet steel

Scope of delivery:
Mounting bar without fixing accessories.

Type of mounting bar	For cabinet width or height* [mm]	Total length of mounting bar [mm]	Catalogue number
A	1200	1162	WZ-6282-40-01-000
	-	1062	WZ-6282-40-02-000
	1000	962	WZ-6282-40-03-000
	-	862	WZ-6282-40-04-000
	800	762	WZ-6282-40-05-000
	-	662	WZ-6282-40-06-000
	600	562	WZ-6282-40-07-000
	500	462	WZ-6282-40-08-000
	400	362	WZ-6282-40-09-000
	-	262	WZ-6282-40-10-000
B	1200	1106	WZ-6282-42-01-000
	-	1006	WZ-6282-42-02-000
	1000	906	WZ-6282-42-03-000
	-	806	WZ-6282-42-04-000
	800	706	WZ-6282-42-05-000
	-	606	WZ-6282-42-06-000
	600	506	WZ-6282-42-07-000
	500	406	WZ-6282-42-08-000
	400	306	WZ-6282-42-09-000
	-	206	WZ-6282-42-10-000

Package: 1 pc.

*) For horizontal fixing between the posts of the cabinet's frame

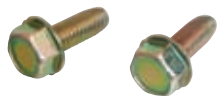

Self forming screws M6x16

Fixing accessories

Self forming screws M6x16 – for fastening mounting profiles to the cabinet's frame and for interconnecting mounting profiles.
Cage nuts M8 with wings – for fastening devices to the cabinet's frame.

Scope of delivery:
Sold in sets of 20 pieces.

Cage nuts M8 with wings

Description	Package	Catalogue number
Self forming screw M6x16	20 pc.	WZ-1951-44-01-000
Cage nut M8 with wings	20 pc.	WZ-6282-88-00-000

ACCESSORIES FOR SZE3 CABINETS

MOUNTING BARS SYSTEM

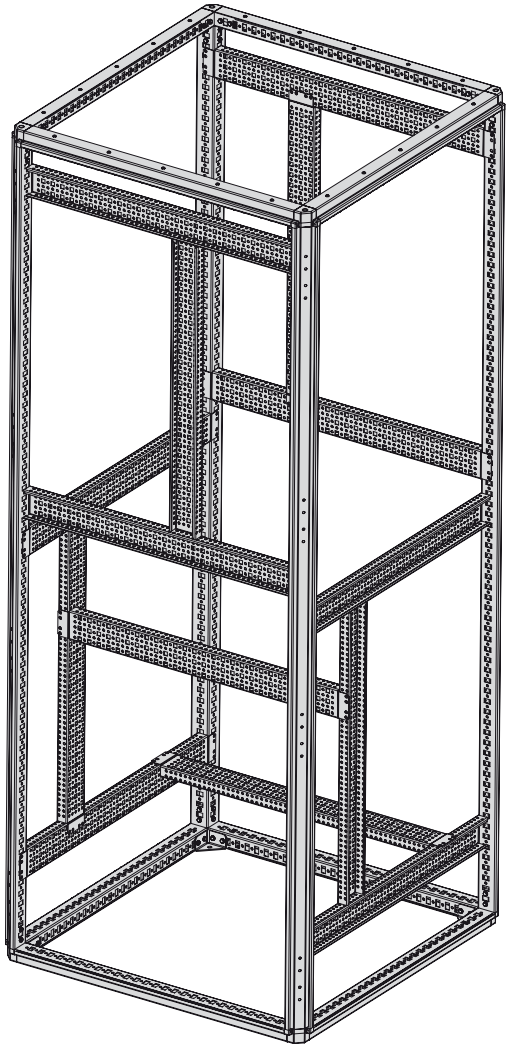

**Example of built rack
from mounting bars type A**

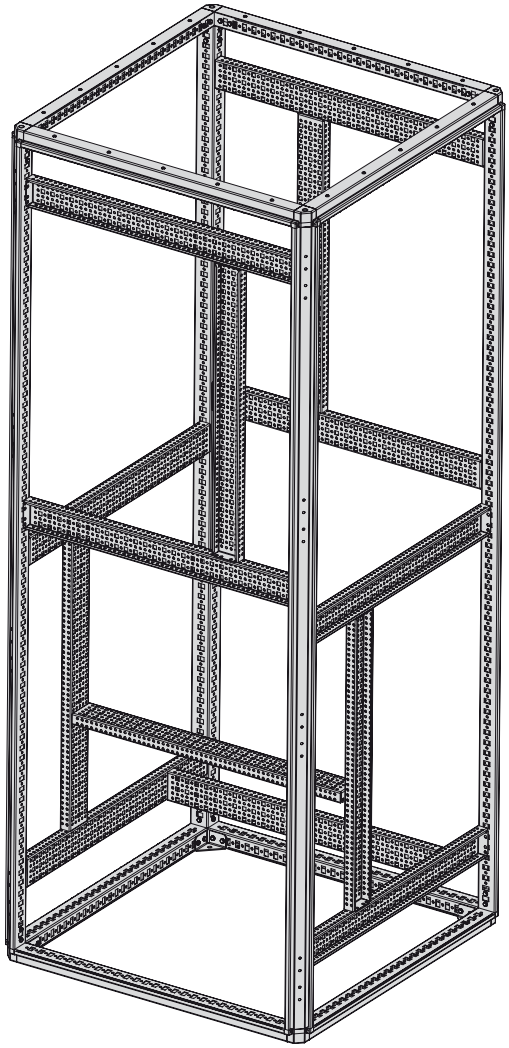

**Example of built rack
from mounting bars type B**

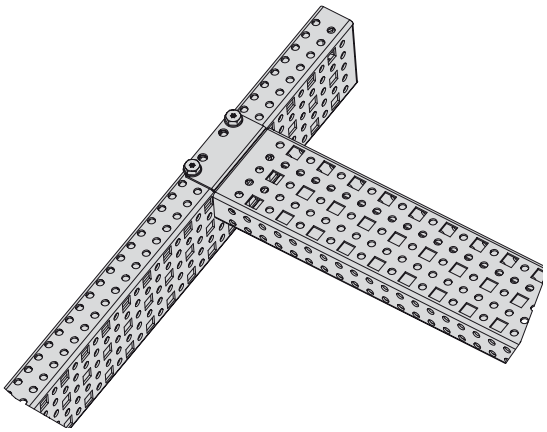

**Example of connecting profile types A and B
with M6 self-tapping screws**

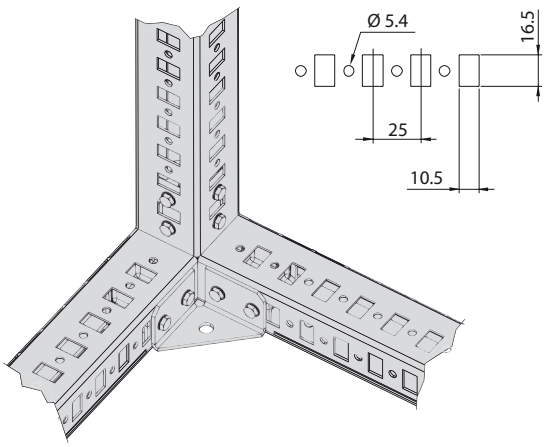

Perforation in SZE3 cabinet's frame:
- 10.5 x 16.5 mm holes for M8 cage nuts with wings,
- Ø 5.4 mm holes for M6 self-tapping screws

ACCESSORIES FOR SZE3 CABINETS

BAYING CABINETS IN ROWS

Mounting plate infill

The plate infill makes it possible to achieve uniform mounting plane in cabinets bayed in rows.

Material:
Zinc coated sheet steel

Scope of delivery:
Mounting plate infill with fixing accessories.

For cabinet height [mm]	Catalogue number
2200	WZ-6282-24-01-000
2000	WZ-6282-24-02-000
1800	WZ-6282-24-03-000

Package: 1 pc.

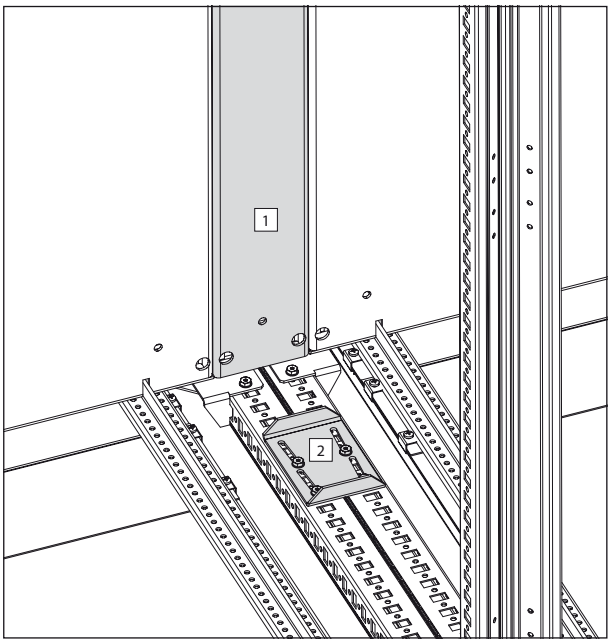

1 - mounting plates connector
2 - frame connector – type A

Frame connector

For connecting cabinets in serial sets.

Material:
Al-Zn coated sheet steel

Scope of delivery:
Connector with fixing accessories.

Type of connector	Package	Catalogue number
A	1 pc.	WZ-6400-63-00-000
B	1 pc.	WZ-6400-64-00-000

Type A

Type B

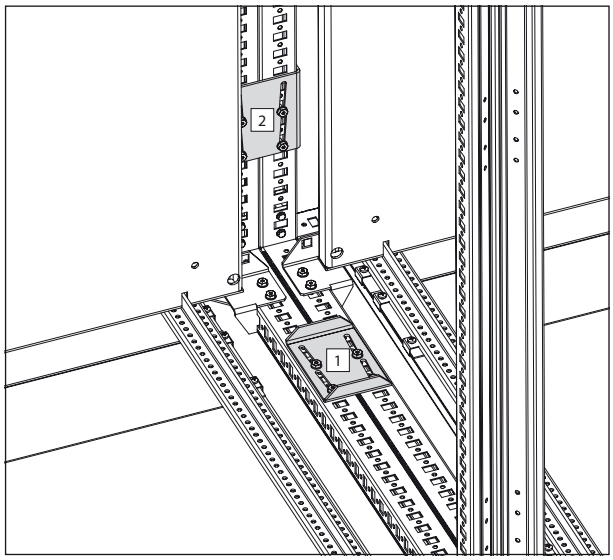

1 - frame connector – type A
2 - frame connector – type B

Lighting

LED lamp, 230 V, 5 W, with switch and 1,3 m power cord. Mounted with two magnets. Serial installation possible.

Material:
plastic.

Delivery scope:
Lamp (1 pc.) with power cord.

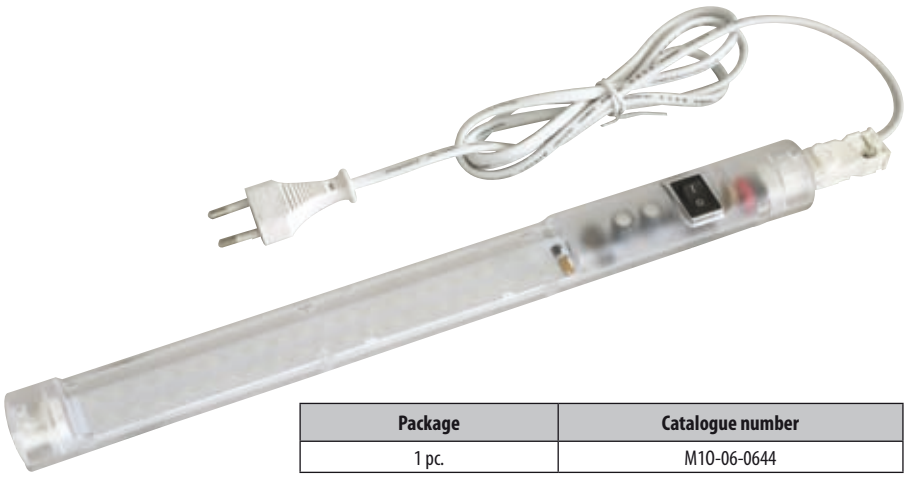

Package	Catalogue number
1 pc.	M10-06-0644

ACCESSORIES FOR SZE3 CABINETS

EARTHING AND POTENTIAL EQUALISATION

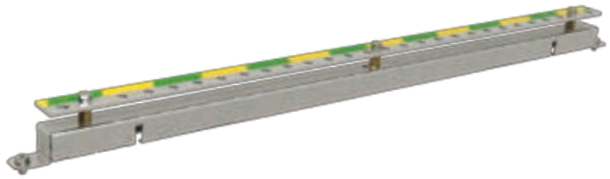

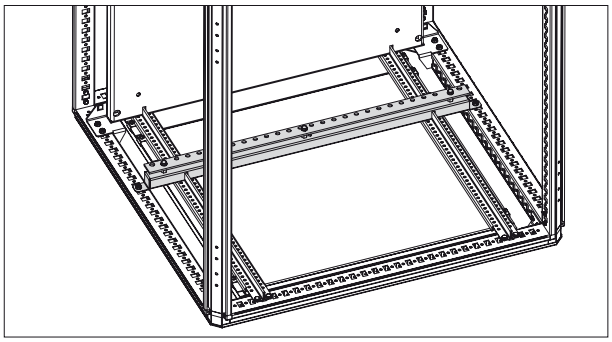

Earthing bar

Earthing bar with a bracket for mounting on horizontal profiles of SZE3 cabinet's frame. It has M8 threaded holes for fastening cables. Bar mounted to the bracket using metal fixing/spacer bolts.

Material:
Earthing bar - zinc coated steel
Mounting bracket - Al-Zn coated sheet steel

Scope of delivery:
Earthing bar with bracket and fixings accessories for cabinet installation.

For cabinet width [mm]	Package	Catalogue number
1200	1 pc.	WZ-6282-78-01-000
1000	1 pc.	WZ-6282-78-02-000
800	1 pc.	WZ-6282-78-03-000
600	1 pc.	WZ-6282-78-04-000

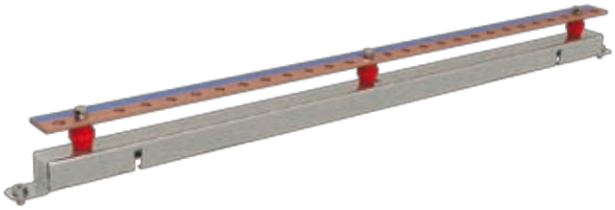

Potential equalisation bar

Potential equalisation bar with a bracket for mounting on horizontal profiles of SZE3 cabinet's frame.
It has M8 threaded holes for fastening cables.
Bar mounted to the bracket using insulators.

Material:
Potential equalisation bar - copper
Mounting bracket - Al-Zn coated sheet steel

Scope of delivery:
Potential equalisation bar with bracket and fixings accessories for cabinet installation.

For cabinet width [mm]	Package	Catalogue number
1200	1 pc.	WZ-6282-79-01-000
1000	1 pc.	WZ-6282-79-02-000
800	1 pc.	WZ-6282-79-03-000
600	1 pc.	WZ-6282-79-04-000

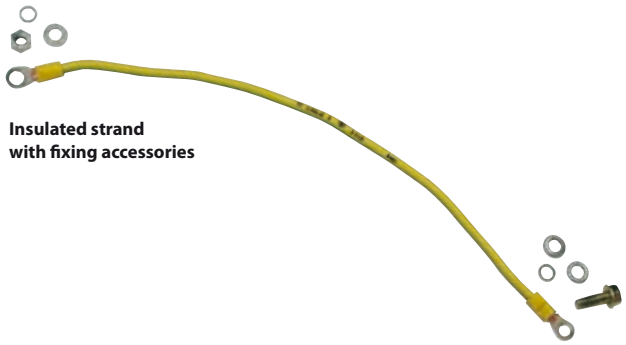

Insulated strand with fixing accessories

Earthing cable set

Copper wires for making compensation protective connections between all the removable components of the cabinet, its structure, and the earthing strip.
Cables are terminated with ring terminals for M8 bolts.

Material:
Copper

Scope of delivery:
Set: 9 Insulated strand, full section 6 mm^2, fixing accessories

Package	Catalogue number
1 pc.	WZ-1951-33-00-000

SWN WALL-MOUNTED CABINETS

SWN WALL-MOUNTED CABINETS

TECHNICAL DATA

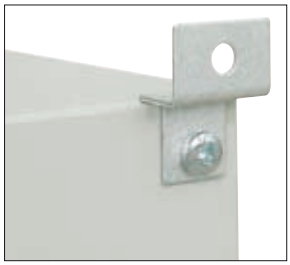

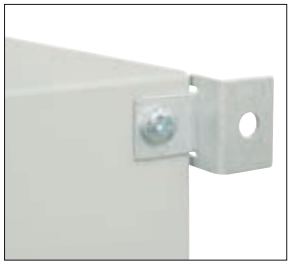

- Compact wall-mounted cabinets designed for electrical installations.
- In the standard version they are designed for indoor applications.
- Manufactured in 20 dimensions in accordance with the chart below.
- Cabinets of non-standard dimensions or stainless steel options are quoted individually.

REFERENCE CHART

Width [mm]	Depth [mm]	Height [mm]					
		300	400	500	600	800	1000
		Catalogue numbers of standard SWN cabinets					
200	115	WZ-2285-01-01-011	—	—	—	—	—
300	150	WZ-2285-01-02-011	—	—	—	—	—
	210	—	WZ-2285-01-03-011	—	—	—	—
400	150	—	—	—	—	—	—
	210	WZ-2285-01-04-011	WZ-2285-01-05-011	WZ-2285-01-06-011	—	—	—
	250	—	—	—	WZ-2285-01-07-011	—	—
	300	—	WZ-2285-01-08-011	WZ-2285-01-09-011	—	—	—
500	210	—	—	WZ-2285-01-10-011	—	—	—
	250	—	WZ-2285-01-11-011	—	WZ-2285-01-12-011	—	—
	300	—	—	—	WZ-2285-01-13-011	—	—
600	250	—	WZ-2285-01-14-011	—	WZ-2285-01-15-011	WZ-2285-01-16-011	WZ-2285-01-17-011
	300	—	—	—	—	WZ-2285-01-18-011	—
800	300	—	—	—	—	WZ-2285-01-19-011	WZ-2285-01-20-011

TECHNICAL DATA

Material:
Sheet steel

Protection degree:
IP 65 in accordance with EN 60529

Surface finish:
Body, door, blanking plate – Epoxide-polyester thick-texture powder paint in RAL 7035, intended for indoor usage. On customer's request, it is possible to use facade paint with improved resistance to adverse weather conditions and optional use of polyzinc base.

Mounting plate - Al-Zn coated

Note:
On request, the body, door and blanking plate can be made of stainless steel.

DESCRIPTION OF SWN CABINET DESIGN

Body
- The body of SWN is a tight-welded sheet metal structure. Optimised door light ensures maximum use of available space.
- A multi-folded enclosure aperture protects against dust and moisture even when the door is open.
- In the bottom of the body, there is an opening for a gland plate. Dimensions of the opening depend on cabinet dimensions.
- Inside the body there are self-tapping screws for fixing the mounting plate.
- On the rear side of the body there are cut-outs for mounting the cabinet directly on the wall or by using lifting brackets.

Door
- Cabinets are provided with a single-wing door.
- Depending on height, either one or two locks including double-bit insert are used:
  - cabinets up to 400 mm high - one lock in the middle;
  - cabinets from 500 to 1000 mm high - two locks.
- There are hinges fixed to the door; the number depends on cabinet height: from 300 to 600 mm - two hinges, from 800 to 1000 mm - three hinges.
- Interior of the door including sealing gasket and earthing studs.
- Left or right door option.
- Maximum door opening angle 120°.

Mounting plate
- Fixed to rear side of the body.
- In cabinets up to 600 mm high the flat mounting plate is used.
- In cabinets 800 or 1000 mm high, a folded mounting plate is used
  to maintain appropriate stiffness.
- Mounting plate including fixing points for earthing bar.

Blanking plate - cable entry plate
- Cabinets with cat. no. from WZ-2285-01-**01**-011 to WZ-2285-01-**10**-011 includes one blanking plate installed in cabinet's bottom (see picture).
- Cabinets with cat. no. from WZ-2285-01-**11**-011 to WZ-2285-01-**20**-011 includes two blanking plates (upper and bottom), which covers whole surface of upper and bottom plate.
- Fixed by self-tapping screws.
- Includes sealing gasket and earthing stud.
- Gland cable entries available on request.

Earthing and potential equalisation
- The door and the blanking plate including earthing studs.
- Earthing bar and potential equalisation bar (for fixing to the mounting plate) and earthing cables are delivered as supplementary accessories.

Blanking plate fixed to the cabinet's bottom

SWN WALL-MOUNTED CABINETS

DESIGN

Flat mounting plate
(for cabinets from
300 to 600 mm high)

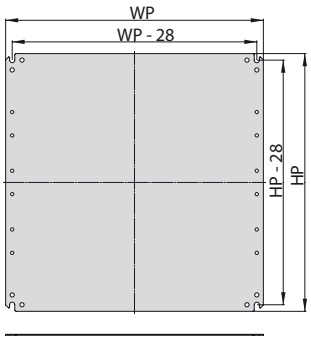

Folded mounting plate
(for cabinets 800
and 1000 mm high)

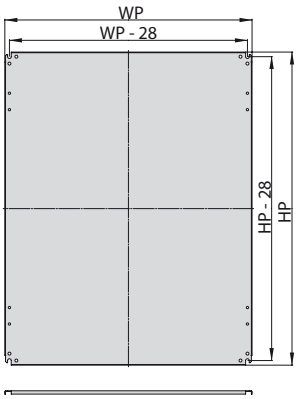

ORDERING INSTRUCTION

When ordering SWN wall mounted cabinet or supplementary accessories, **refer to catalogue numbers from the chart**.

REFERENCE CHART

Cabinet dimensions [mm]	**Height H**	300			400				
	Width W	200	300	400	300	400	400	500	600
	Depth D	115	150	210	210	210	300	250	250
Number of locks in the door		1	1	1	1	1	1	1	1
Number of hinges in the door		2	2	2	2	2	2	2	2
Mounting plate dimensions [mm]	**Height HP**	251	251	251	351	351	351	351	351
	Width WP	151	251	351	251	351	351	451	551
Cable entry plate dimensions	**A dimension**	172	172	341	172	341	341	496	596
	B dimension	82	82	101	82	101	101	221	221

		Package	**Catalogue numbers**							
SWN cabinet*		1 pc.	WZ-2285-01-01-011	WZ-2285-01-02-011	WZ-2285-01-04-011	WZ-2285-01-03-011	WZ-2285-01-05-011	WZ-2285-01-08-011	WZ-2285-01-11-011	WZ-2285-01-14-011
Supplementary accessories	**Potential equalisation bar**	1 pc.	WZ-2285-10-01-000	WZ-2285-10-01-000	WZ-2285-10-01-000	WZ-2285-10-01-000	WZ-2285-10-01-000	WZ-2285-10-01-000	WZ-2285-10-02-000	WZ-2285-10-02-000
	Earthing set	1 set	WZ-2285-13-00-000							
	Set of brackets for wall mounting	1 set = 4 pcs.	WZ-2285-14-00-000							

***) SWN cabinet - scope of delivery:** body, door, mounting plate, blanking plate (cable entry plate).

WALL-MOUNTED CABINETS SWN

DESIGN

Front view

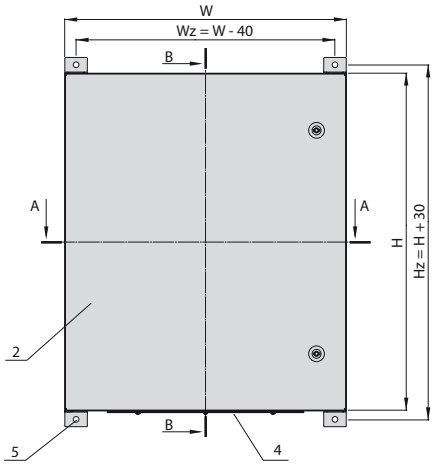

B-B section

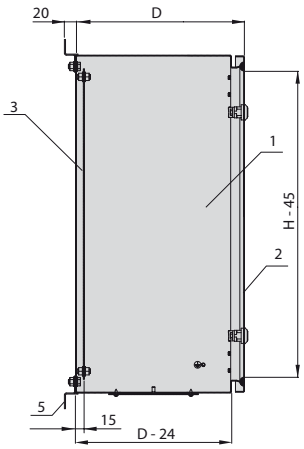

A-A section

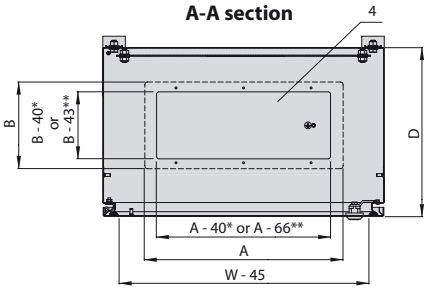

*) refers to cabinets with cat. no. from WZ-2285-01-**01**-011 to WZ-2285-01-**10**-011
) refers to cabinets with cat. no. from WZ-2285-01-11**-011 to WZ-2285-01-**20**-011

DESIGN

1. Body
2. Door
3. Mounting plate
4. Blanking plate - cable entry plate
5. Wall bracket (ordered separately)

Note:
Cabinets with catalogue number from WZ-2285-01-**11**-011 to WZ-2285-01-**20**-011 includes two blanking plates (upper and bottom), which covers whole surface of upper and bottom plate.

500			600				800			1000	
400	400	500	400	500	500	600	600	600	800	600	800
210	300	210	250	250	300	250	250	300	300	250	300
2	2	2	2	2	2	2	2	2	2	2	2
2	2	2	2	2	2	2	3	3	3	3	3
451	451	451	551	551	551	551	751	751	751	951	951
351	351	451	351	451	451	551	551	551	751	551	751
341	341	349	341	496	496	596	596	596	796	596	796
101	101	159	101	221	271	221	221	271	271	221	271

WZ-2285-01-06-011	WZ-2285-01-09-011	WZ-2285-01-10-011	WZ-2285-01-07-011	WZ-2285-01-12-011	WZ-2285-01-13-011	WZ-2285-01-15-011	WZ-2285-01-16-011	WZ-2285-01-18-011	WZ-2285-01-19-011	WZ-2285-01-17-011	WZ-2285-01-20-011
WZ-2285-10-01-000	WZ-2285-10-01-000	WZ-2285-10-02-000	WZ-2285-10-01-000	WZ-2285-10-02-000	WZ-2285-10-02-000	WZ-2285-10-02-000	WZ-2285-10-02-000	WZ-2285-10-02-000	WZ-2285-10-02-000	WZ-2285-10-02-000	WZ-2285-10-02-000
WZ-2285-13-00-000											
WZ-2285-14-00-000											

Detailed description of supplementary accessories: page 344

SWN WALL-MOUNTED CABINETS

SUPPLEMENTARY ACCESSORIES

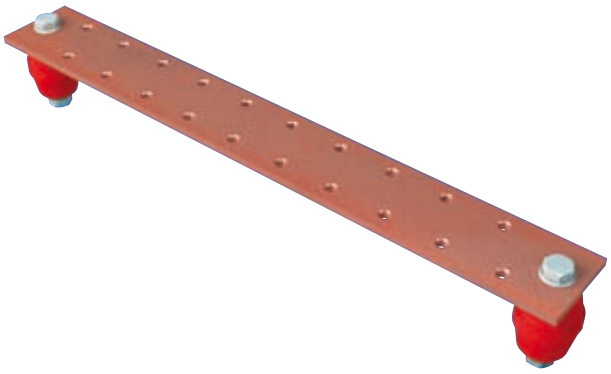

Potential equalisation bar

Fixed to the mounting plate by insulators
(fixing points are made during assembly).
Threaded holes M5 for fixing wires.

Material:
Copper bar 30 x 4 mm.

Scope of delivery:
Potential equalisation bar with 2 insulators and screws for fixing on the mounting plate.

For cabinets width [mm]	Length of the bar [mm]	Package	Catalogue number
200 - 400	130	1 pc.	WZ-2285-10-01-000
500 - 800	230	1 pc.	WZ-2285-10-02-000

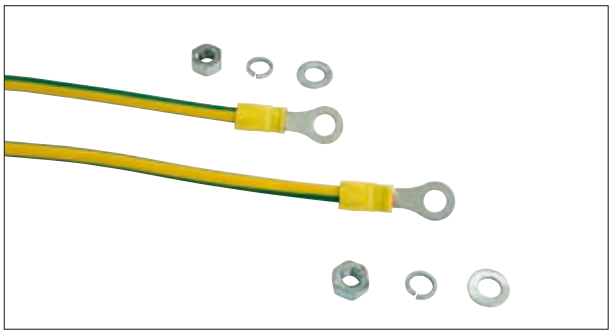

Earthing set

Consists of an earthing bar and 2 earthing cables.

Earthing bar
- Fixed to mounting plate by distance pins (standard mounting plate includes fixing points for earthing bar).
- Threaded holes M5 for fixing wires.

Earthing cables
- Insulated copper wires for joining removable elements of the cabinet with earthing bar or directly with cabinet's body.
- With contact eyes.

Material:
Galvanised steel rail 30 x 4 x 170 mm
Copper cables, full section 6 mm^2

Scope of delivery:
Set: earthing bar 170 mm long with distance pins, washers and nuts for fixing to mounting plate, 2 grounding cables 300 mm long, fixing accessories.

Package	Catalogue number
1 set	WZ-2285-13-00-000

Set of wall brackets for wall mounting

Wall brackets are fixed to openings in the rear side of the cabinet horizontally or vertically.
Diameter of openings: 10 mm.
Spacing between rear side of the cabinet and the wall: 20 mm.
1 set = 4 brackets per cabinet.

Material:
Al-Zn coated sheet steel.

Scope of delivery:
Set: 4 wall brackets with screws, nuts and washers for fixing to the rear side.

Package	Catalogue number
1 set = 4 pcs.	WZ-2285-14-00-000

19" rack for SWN cabinets

It is used for mounting 19" devices inside SWN cabinets with a width of 600 mm.
It consists of 2 mounting profiles or mounting angles and 4 brackets with fixing accessories.
For installing the rack inside the cabinet, the openings intended also for mounting hinges are used.

Material:
Al-Zn-coated steel sheet

Scope of delivery:
2 mounting profiles or mounting angles, 4 brackets with fixing accessories.

Product name	For SWN cabinet		Usable height [U = 44.45 mm]	Catalogue number
	Width [mm]	Height [mm]		
Rack made of 19" mounting angles	600	400	8 U	WZ-5922-02-01-000
		600	12 U	WZ-5922-02-02-000
		800	17 U	WZ-5922-02-03-000
		1000	21 U	WZ-5922-02-04-000
Rack made of 19" mounting profiles	600	400	8 U	WZ-5922-02-05-000
		600	12 U	WZ-5922-02-06-000
		800	17 U	WZ-5922-02-07-000
		1000	21 U	WZ-5922-02-08-000

Package: 1 set

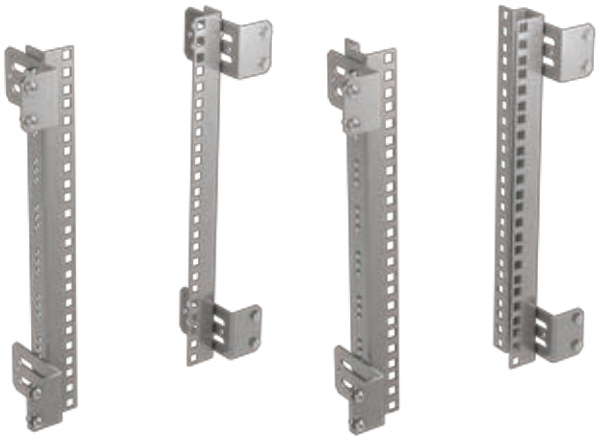

Rack made of 19" mounting angles

Rack made of 19" mounting profiles

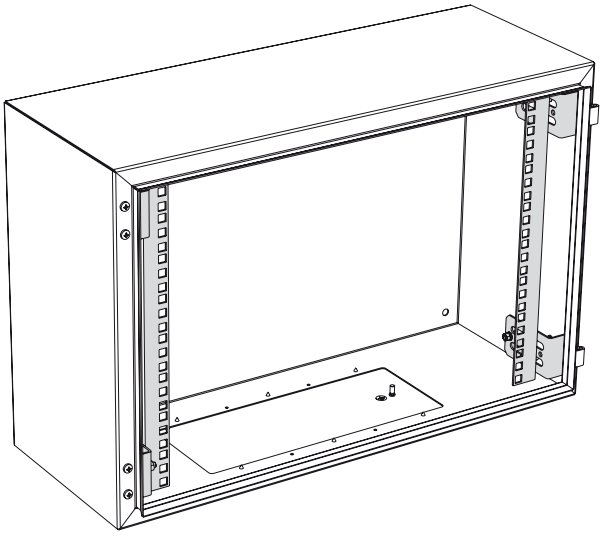

SWN cabinet's body with installed rack made of 19" mounting angles

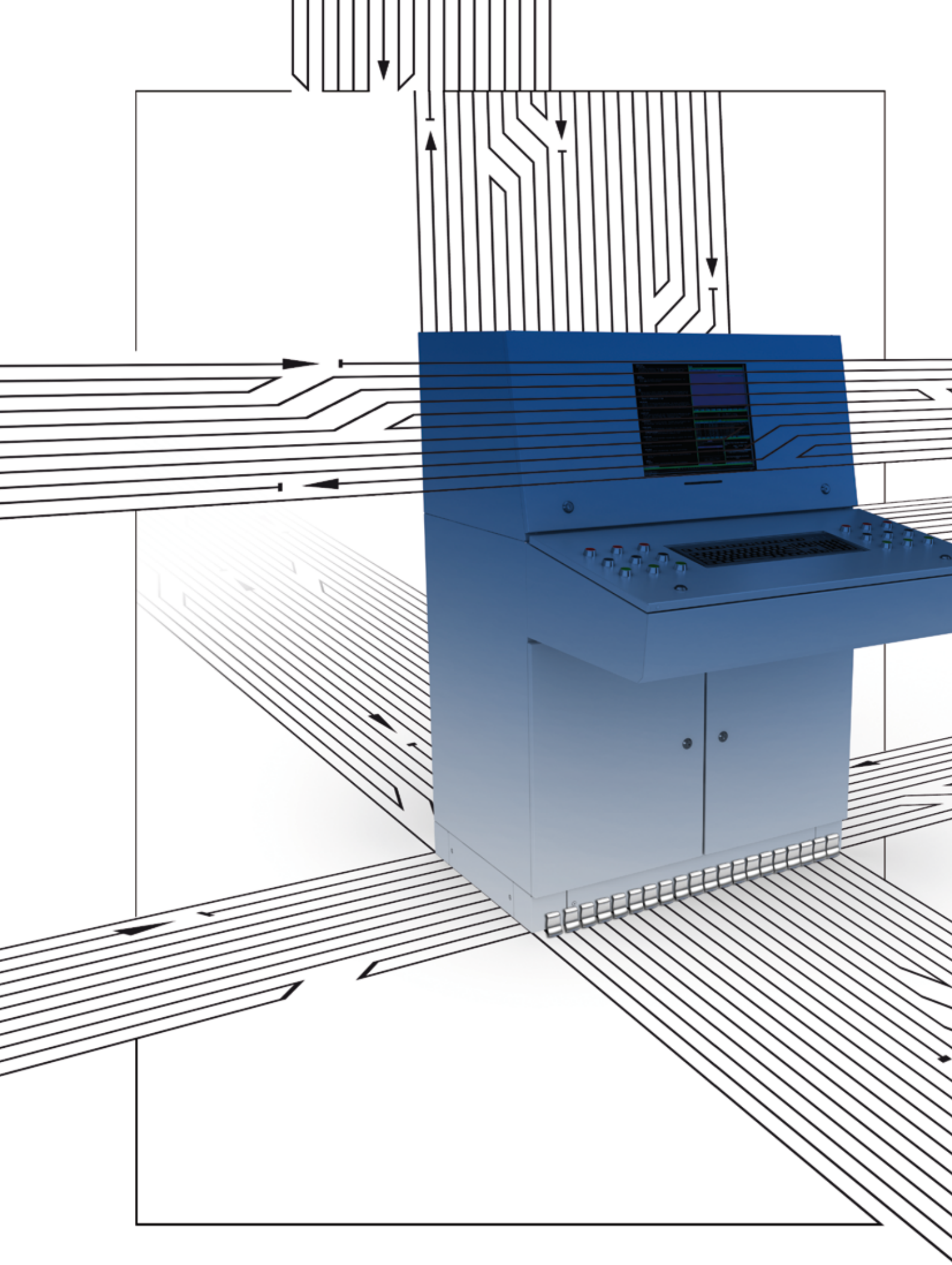

CONTROL DESKS

PSL control desks 348-353
Technical data 348
Design 350
Sample customised control desks 352

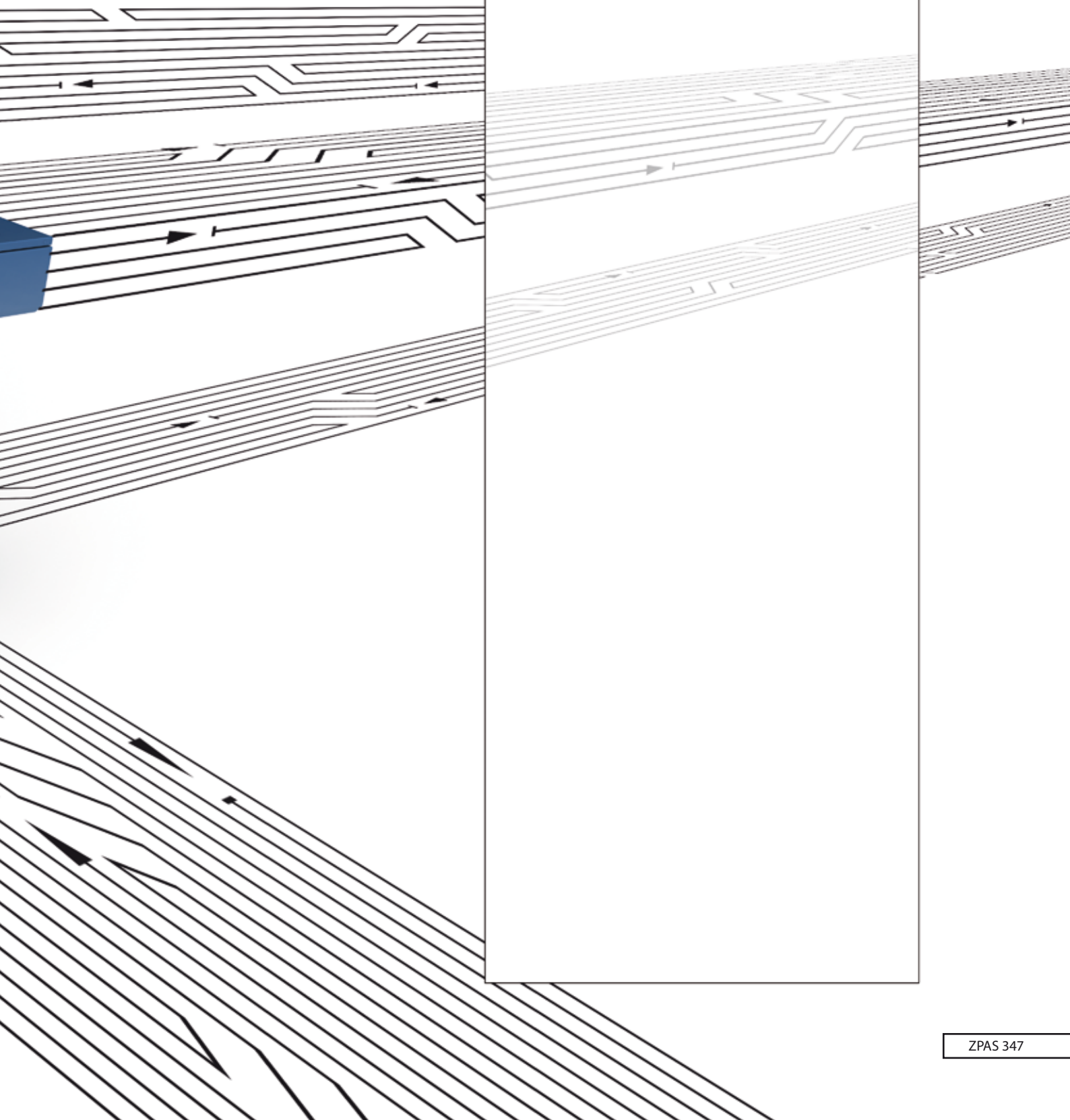

PSL MODULAR CONTROL DESKS

TECHNICAL DATA

TYPE I

TYPE II

TYPE III

TYPE IV

- PSL control desks are designed for mounting control apparatus, monitoring systems, measurement devices and visualisation of production processing.
- They are particularly recommended for operation stations, automated processing lines or machinery rooms.
- Equipped with revolving hinge panel which allows for maintenance of mounted devices.
- Manufactured in 4 configurations and 60 dimensions.
- Option of openings in the hinged panel on customer's request.

TECHNICAL DATA

Material:
Sheet steel

Protection degree:
IP 54 in accordance with EN 60529

Surface finishing:
Body of individual segments, doors, rear panels,
plinth – Epoxide–polyesther powder paint, light grey RAL 7035, recommended for indoor applications
Mounting plates – Al-Zn coated

Note:
On request, the bodies, doors, panels and plinth can be made of stainless sheet steel.

REFERENCE CHART

Width W [mm]	Depth D [mm]	Type of configuration			
		Type I	Type II	Type III	Type IV
		Catalogue numbers of standard PSL desks			
600	450	WZ-0950-01-15-011	WZ-0950-01-30-011	WZ-0950-01-45-011	WZ-0950-01-60-011
	600	WZ-0950-01-14-011	WZ-0950-01-29-011	WZ-0950-01-44-011	WZ-0950-01-59-011
	800	WZ-0950-01-13-011	WZ-0950-01-28-011	WZ-0950-01-43-011	WZ-0950-01-58-011
800	450	WZ-0950-01-12-011	WZ-0950-01-27-011	WZ-0950-01-42-011	WZ-0950-01-57-011
	600	WZ-0950-01-11-011	WZ-0950-01-26-011	WZ-0950-01-41-011	WZ-0950-01-56-011
	800	WZ-0950-01-10-011	WZ-0950-01-25-011	WZ-0950-01-40-011	WZ-0950-01-55-011
1000	450	WZ-0950-01-09-011	WZ-0950-01-24-011	WZ-0950-01-39-011	WZ-0950-01-54-011
	600	WZ-0950-01-08-011	WZ-0950-01-23-011	WZ-0950-01-38-011	WZ-0950-01-53-011
	800	WZ-0950-01-07-011	WZ-0950-01-22-011	WZ-0950-01-37-011	WZ-0950-01-52-011
1200	450	WZ-0950-01-06-011	WZ-0950-01-21-011	WZ-0950-01-36-011	WZ-0950-01-51-011
	600	WZ-0950-01-05-011	WZ-0950-01-20-011	WZ-0950-01-35-011	WZ-0950-01-50-011
	800	WZ-0950-01-04-011	WZ-0950-01-19-011	WZ-0950-01-34-011	WZ-0950-01-49-011
1500	450	WZ-0950-01-03-011	WZ-0950-01-18-011	WZ-0950-01-33-011	WZ-0950-01-48-011
	600	WZ-0950-01-02-011	WZ-0950-01-17-011	WZ-0950-01-32-011	WZ-0950-01-47-011
	800	WZ-0950-01-01-011	WZ-0950-01-16-011	WZ-0950-01-31-011	WZ-0950-01-46-011

MODULAR CONTROL DESKS PSL

TECHNICAL DATA

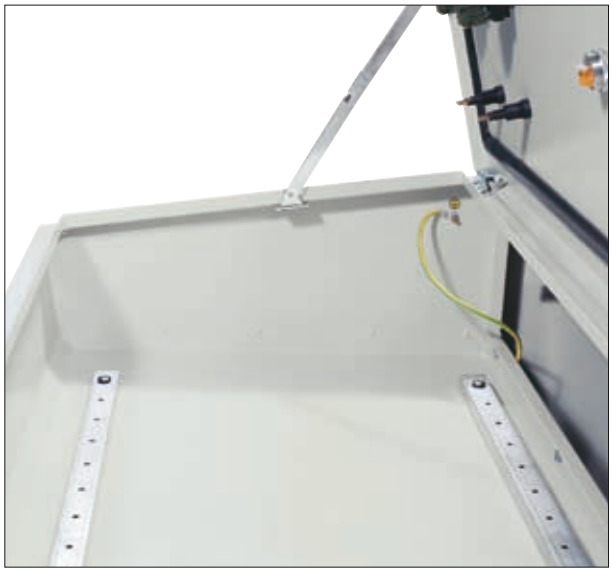

PSL MODULAR CONTROL DESKS

DESIGN

TYPE I

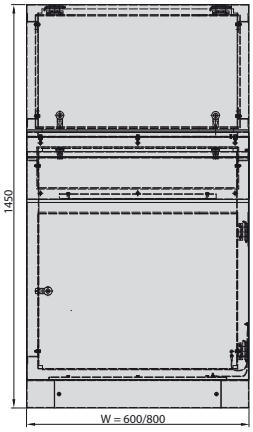

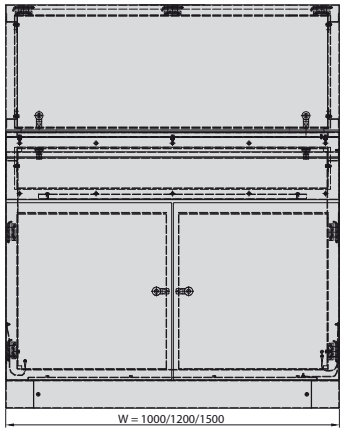

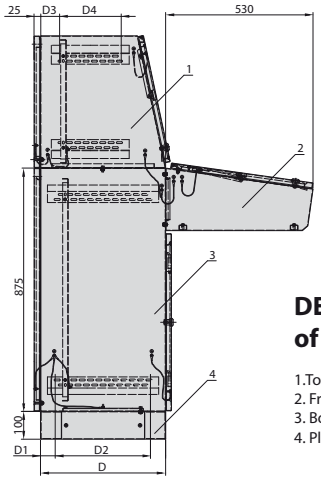

DESIGN of desk type I

1.Top segment (higher version)
2. Front segment
3. Bottom segment
4. Plinth

TYPE II

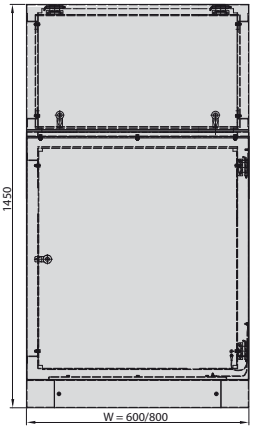

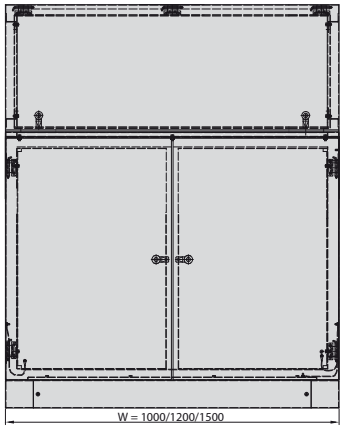

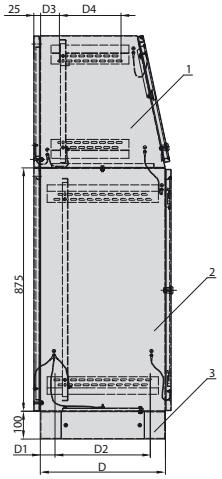

DESIGN of desk type II

1. Top segment (higher version)
2. Bottom segment
3. Plinth

REFERENCE CHART

Desk dimensions [mm]	Width W	600			800			1000	
	Depth D	450	600	800	450	600	800	450	600

		Package	Catalogue numbers							
PSL control desk	Type I	1 pc.	WZ-0950-01-15-011	WZ-0950-01-14-011	WZ-0950-01-13-011	WZ-0950-01-12-011	WZ-0950-01-11-011	WZ-0950-01-10-011	WZ-0950-01-09-011	WZ-0950-01-08-011
	Type II	1 pc.	WZ-0950-01-30-011	WZ-0950-01-29-011	WZ-0950-01-28-011	WZ-0950-01-27-011	WZ-0950-01-26-011	WZ-0950-01-25-011	WZ-0950-01-24-011	WZ-0950-01-23-011
	Type III	1 pc.	WZ-0950-01-45-011	WZ-0950-01-44-011	WZ-0950-01-43-011	WZ-0950-01-42-011	WZ-0950-01-41-011	WZ-0950-01-40-011	WZ-0950-01-39-011	WZ-0950-01-38-011
	Type IV	1 pc.	WZ-0950-01-60-011	WZ-0950-01-59-011	WZ-0950-01-58-011	WZ-0950-01-57-011	WZ-0950-01-56-011	WZ-0950-01-55-011	WZ-0950-01-54-011	WZ-0950-01-53-011

SCOPE OF DELIVERY:

Desks are segment-based structures (see drawings). Individual segments consist of:
- top segment (higher version) – body, door (revolving hinge panel), rear panel, mounting plate;
- top segment (lower version) – body, door (revolving hinge panel);
- bottom segment – body with cable entry in bottom plate blind with blanking plate, front door, rear panel, mounting plate;
- front segment – body, door (revolving hinge panel), two slotted mounting bars.

The desk is placed on a 100 mm plinth.
Elements of the desk are connected with each other by earthing cables.

MODULAR CONTROL DESKS PSL

DESIGN

TYEP III

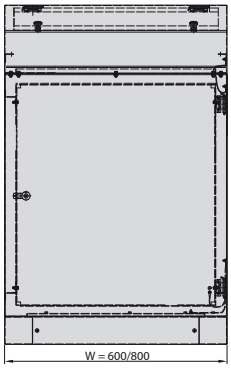

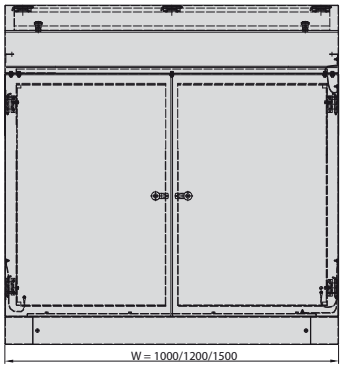

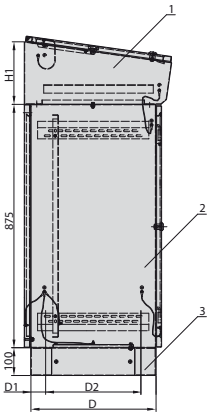

DESIGN of desk type III

1. Top segment (lower version)
2. Bottom segment
3. Plinth

TYPE IV

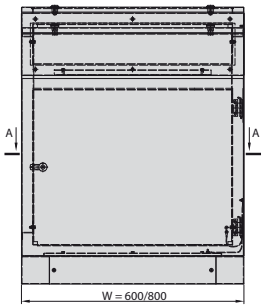

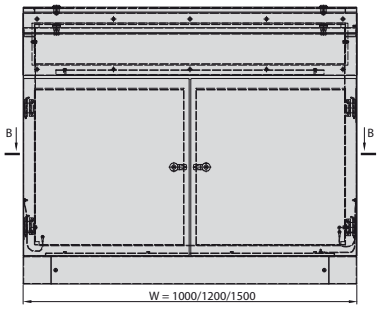

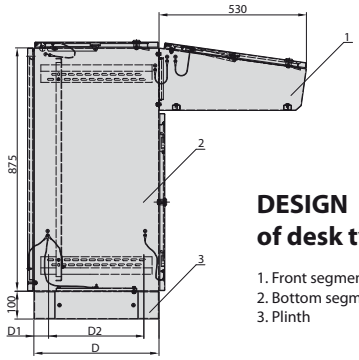

DESIGN of desk type IV

1. Front segment
2. Bottom segment
3. Plinth

A-A section

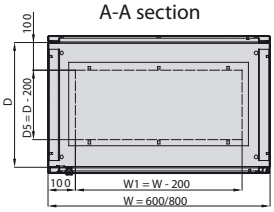

B-B section

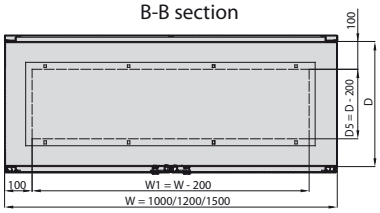

Mounting plate

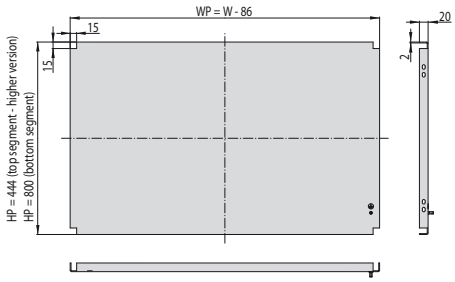

	1200			1500		
800	450	600	800	450	600	800

WZ-0950-01-07-011	WZ-0950-01-06-011	WZ-0950-01-05-011	WZ-0950-01-04-011	WZ-0950-01-03-011	WZ-0950-01-02-011	WZ-0950-01-01-011
WZ-0950-01-22-011	WZ-0950-01-21-011	WZ-0950-01-20-011	WZ-0950-01-19-011	WZ-0950-01-18-011	WZ-0950-01-17-011	WZ-0950-01-16-011
WZ-0950-01-37-011	WZ-0950-01-36-011	WZ-0950-01-35-011	WZ-0950-01-34-011	WZ-0950-01-33-011	WZ-0950-01-32-011	WZ-0950-01-31-011
WZ-0950-01-52-011	WZ-0950-01-51-011	WZ-0950-01-50-011	WZ-0950-01-49-011	WZ-0950-01-48-011	WZ-0950-01-47-011	WZ-0950-01-46-011

ORDERING INSTRUCTION

For ordering PSL desks refer to catalogue numbers from the chart.

Dimensions [mm]					
D	D1	D2	D3	D4	H1
450	60	330	70	210	225
600	60	480	70	330	262
800	55	690	70	360	290

PSL MODULAR CONTROL DESKS

SAMPLE CUSTOMISED CONTROL DESKS

PSL control desk set on castors, equipped with air vents, rack made of mounting bars, personal computer, UPS, barcode reader, laser printer and WiFi antenna.

MODULAR CONTROL DESKS PSL

SAMPLE CUSTOMISED CONTROL DESKS

PSL control desk equipped with a industrial keyboard

PSL control desk equipped with a control system according to the documentation provided by the customer

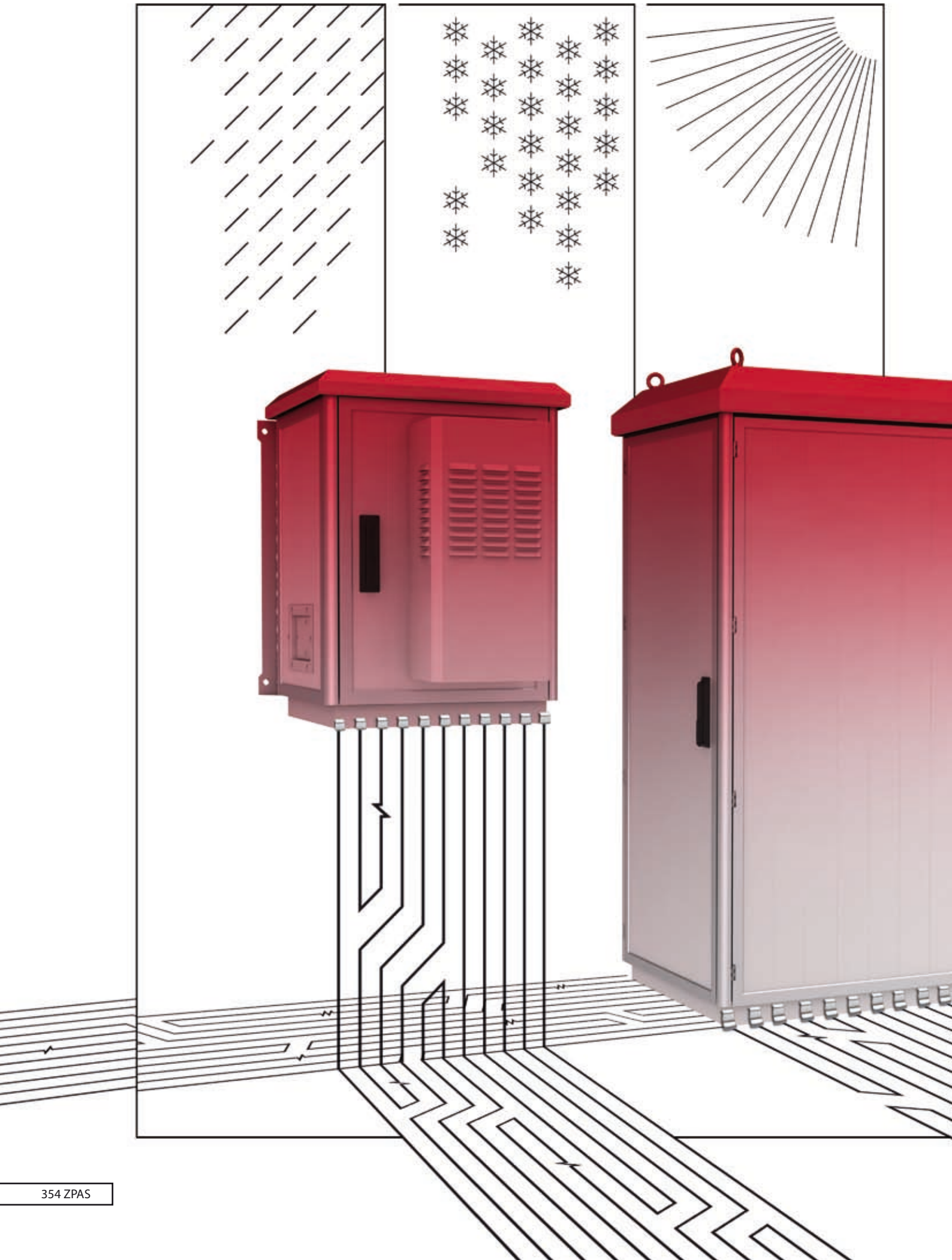

OUTDOOR CABINETS

General information 356
References 357
Design 358-363
Technical data 358
Framework 359
Doors, side shields 360
Standard roof 361
Roof in special configuration 361
Dimensions 362
Ventilation 364-367
Air-conditioning 368-369
Tests 370-374
Climatic tests 370
Protection degree IP tests 371
Screening efficiency tests 372
Acoustic tests 373
Supplementary accessories 375-386
Swing frame 375
Shelves 376
Partition and cable entry 377
Micro switch and door stop 378
Handles for mounting of cabinet 379
Power supply maintenance systems 380
Thermostat 383
Panel for fan control 383
Monitoring system and access control in SZD cabinets 384
Insulating base 385
Voltage distribution panels 385
Heater 385
Concrete foundations 386
Frame for concrete 386
SZD cabinets in accordance with EMC standard 387
Appliances in subscribers' access systems 388-390
Battery section 388
Chamber of devices 389
Distribution section 390
Energy section 390
SZD cabinets for power industry 391
SZD cabinets adapted for power supply systems 393
Extension of outdoor cabinets 394
Custom solutions 397
Cabinets made of aluminium sheet 399
Cabinets made of Al-Zn coated steel sheet 400
Cabinets made of stainless steel sheet 401

GENERAL INFORMATION

In the period of last few years, the increase of telephone-users and density of ducts surrounding cities which are endangered on easy damage, forces the manufacturers of telecommunication links to work out and use ducts under the earth-surface. Together with the increase of transferring wider frequency band, it appeared that there are some difficulties with providing appropriate quality of transmission with using copper wires. Wider pass bands in fast networks, like Gbit Ethernet or ATM, means necessity of assistance the copper wires with complicated electronic systems. That is the reason why fibre optics became alternative solution to copper wires.

Not mentioning creation of brand-new networks, one of the biggest tasks for telecommunication network is protection of already made investments and re-usage of the biggest possible part of already existing cable-networks. This possibility is given by access systems. Access systems enable gradual changing distributive copper wires with fibre optics. This solution allows using existing exchange lines not only for transmission telephone and ISDN services, but also for transmission 2Mb/s flux with using digital exchange line technology.

The technology of access exchange guarantees updating existing transmission network with usage of valuable electronic equipment. In order to lower the costs of modernisation, the most common solution is joining old part of installation (copper wires) with new one (fibre optic cables) in outdoor access cabinets (like SZD).

The main task of outdoor access cabinet is full protection of installed equipment. The cabinet fulfils the requirements of protection against negative influence of environment (rain and snow falls, sun, dust etc) and vandalism. Another very important task of SZD cabinets is providing specified climatic conditions which depend on installed equipment.

The construction of SZD cabinet enables optional arrangement of inside equipment. It makes possible to use SZD cabinets not only in access systems, but also in each case where the protection of outdoor equipment working in extreme conditions is very important. SZD cabinets produced by ZPAS-NET have been already used in telecommunication industry, on ships, platforms, stamping press and intermediate pumping gas stations, heat and power stations, power industry plants, refineries, cement plants, for protection of machinery for outdoor lightening operating etc.

REFERENCES

ZPAS-NET, as the manufacturer of outdoor cabinets, co-operates with well-known companies like: Aster City, Clearwire, Delta Energy Systems, DGT, Eltek Polska, Energis Polska, Ericsson, Keymile, Molex (Norway), Multimedia, Netia, Nokia Siemens, Polkomtel, Sprint, Sunlight Systems (Greece), Teletra Komtrans, Telzas, TP SA.

DESIGN

TECHNICAL DATA

Material:

Cabinets framework	- aluminium profile,
Side shields and doors	- aluminium profile,
Roof (internal mantle)	- 1.5 mm thick aluminium sheet,
Roof (external mantle) and plinth	- alternatively stainless steel sheet, Al-Zn coated (aluzinc) steel sheet or aluminium sheet.

Surface finishing:

- Aluminium profiles of the framework and aluminium frames of shield and doors:
  Anodised (in EMC version chromate coated and powder painted in RAL 7035)
- Aluminium profiles of shield and doors:
  Chromate coated and powder painted in RAL 7035
- Internal mantle of the roof:
  Natural aluminium
- Plinth and external mantle of the roof:
  Powder painted in RAL 7035

In EMC version of the cabinet conductivity between each elements of the construction in esured.

Protection Degree:

Standard cabinets have got protection degree IP 54 in accordance with EN 60529. If required it can be increased up to IP 65.

Note:

ZPAS reserves the rights to implement changes in construction. All technical solutions used in construction of SZD cabinets are reserved in Patent Office of Poland.

DESIGN

Framework

Supporting structure of the cabinet is the framework made of aluminium profiles, which are joint together by adaptors. In profiles there are special ducts, which enable the assembly of swing frame or optional creation of supporting structure for mounting equipment.
The framework of the cabinet is in standard set on the plinth. The height of the plinth depends on customer's request: from 40 to 300 mm.

Framework of SZD cabinet set on the plinth

A-A section

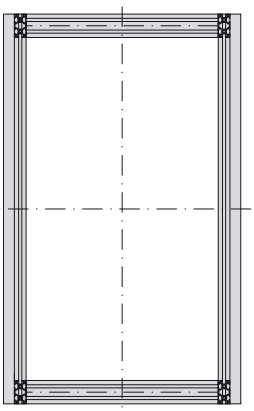

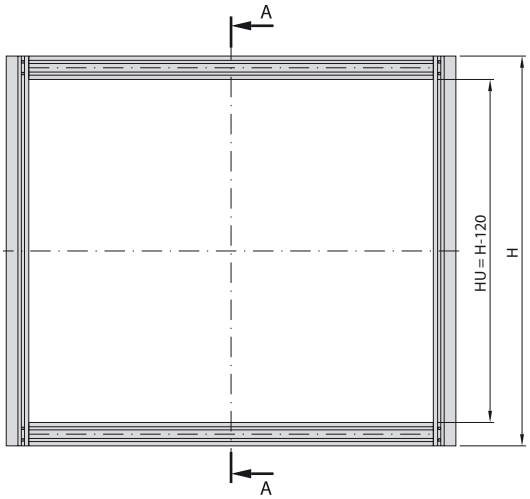

Profile connection

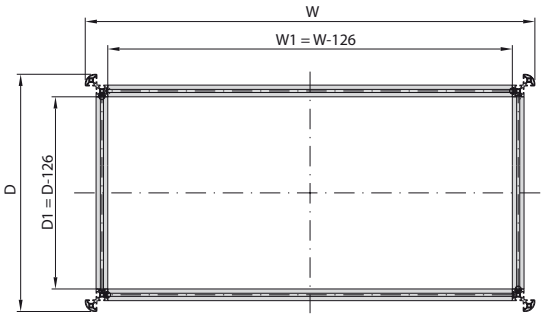

H - height of the framework
HU - useful height of the cabinet
W - width of the framework
W1 - useful width
D - depth of the framework
D1 - useful depth

DESIGN

Doors, side shields

Doors and side shields of SZD cabinets are made of aluminium rail-profiles which are fastened together. The aluminium profiles make double ventilation wall. In the cabinet there are mounted two-point rod-latch locks. The door handle is made of zinc and aluminium alloy. On customer's request it is possible to have optional type of patent insert (ABLOY, KABA, EMKA, etc). It is possible to make special opening for temporary cable entry (e. g. from outside power supply unit).

Standard roof for SZD

Standard roof for SZD cabinets is made of two mantles of 1.5 mm thick sheet steel. Between the mantles there is a gap, which enables to carry away accumulated condensation water.

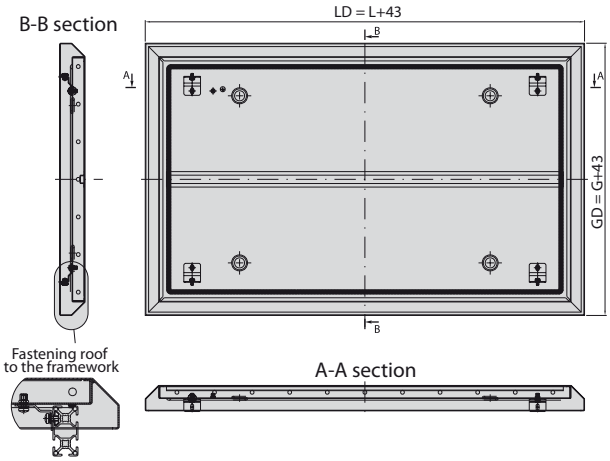

Roof in special configuration

When it is necessary to cool the cabinet not only by ventilating through side shields and doors but also additional cooling system, it is possible to use special roof made of three mantles of sheet steel. This solution creates two air chambers in one of them it is possible to fasten fan units which increase the airflow.

Applying two-chambers roof causes, that the total height of the cabinet is increased by 100 mm.

Additionally, it is possible to fix lifting eyes into the roof.

A part of roof in special configuration

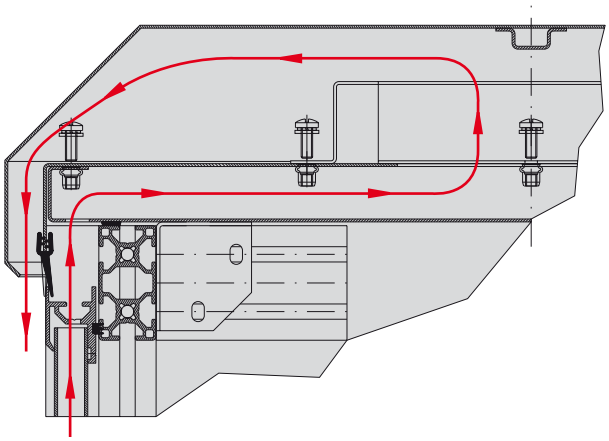

DESIGN

Dimensions of SZD cabinets

The SZD cabinet has a modular design. The main part of the cabinet is made of panels (which are fastened by latches) and aluminium profiles. Both panels and profiles can be cut to any length. This type of design makes it possible to achieve the desired cabinet dimensions. **Every cabinet is designed and manufactured on individual request (together with interior installation – it is possible to create all types of partitions and supporting structures of the cabinet)**.

As a standard, the technology allows for the manufacture of cabinets with single or double leaf doors.

STANDARD DIMENSIONS OF CABINETS WITH SINGLE LEAF DOOR

External width W [mm]	Internal width W1 [mm]	External depth D [mm]	Internal depth D1 [mm]
409	283	409	283
509	383	509	383
609	483	609	483
709	583	709	583
809	683	809	683
1009	883	1009	883

STANDARD DIMENSIONS OF CABINETS WITH DOUBLE LEAF DOOR

External width W [mm]	Internal width W1 [mm]	External depth D [mm]	Internal depth D1 [mm]
1154	1028	409	283
1254	1128	509	383
1354	1228	609	483
1453	1328	709	583
1554	1428	809	683
1654	1528	1009	883

MULTI-DOOR CABINETS

On request, we can deliver multi-door cabinets.

DESIGN

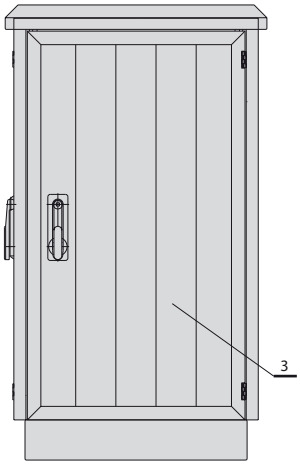

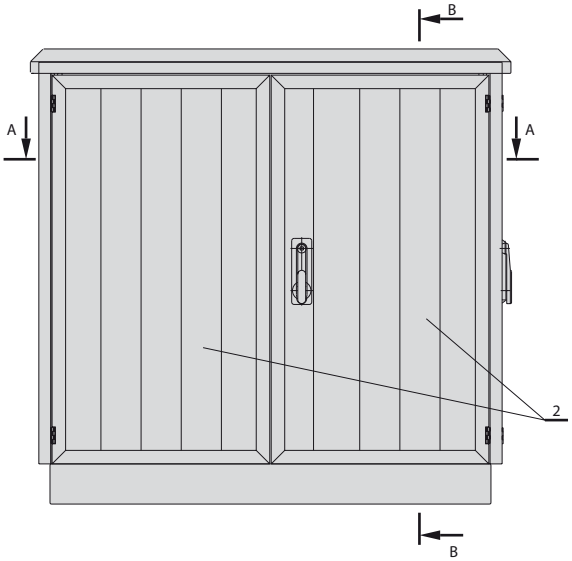

B-B section

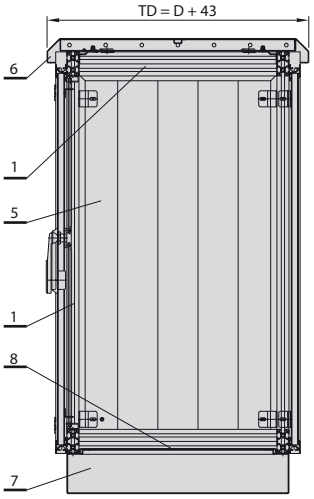

Front view without the door

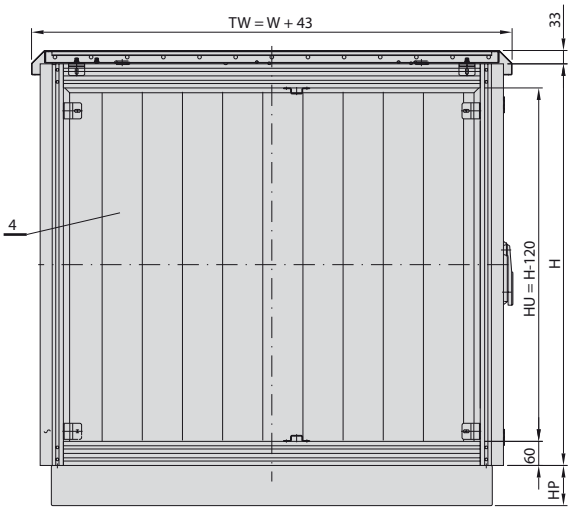

Height of the plinth HP - by customer's needs

DESIGN

1. Framework
2. Two-wings front door
3. Side door
4. Rear shield
5. Side shield
6. Roof
7. Plinth
8. Bottom plate

A-A section

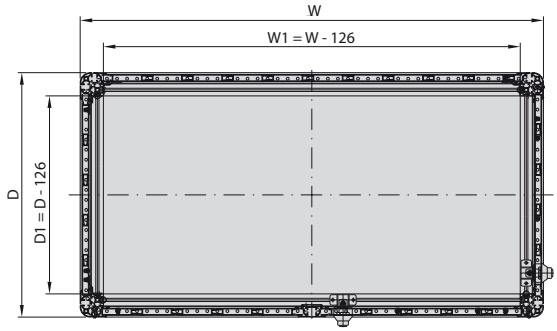

TD - total depth of the cabinet
D - depth of the framework
D1 - useful depth of the cabinet
TW - total width of the cabinet
W - width of the framework
HP - height of the plinth
W1 - useful width of the cabinet

Note:
The cabinets are available in any height.
For non-standard cabinet sizes, the way of calculating external dimensions is shown in the illustration.

VENTILATION

Fan unit with six cooling fans and thermostat

Ventilation with forced internal and free external air circulation

Fan units are mounted inside SZD cabinet in order to shorten time of carrying away heat dissipation emitted by equipment installed in the cabinet. Fan units cause faster air movement inside the cabinet and in the cabinet's walls. In case of low temperature the system of heaters joint with thermostats is applied. Above solutions enable failure-free operation of access systems.

DIAGRAM OF AIR FLOW

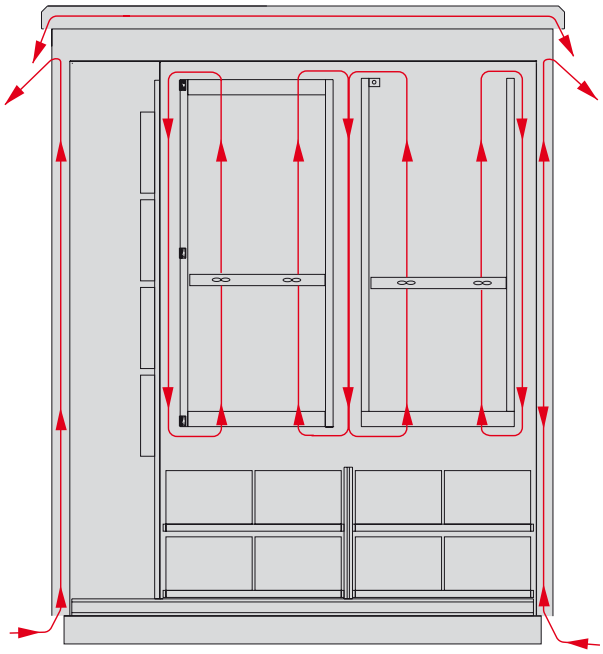

PICTORIAL DIAGRAM OF SUPPLYING FAN UNITS AND HEATERS

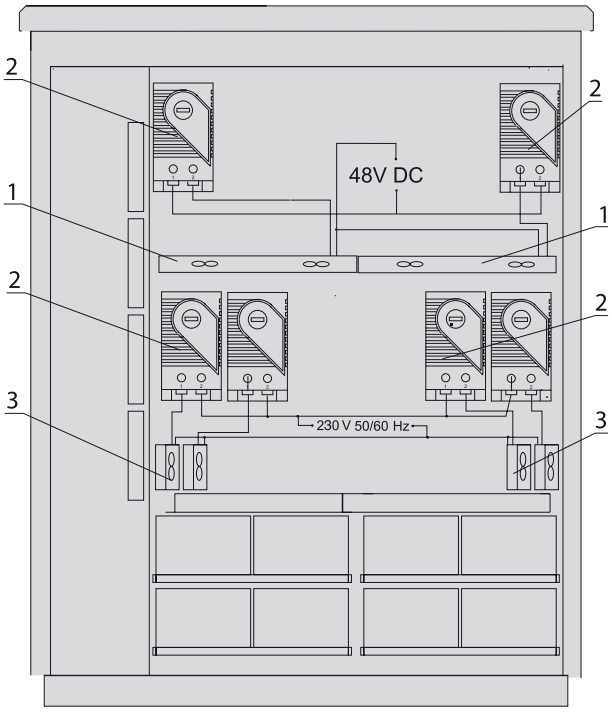

AIR FLOW IN STANDARD ROOF

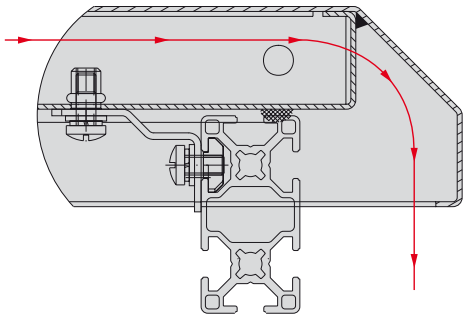

DESIGN

1. Fan unit
2. Thermostats
3. 400 W heaters with fan 220 V, 50/60 Hz

Ventilation with forced internal and external air circulation

In cabinets which are endangered of strong solar radiation, it is recommended to use ventilation with double air circulation. In this solution, air circulates inside the cabinet and additionally flows between the double walls of the cabinet. Moreover, circulation of external air is forced by fan units mounted in the roof. In case of low temperature the system of heaters joint with thermostats is applied. Above solutions enable failure-free operation of access systems.

Fan unit with two cooling fans

DIAGRAM OF AIR FLOW

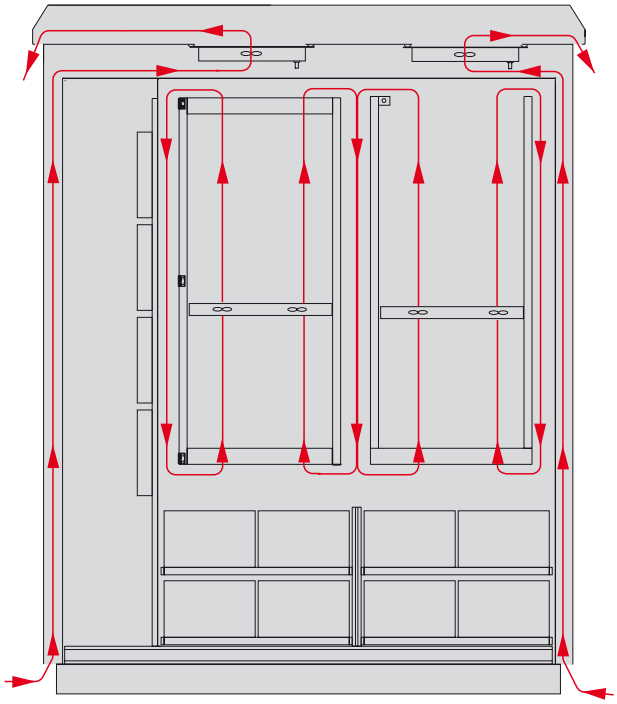

AIR FLOW IN NON-STANDARD ROOF

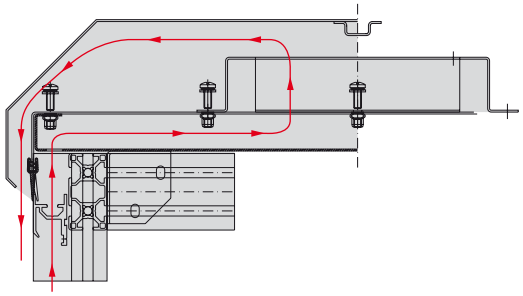

PICTORIAL DIAGRAM OF SUPLYING FAN UNITS, ROOF VENTILATORS AND HEATERS

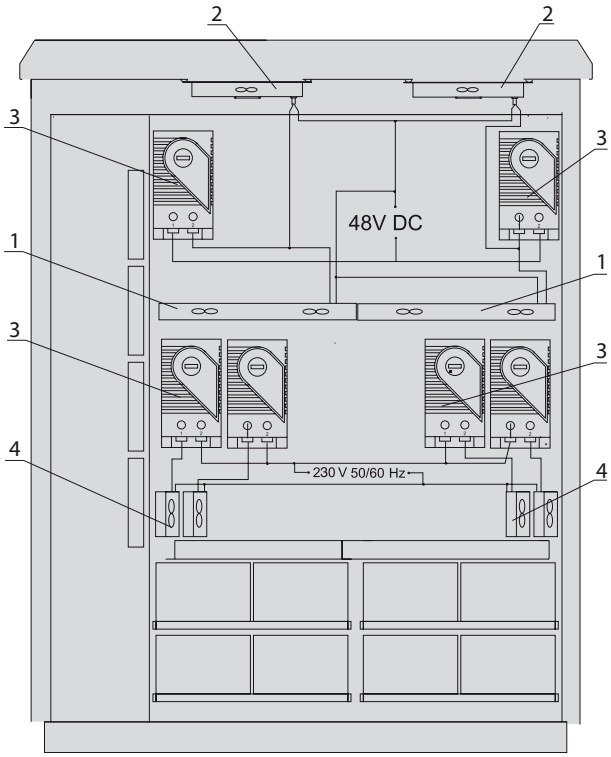

DESIGN

1. Fan unit
2. Roof ventilators
2. Thermostats
3. 400 W heaters with fan 220 V, 50/60 Hz

VENTILATION

PICTORIAL DIAGRAM OF AIR CIRCULATION IN THE CABINET WITH DIRECT VENTING

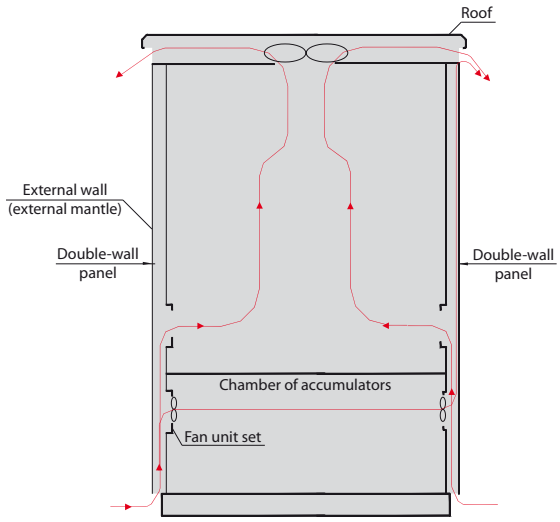

Ventilation based on use of heat exchanger and direct venting

In order to intensify the cooling process in cabinets with installed equipment with high heat dissipation, there is solution based on cross heat exchanger. Heat exchanger is a type of radiator, where there are two air flows: warm from the inside of the cabinet (radiator's plates collect heat) and second from the outside of the cabinet (cooled by exchanger). Cross system of the heat exchanger enables to retain tightness of the cabinet and external and internal air flows do not mix together.

Another solution is direct venting of the cabinet, which is used when it is necessary to carry away lots of heat dissipation. In cabinet's roof or on the door there are mounted fans which pull external air (through double wall and filters system). External air goes through appliances which emit heat and is carried away outside by roof or perforations on the doors.

PICTORIAL DIAGRAM OF AIR CIRCULATION IN THE CABINET WITH HEAT EXCHANGER MOUNTED ON THE ROOF

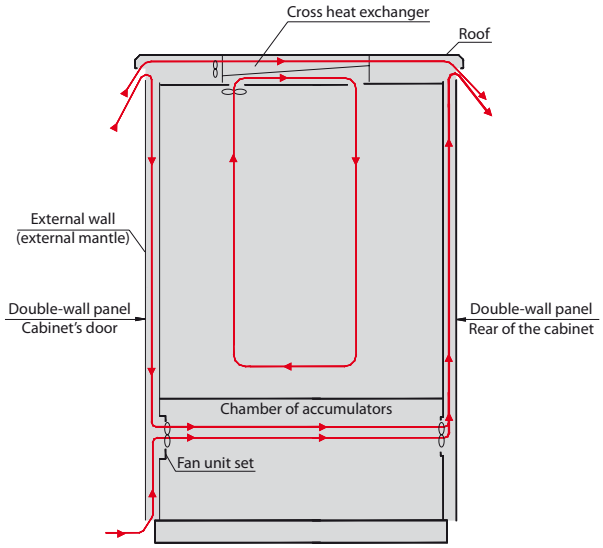

PICTORIAL DIAGRAM OF AIR CIRCULATION IN THE CABINET WITH HEAT EXCHANGER MOUNTED ON THE DOOR

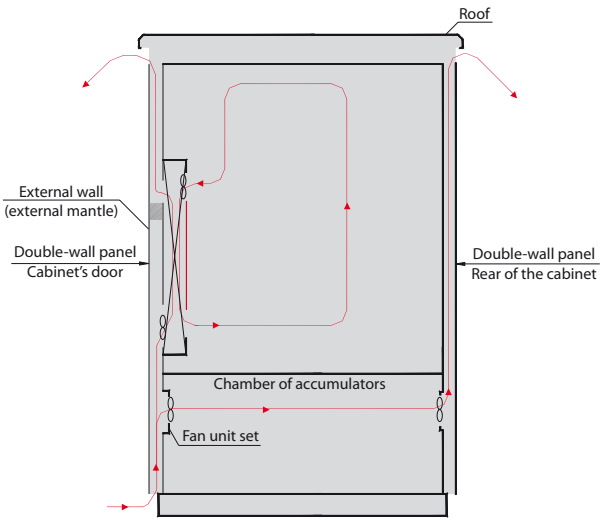

VENTILATION

Cabinet with heat exchanger mounted in the door

Cabinet with heat exchanger mounted in the roof

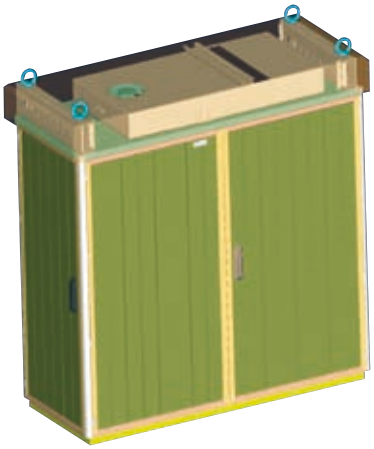

Cabinet with direct venting

AIR-CONDITIONING

Air conditioner partially flush into the cabinet

Air conditioned SZD cabinets

Air conditioners are used when the required temperature inside of the cabinet is lower than ambient temperature. The power of air conditioners is selected according to pre-set climatic conditions, heat dissipation by active equipment and dimensions of the cabinet. On individual customer's request the air conditioners can be fixed inside or outside of the cabinet. In case of inside installation, they are usually fixed on the doors or side shields, what enables easy service access.

Air conditioners fixed inside of the cabinet

AIR-CONDITIONING

Air conditioners fixed outside of the cabinet

TESTS

Climatic tests

SZD cabinets equipped with access systems of different suppliers (Siemens, Ericsson, DGT, Ascom) have been climatic tested at Laboratory of Telecommunications Accessories and Devices Research in Szczecin. SZD cabinet was placed in climatic chamber, were it was first tested for 12 hours in temperature -33 °C and then for 12 hours in temperature +40 °C.

Below, there are some climatic diagrams.

AVERAGED TEMPERATURES IN ELECTRONIC CHAMBER AND CHAMBER OF ACCUMULATORS' BATTERY

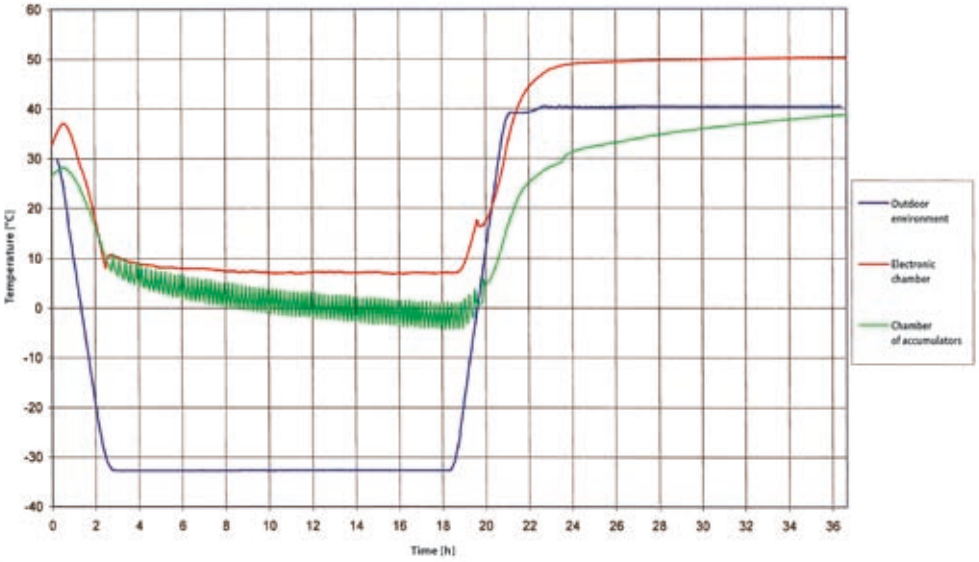

AVERAGED RUN OF TEMPERATURE IN ELECTRONIC CHAMBER AND CHAMBER OF ACCUMULATORS' BATTERY WITH TESTS OF FAILURE POWER SUPPLY OF THE CABINET

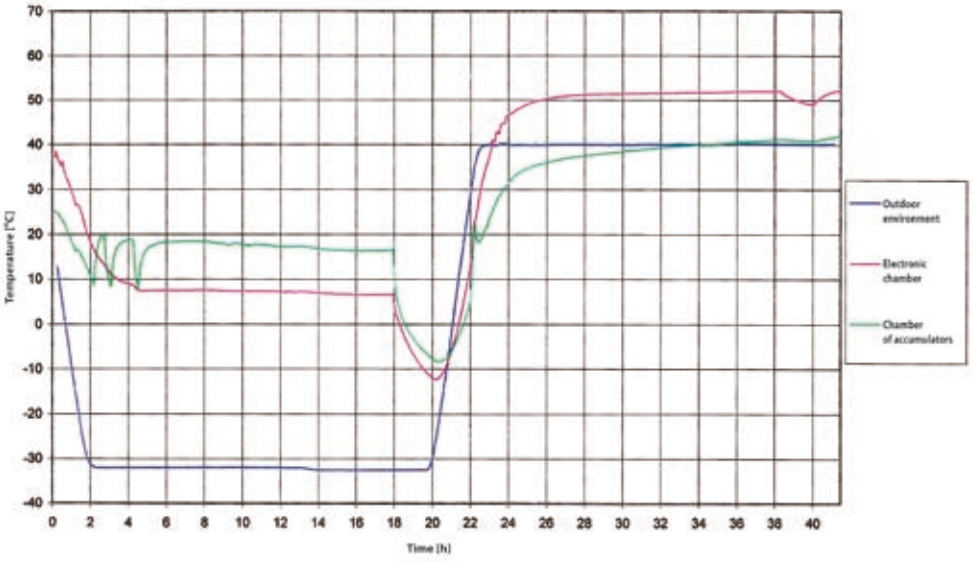

Protection degree IP tests

SZD cabinets have been tested for protection degree, IP rated. Measurements have been made in following sequences:
- measurement of IP degree
- vibration test on the shaker
- next measurement of IP degree

Both tests (before and after vibration) proved IP 65 degree

The tests were carried out in two independent laboratories:
- Laboratory of Telecommunications Accessories and Devices Research in Szczecin
- ZPBE Energo Pomiar

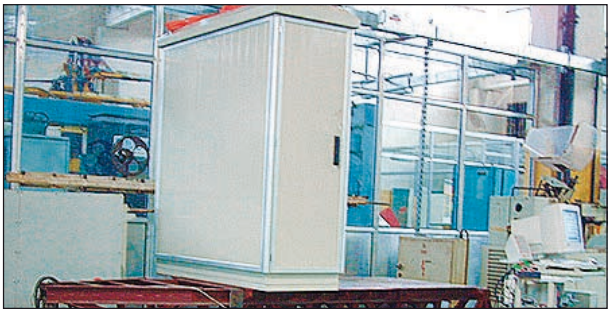

POLISH CERTIFICATES OF IP 65 PROTECTION

ZPBE ENERGOPOMIAR Sp. z o.o. Zakład Techniki i Gospodarki Cieplnej i Elektroenergetycznej ul. Gen. J. Sowińskiego 3 44-101 Gliwice tel. (0-32) 237 63 00

ŚWIADECTWO SPRAWDZENIA
STOPNIA OCHRONY IP-65 SZAFY DOSTĘPOWEJ TYPU SZD - JEDNODRZWIOWEJ
Dział Automatyki i Pomiarów

Numer: 4431/00
Data wydania: 21.03.2000r
Strona / stron: 1 / 1

1. CHARAKTERYSTYKA TECHNICZNA

Przedmiot sprawdzenia: Stopień ochrony IP szafy dostępowej typu SZD - jednodrzwiowej wg PN-92/E-08106
Producent: Zakład Produkcji Automatyki Sieciowej S.A. w Przygórzu
Oznaczenie szafy: typ SZD

2. ZLECENIODAWCA:
Zakład Produkcji Automatyki Sieciowej S.A. w Przygórzu
57-431 WOLIBÓRZ

3. WARUNKI SPRAWDZENIA

Zakres sprawdzenia: oględziny zewnętrzne, sprawdzenie zgodności wymiarów z dokumentacją techniczną, sprawdzenie stopnia ochrony przed dostępem do części niebezpiecznych oznaczone pierwszą charakterystyczną cyfrą 6 - Tablica 1 wg PN-92/E-08106, sprawdzenie stopnia ochrony przed obcymi ciałami stałymi oznaczone pierwszą charakterystyczną cyfrą 6 - Tablica 2 wg PN-92/E-08106, sprawdzenie stopnia ochrony przed wodą oznaczone drugą charakterystyczną cyfrą 5 - Tablica 3 wg PN-92/E-08106
Wybór szaf do badań: szafę wybrano losowo z przedmiotowej partii
Warunki środowiskowe: temperatura otoczenia 20 °C, wilgotność względna 50%, ciśnienie barometryczne 970 kPa, temperatura wody wodociągowej 18 °C
Inne dane: szafa dostępowa typu SZD - jednodrzwiowa nr fabryczny 1, nr dokumentacji technicznej 1319-1-3 o wymiarach: szerokość 750 mm, głębokość 750 mm, wysokość 1365 mm, ciężar 95 kg

4. WYMAGANIA

4.1 PN-92/E-08106 - Stopnie ochrony zapewniane przez obudowy (KOD IP)
4.2 Specyfikacja zamawiającego

5. WYNIK SPRAWDZENIA

Stwierdza się, że szafa dostępowa typu SZD - jednodrzwiowa, spełnia stopień ochrony IP-65 wg PN-92/E-08106

Badania wykonał: J. Hibner — Kierownik Zakładu: mgr inż. A. Łupa — Dyrektor Zakładu: mgr inż. J. Penar

ZPBE ENERGOPOMIAR Sp. z o.o. Zakład Techniki i Gospodarki Cieplnej i Elektroenergetycznej ul. Gen. J. Sowińskiego 3 44-101 Gliwice tel. (0-32) 237 63 00

ŚWIADECTWO SPRAWDZENIA
STOPNIA OCHRONY IP-65 SZAFY DOSTĘPOWEJ TYPU SZD - DWUDRZWIOWEJ
Dział Automatyki i Pomiarów

Numer: 4432/00
Data wydania: 21.03.2000r
Strona / stron: 1 / 1

1. CHARAKTERYSTYKA TECHNICZNA

Przedmiot sprawdzenia: Stopień ochrony IP szafy dostępowej typu SZD - dwudrzwiowej wg PN-92/E-08106
Producent: Zakład Produkcji Automatyki Sieciowej S.A. w Przygórzu
Oznaczenie szafy: typ SZD

2. ZLECENIODAWCA:
Zakład Produkcji Automatyki Sieciowej S.A. w Przygórzu
57-431 WOLIBÓRZ

3. WARUNKI SPRAWDZENIA

Zakres sprawdzenia: oględziny zewnętrzne, sprawdzenie zgodności wymiarów z dokumentacją techniczną, sprawdzenie stopnia ochrony przed dostępem do części niebezpiecznych oznaczone pierwszą charakterystyczną cyfrą 6 - Tablica 1 wg PN-92/E-08106, sprawdzenie stopnia ochrony przed obcymi ciałami stałymi oznaczone pierwszą charakterystyczną cyfrą 6 - Tablica 2 wg PN-92/E-08106, sprawdzenie stopnia ochrony przed wodą oznaczone drugą charakterystyczną cyfrą 5 - Tablica 3 wg PN-92/E-08106
Wybór szaf do badań: szafę wybrano losowo z przedmiotowej partii
Warunki środowiskowe: temperatura otoczenia 20 °C, wilgotność względna 50%, ciśnienie barometryczne 970 kPa, temperatura wody wodociągowej 18 °C
Inne dane: szafa dostępowa typu SZD - dwudrzwiowa nr fabryczny 2, nr dokumentacji technicznej 1171-1-3 o wymiarach: szerokość 1600 mm, głębokość 655 mm, wysokość 1185 mm, ciężar 180 kg

4. WYMAGANIA

4.1 PN-92/E-08106 - Stopnie ochrony zapewniane przez obudowy (KOD IP)
4.2 Specyfikacja zamawiającego

5. WYNIK SPRAWDZENIA

Stwierdza się, że szafa dostępowa typu SZD - dwudrzwiowa, spełnia stopień ochrony IP-65 wg PN-92/E-08106

Badania wykonał: J. Hibner — Kierownik Zakładu: mgr inż. A. Łupa — Dyrektor Zakładu: mgr inż. J. Penar

TESTS

Screening efficiency tests

SZD cabinet was subjected to screening efficiency tests at the Telecommunication and Acoustic Laboratory of the Institute of Technology in Wrocław. On the basis of measurements, the cabinet's screening efficiency was specified in the magnetic field's frequency range of 100 kHz up to 1000 MHz:

a) Screening efficiency in the frequency range of 100 kHz up to 30 MHz
- for horizontal polarisation is included in the following limits: from 15 dB to 26 dB (average value varies from 18 dB to 22 dB),
- for vertical polarisation is included in the following limits: from 21 dB to 44 dB (average value varies from 32 dB to 40 dB).

b) Screening efficiency in the frequency range of 30 MHz up to 1000 MHz
- for horizontal polarisation is included in the following limits: from 55 dB to 5 dB (average value varies from 52 dB to 19 dB),
- for vertical polarisation is included in the following limits: from 65 dB to 23 dB (average value varies from 59 dB to 29 dB).

CABINET'S SCREENING EFFICIENCY FOR THE HORIZONTAL COMPONENT OF THE ELECTRIC FIELD

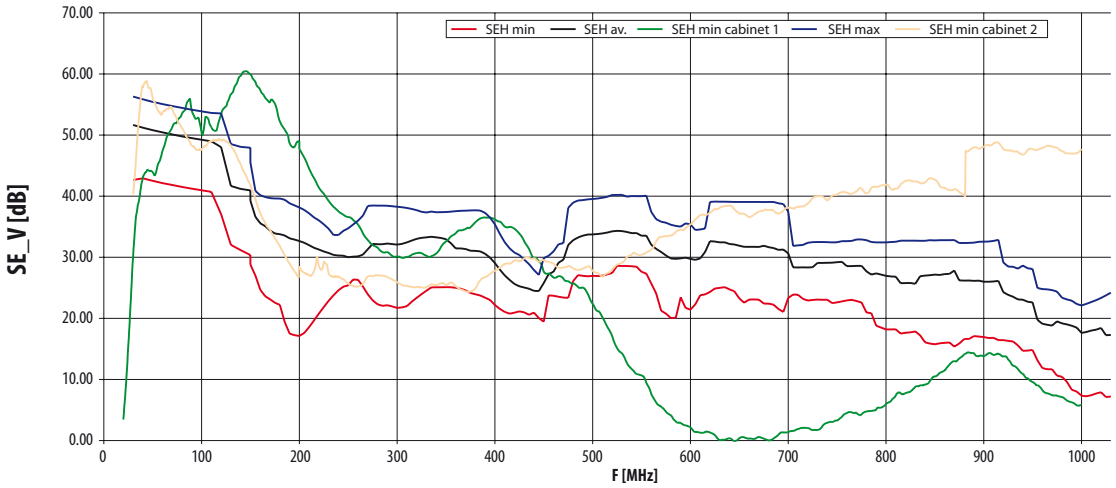

CABINET'S SCREENING EFFICIENCY FOR THE VERTICAL COMPONENT OF THE ELECTRIC FIELD

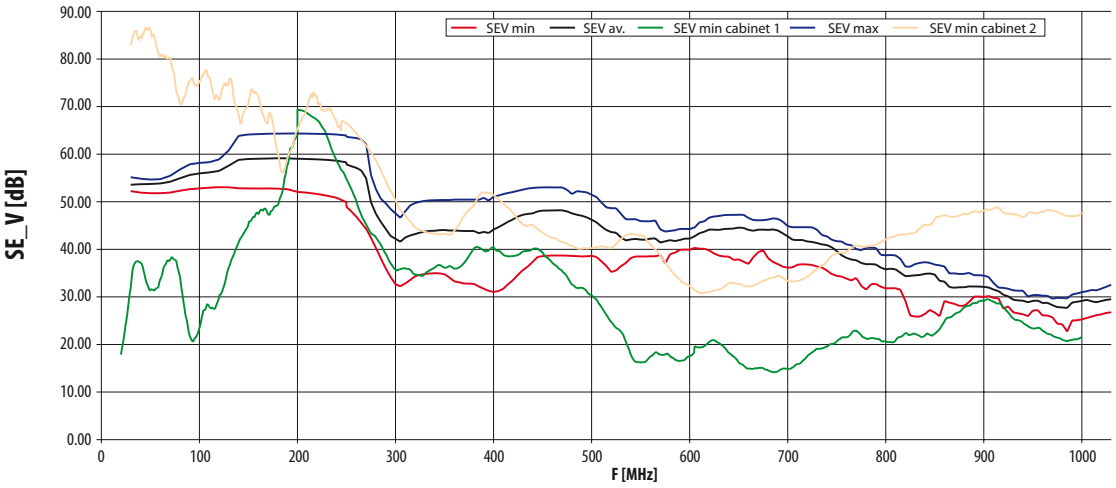

Acoustic tests

The SZD cabinet with specified quantity of fans and heaters (in accordance with the below drawing) have been tested for checking the noise emission of the cabinet.

PLACES OF FANS IN TESTED CABINET

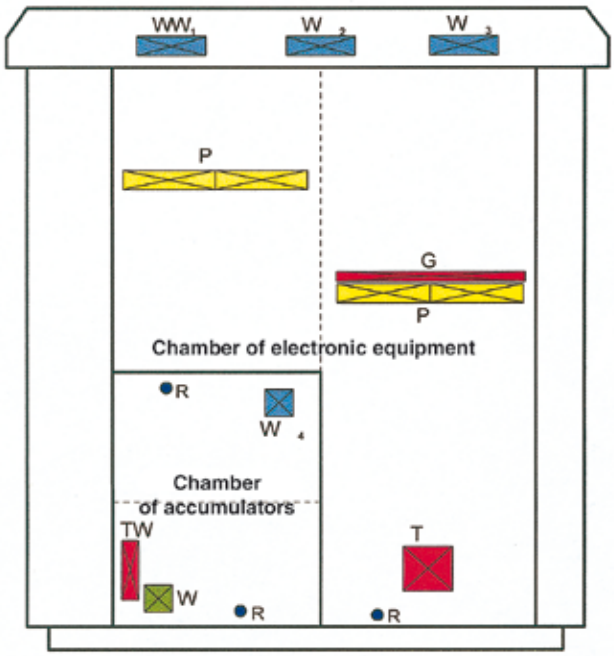

WW_1, WW_2, WW_3 - exhaust fans, placed symmetrical in the upper part of the cabinet under the roof
WW_4 - exhaust fan
WN - downcast fan
PN - fan units mixing air inside the cabinet
TW - thermo fans
G - heater of transmission shelf
R - temperature controllers

Example of sound diffusion in front and rear part of SZD cabinet.

Sound diffusion for 63 Hz

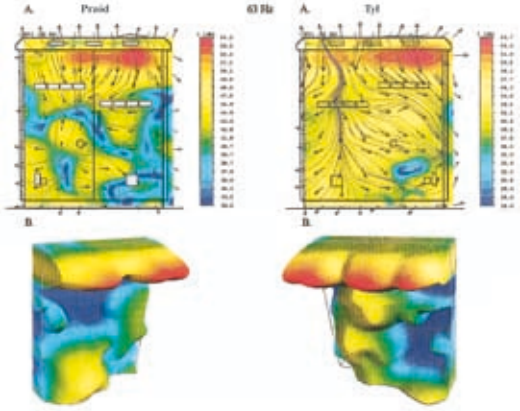

Sound diffusion for 500 Hz

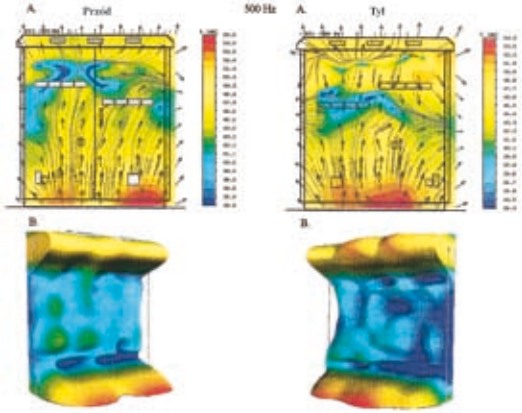

Sound diffusion for 1000 Hz

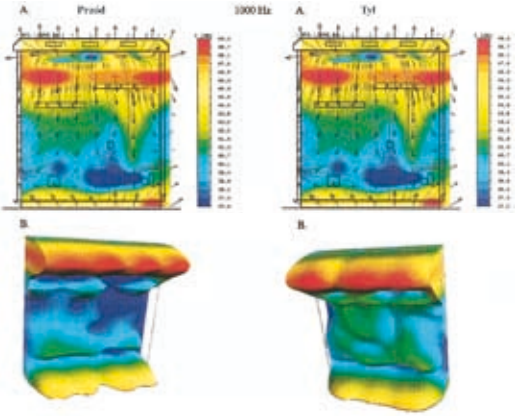

TESTS

Acoustic tests

THE LEVEL OF NOISE EMITTED BY TESTED SZD CABINET (AVERAGE VALUES FROM 11 MEASURING POINTS)

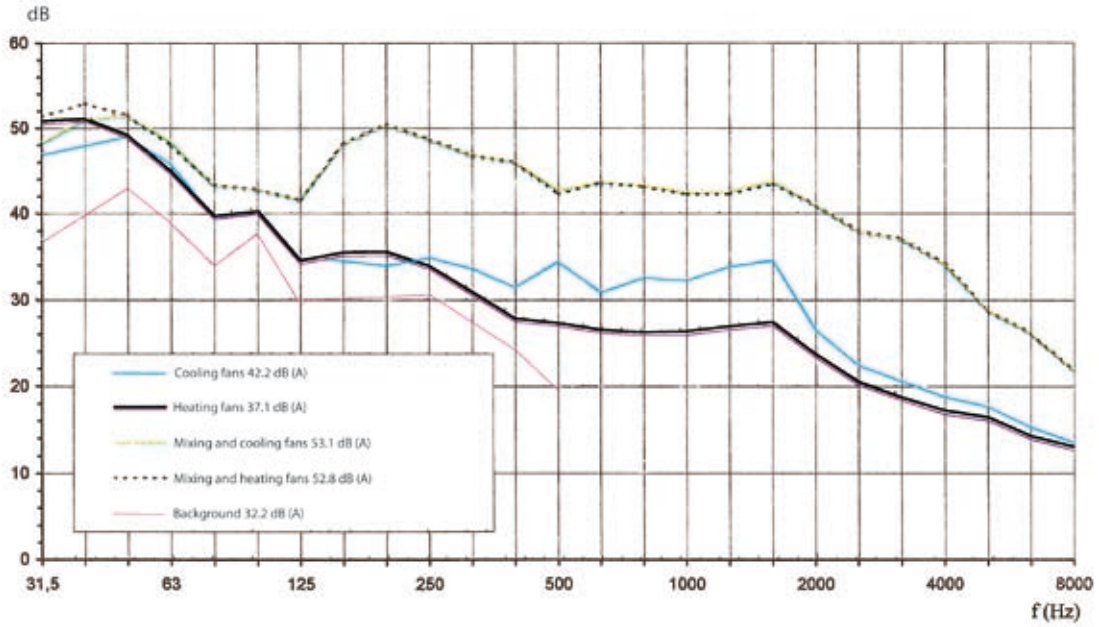

THE LEVEL OF BACKGROUND NOISE (THE CABINET SWITCHED OFF)

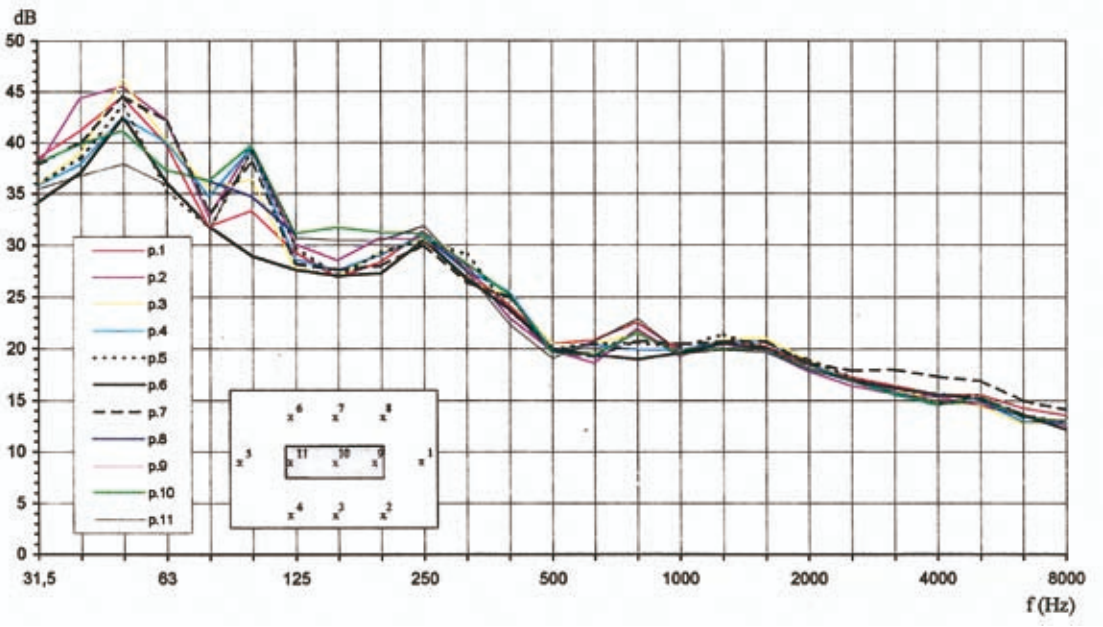

SUPPLEMENTARY ACCESSORIES

Swing frame

Double-section frame

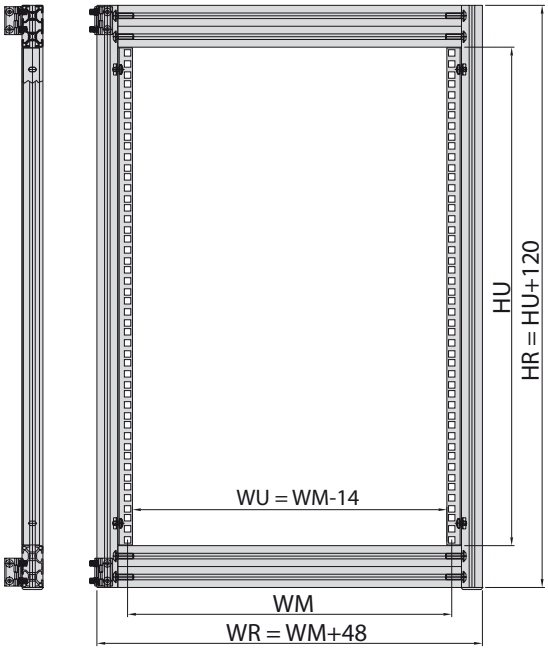

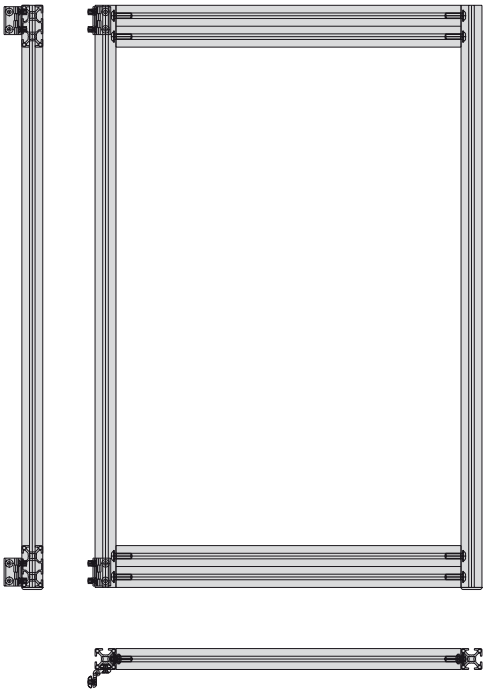

Detail A:
frame fastening

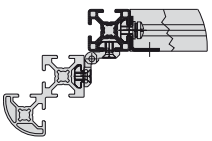

Chest-like frame

WM = 456 (19") or 515 (21") - mounting width
WU - useful width
HU - useful height

The frames can be manufacture as single-section or double-section.
In case of big loading there are used chest-like frame

SUPPLEMENTARY ACCESSORIES

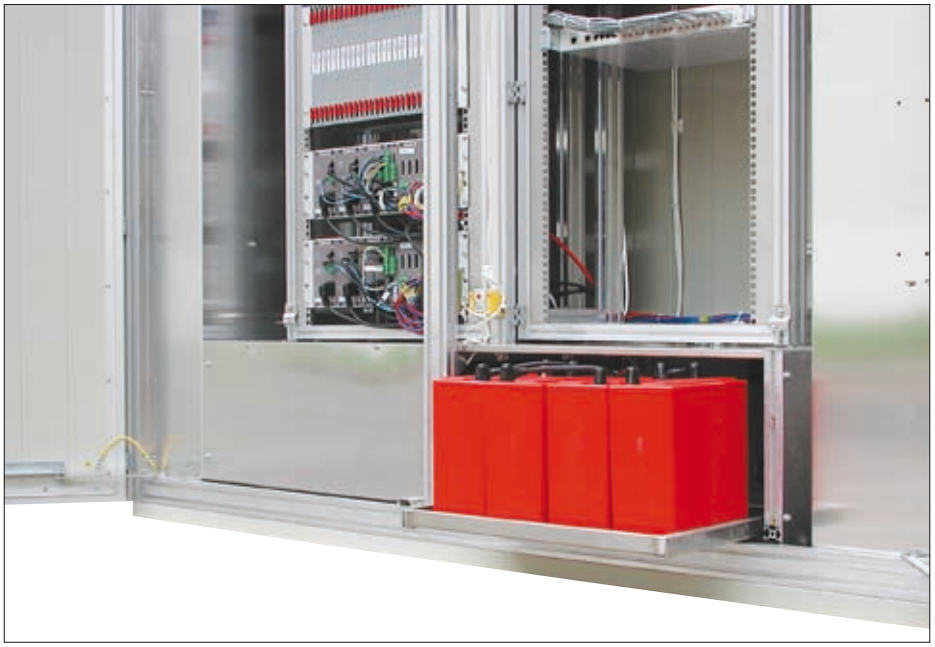

Shelves

Shelves for mounting batteries of emergency power supply are made of stainless steel. Dimensions of shelf depend on quantity of mounted batteries are determined by customer's request.

Fixed and pull out shelf

SUPPLEMENTARY ACCESSORIES

Partition and cable entry

The partition divides the chambers of the cabinet. It is made of aluminium sheet. In the partition there can be different types of cable entries: foam cable openings, rubber gland seals, cable entries ROXTEC type.

Cable entry ROXTEC type

Cable entry made of rubber gland seals

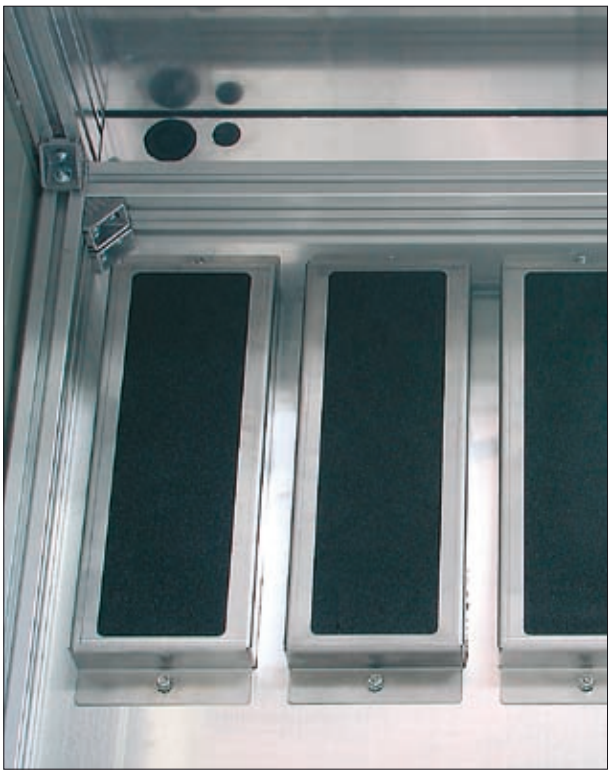

Foam cable entry

SUPPLEMENTARY ACCESSORIES

Door switch and door stop

The 3-positioned door switch is mounted at cabinet's door, positions:
- pos. 1 - unstable pushed-in (door closed)
- pos. 2 - stable pushed out (door opened)
- pos. 3 - "service position", pushed in manually, stable (door opened)

Example:
1. Cabinet's door closed
   - option I - open circuit
   - option II - closed circuit
2. Cabinet's door opened
   - option I - closed circuit
   - option II - open circuit
3. Cabinet's door opened "service" position
   - option I - open circuit
   - option II - closed circuit

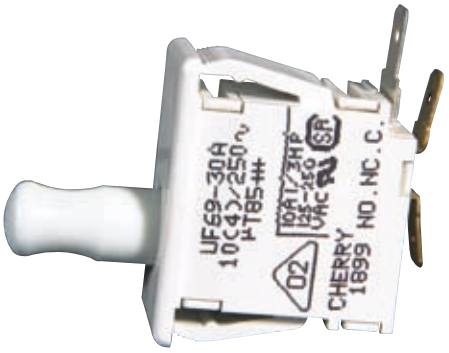

3-positioned door switch

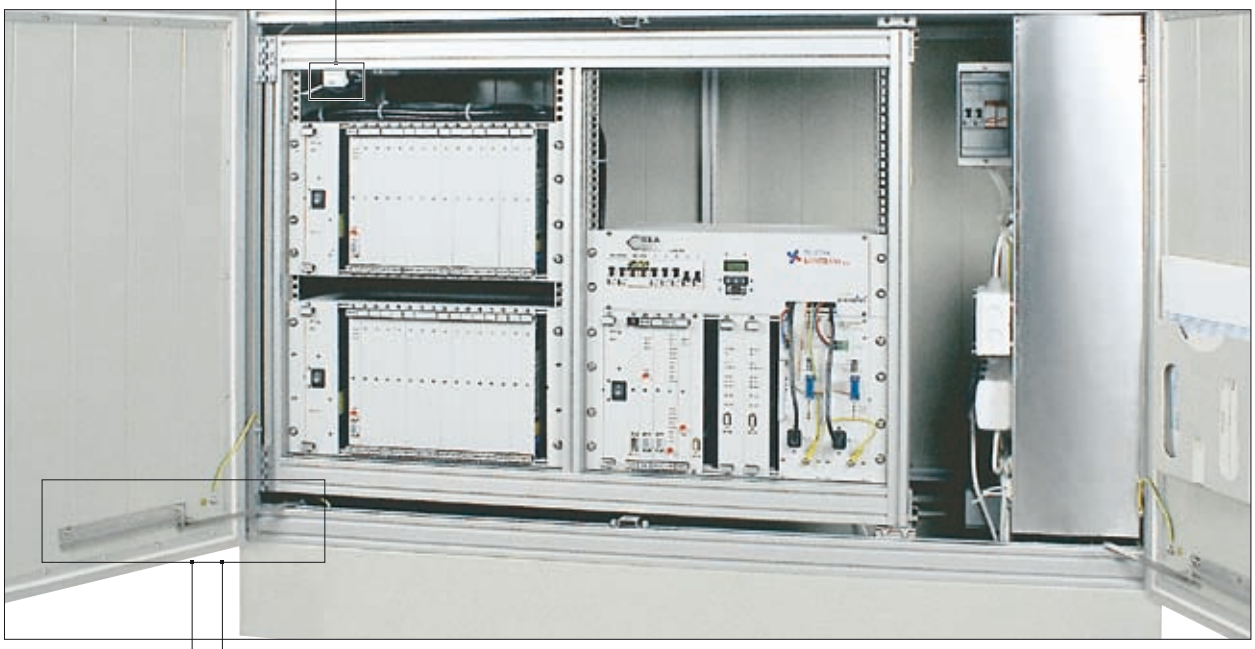

Door stop and door switch in cabinet with equipment

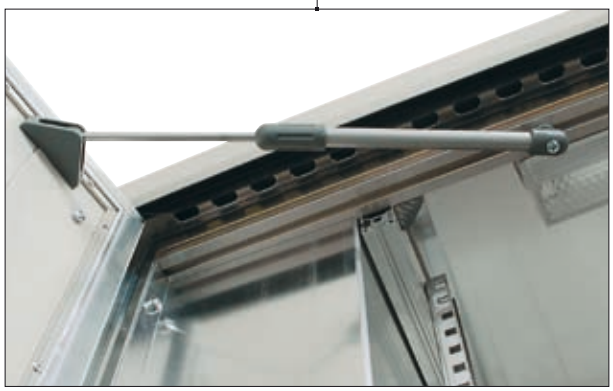

SUPPLEMENTARY ACCESSORIES

Handles for mounting of cabinet

Often, in case of small cabinets exists necessity to adaptation them to mounting directly on the wall or column. Then to the cabinet we mounted a special mounting handles.

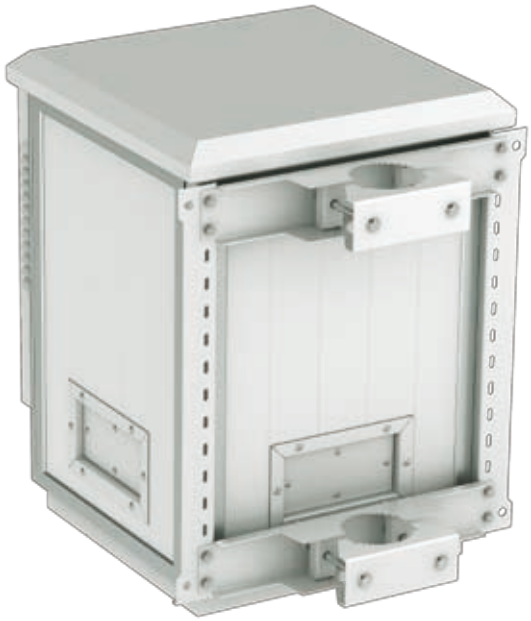

Cabinet adapted for mounting on the column

Cabinet with wall mounting bracket

SUPPLEMENTARY ACCESSORIES

POWER SUPPLY MAINTENANCE SYSTEMS

Systems of guaranteed power supply

ZPAS-NET, a supplier of a full range of solutions, also offers complete systems of guaranteed power supply from highly reputed manufacturers: Telzas, Delta Energy Systems, Eltek Valere, etc.
Power supply systems are designed for uninterruptible supply of direct current to consumers with the rated voltage of 48 V in direct full-float operating mode based on rectifiers and battery packs. The systems can be supplied in the Front Terminal version with all terminals and connectors located on the front panel of the system. In the basic version, the enclosure of the power supply system is suitable for installation in 19" cabinets (racks).

Application:
- professional telecommunications systems
- end-user telecommunications systems
- IT network systems
- industrial automation systems

DC power supply systems SDB 65 (SDB 65FT)

Input parameters:
- Input voltage ..... 3 x 230/400 V AC (-23.5 %; +30.4 %)
- Frequency ..... 45–65 Hz
- Maximum phase current ..... 2 A (three-phase) 24 A (single-phase)
- Power factor ..... ≈ 1

Output parameters:
- Range of voltage ..... 48–58 V DC
- Characteristics ..... UPI
- Stabilization of output voltage ..... ±1 %
- Maximum output current ..... 72 A
- Maximum output power ..... 3200 W
- Output voltage ripples (psophometric value) ..... < 2 mV

General data:
- Range of ambient temperatures ..... -33... +55 °C
- Cooling ..... fan-cooled
- Efficiency ..... ≥ 90 %
- Protection degree ..... IP 20
- Electromagnetic compatibility ..... PN-EN 300-386, class B
- Dimensions of the power supply system (H x W x D) ..... 133 x 482 x 390 mm
- System weight without rectifier units ..... ca. 11.0 kg
- Dimensions of the rectifier unit (H x W x D) ..... 81 x 40 x 285 mm
- Weight of the rectifier ..... 1.1 kg

DC power supply systems SDC 140

Input parameters:
- Input voltage ..... 3 x 230/400 V AC ..... (-23.5 %; +26 %)
- Frequency ..... 45–65 Hz
- Maximum phase current ..... 24 A
- Power factor ..... ≈ 1

Output parameters:
- Range of voltage ..... 48–58 V DC
- Characteristics ..... UPI
- Stabilization of output voltage ..... ±1 %
- Maximum output current ..... 140 A
- Maximum output power ..... 6800 W
- Output voltage ripples (psophometric value) ..... < 2 mV

General data:
- Range of ambient temperatures ..... +5...+40 °C
- Cooling ..... fan-cooled
- Efficiency ..... ≥ 91 %
- Protection degree ..... IP 20
- Electromagnetic compatibility ..... PN-EN 300-386 PN-T-83101
- Dimensions of the power supply system (H x W x D) ..... 134 (3U) x 483 x 300 mm 223 (5U) x 483 x 300 mm 311 (7U) x 483 x 300 mm
- System weight without rectifier units .. 27 kg
- Dimensions of the rectifier unit (H x W x D) ..... 88 x 85.5 x 273 mm
- Weight of the rectifier ..... 2.4 kg

Complete rectifier power supply systems with modules DPS 600B-48-2 19IN-1U

- Max power: 2 x 600 W
- 19" enclosure, 1 U height
- Load protection: 1 x MCB (max 16 A)
- Battery protection: 2 x MCB
- Optionally 5 x fuse protection devices: 2 battery and 3 load protective devices instead of 3 MCB
- PSC3 or PSC1 controller
- Low voltage disconnect (LVD) in the battery circuit

Complete rectifier power supply systems with modules DPS 600B-48-4 19IN-2U

- Max power: 4 x 600 W
- 19" enclosure, 2 U height
- Battery protection: 2 x MCB
- Load protection: 3 x MCB, 5 x fuse
- PSC3 or PSC1 controller
- Low voltage disconnect (LVD) in the battery circuit

Complete rectifier power supply systems with modules DPR 1600B-48

- Max power: 4 x 1600 W
- 19" enclosure, 3 U height
- Load protection: 9 x MCB
- Battery protection: 2 x MCB ≤ 125 A
- PSC3 or PSC1 controller
- Low voltage disconnect (LVD) in the battery circuit

SUPPLEMENTARY ACCESSORIES

POWER SUPPLY MAINTENANCE SYSTEMS

Smartpack S controller

Flatpack S 48 V 1000 W rectifier

1 U compact power supply system with HE technology

The ever-growing speed of telecommunication network calls for a flexible and expandable solution. With its small size, high efficiency, reliability and rich communication capabilities, the Flatpack S system meets the needs of the future. Its short design allows for installing it in most cabinets, making it a great replacement for an obsolete device.

APPLICATION

Telecommunications - mobile / wireless
- Radio links / base transceiver stations
- LTE / 4G / WIMAX
- Scattered aerial systems
- Microwave
- Broadband

Telecommunications - stationary
- Telephone exchanges / switches
- Fiber Optic / FTTX
- Microwave
- Cable
- Broadband

FEATURES

- All-in-one system:
  - Smartpack S controller
  - Rectifiers
  - Battery distribution
  - Loads distribution
- 262 mm deep
- 1 U high
- Hot plug rectifier
- Hot plug controller
- Advanced monitoring and control via Ethernet port
- 2R (40 A) distribution options:
  - 7 x 30 A MCB drawer (optionally RGR)
  - 4 x 30 A MCB on the front panel
  - 7 x 15 A MCB on the front panel
- 3R (100 A) distribution options:
  - 2 x 60 A

FLATPACK S 1U x 19" 48 V systems – 2P/3P

Model	1 controller + 2 rectifiers	1 controller + 3 rectifiers
WEJŚCIE		
Voltage	100-250 V AC	100-250 V AC
Configuration of AC connectors	Single-phase 230 V AC, or 2 x 230 V AC	Single-phase 230 V AC, or three-phase (Δ,Y) 230/400 V AC
Power supply connection	2.5 mm² connectors on the back	
Frequency	45-66 Hz	
OUTPUT		
Voltage	- 48 V DC	- 48 V DC
Current max.	40 A	100 A
BATTERY DISTRIBUTION		
LVBD	Default	Default
Maximum protection (circuit breaker)	2 x 60 A[1)]	2 x 100 A[1)]
Connection (rear)	16 mm² connectors	With M6 screw
LOADS DISTRIBUTION		
Connection from the back	Not applicable	2 x 60 A, M6 screw
Cable entering from the back, connection from the front Screw terminals LVLD optionally	7 x 30 A MCB[2)] 7 X 4 mm² for MCB 1 and 2	Not applicable
Connection from the front screw terminals, clipped	4 x 30 A MCB / 7 x fuse 15 A 4 mm²	Not applicable
KONTROLA I MONITORING		
Smartpack S	6 I/O and Ethernet	
PARAMETRY MECHANICZNE		
Dimensions (W x H x D)	19"/1U/262 mm Recommended cabinet depth: min. 300 mm	
Weight including the controller and distribution, without rectifiers	5.3 kg	5.2 kg
DESIGN STANDARDS		
Safety	UL 60950-1, EN 60950-1	
EMC	ETSI EN 300 386 V.1.4.1 EN 61000-6-1 (resistance, light industry) EN 61000-6-2 (resistance, industry) EN 61000-6-3 (emission, light industry) EN 61000-6-4 (emission, industry)	
Environmental	ETSI EN 300 019-2-1 Class 1.2 ETSI EN 300 019-2-2 Class 2.3 ETSI EN 300 019-2-3 Class 3.2	

[1)] When using only one battery branch, one battery protection can be configured as a load output
[2)] Loads drawer, access to the connections from the front after pulling the drawer out, cable entering from the back of a powerhouse

SUPPLEMENTARY ACCESSORIES

Thermostat

Thermostats are used for controlling fan units, heaters and heat exchangers, also can be used as a signal generator for monitoring the enclosure internal temperature.

TECHNICAL DATA

- Sensor element: thermal bimetal
- Temperature range: 0 - 60 °C, hysteresis ca. 7 K
- Contact types: snap action contact,
- Power carrying capacity: 6 A, 250 V AC
- Radio frequency interference: "N" (according to VDE 0875)

Connection diagram: see page 189

KTS 1141
- thermostat normally open
Switches on ventilation system (e. g. fans) at selected temperature limit.

KTO 1140
- thermostat normally closed
Switches off off devices (e. g. heaters) at selected temperature limit.

MPSM-S1
Microprocessor Power Control Panel

MPSM-S1 is a programmable 19" panel for power supply, control, monitoring, energy saving and recording. It measures voltage, current and power for each socket, as well as temperature and humidity. The device is equipped with an unparalleled set of features that make it indispensable in data communication infrastructure. It has an Ethernet communication module with software for Windows systems. The panel features 8 GB of internal memory (hardware database) that is used for recording measurements, events and alarms. The memory allows for up to 24 months of continuous recording.

MPSM-S1 panel is a Polish product that has been designed and manufactured in our company.

For detailed description of the MPSM-S1 panel see pages 142–145.

SUPPLEMENTARY ACCESSORIES

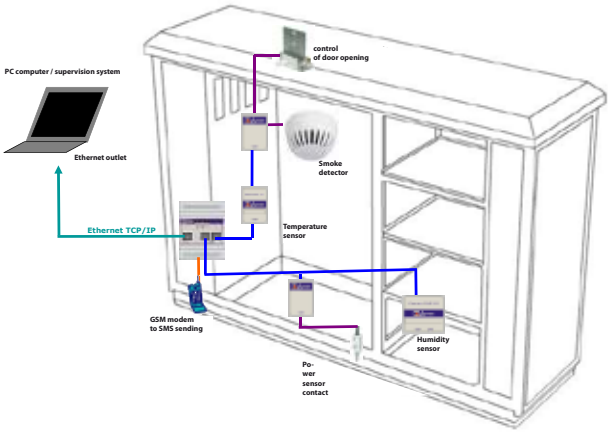

Monitoring system of climatic conditions and access control in SZD cabinets

On below example we see a system of: access control, climatic conditions supervising system and fire protection. Devices inside the cabinet are protect against flooding. All events can be instant pass on by GSM modem or mobile phone, as SMS massage or email on devices administrator address. Driver worked in the cabinet enable to communication with supervising system by interactive network or internet.

System is very adaptable and easy in extension. Thoughtful way of devices connect technology selection, enable a max simplify installation of monitoring devices.Devices can be switch on to bus with any topology by RJ-45.
This solution allow to spare time on wires "screw" connection. Bus communicated and supply devices , so there isn't any requirement to lead separate supply to sensors and converters.

The main part of system is software, enable to data gather, visualization and processing. User receive a complex system of remote supervising ,operate by internet viewer. Its enable to object monitoring from any place of the world. Building any visualization and selection only interesting measurements, both current and archival. Allow to accommodation of set-ups to clients individually necessities. System also have a complex mechanism of alarm operation. In alarm situation, status will be identified with any measurement and situated in predefinition alarms group , in consequence, in alarm situation on many sensors, will be generate only one alarm.

Mechanism of data access control, gathered by supervising system, separate users rights, both in sense of task in system, and also access to monitoring objects. Archival data can be view by table listing and graph. All data from system can be printed. To additional virtue of system is absence of users quantity license.

SUPPLEMENTARY ACCESSORIES

Insulating base

For additional cold and humidity protection, the cabinet can be set on insulating base filled with foam. The insulating frame shall be ordered separately.

Voltage distribution panels

Cabinets can be equipped with power distribution panels configured according to customers' request.

Heater

Compact heating device including heating element and fan

TECHNICAL DATA

- voltage rating ..... 230 V AC 50-60 Hz
- heating power (3 levels) ..... 200/300/400 W
- fan capacity ..... 10 m^3 /h
- protection degree ..... IP 20
- dimensions ..... 71 x 70 x 96.5 mm
- mounting ..... bracket for DIN rail mounting

SUPPLEMENTARY ACCESSORIES

Concrete foundations

In order to provide a complete range of services, ZPAS-NET also offers concrete foundations. These are prefabricated elements either with a monolithic design or connected by means of M10 bolts. In the upper part of the foundations there are M12 anchor bolts welded to the reinforcement. The spacing of the bolts is adjusted to the plinth size of different outdoor cabinets. All parts are moisture-protected. Openings on both sides of the foundations serve as cable entries.

SAMPLE SCREW-FASTENED FOUNDATIONS

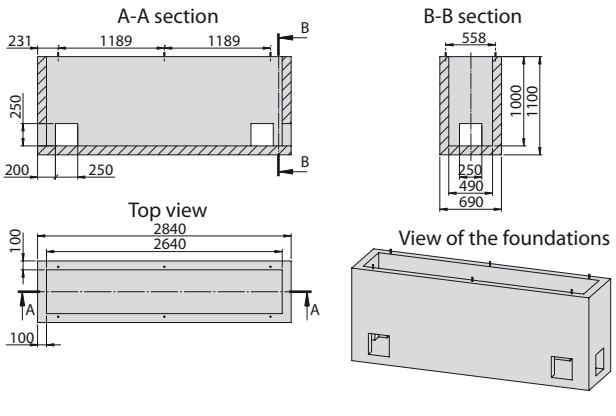

SAMPLE MONOLITHIC FOUNDATIONS

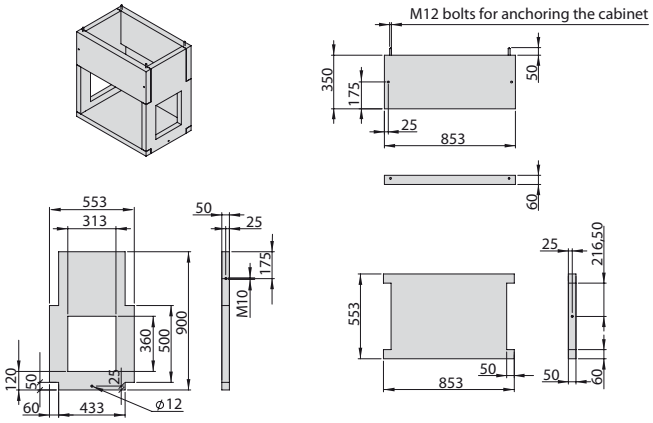

Frame for concrete

Foundation frame for concrete to be placed under SZD cabinet.
Equipped with positioning handles and templates for laying conduit pipes.

SZD CABINETS IN ACCORDANCE WITH EMC STANDARD

EMC shielded cabinets

EMC shielded cabinets are used when devices which are mounted inside the cabinet require protection in electromagnetic compatibility. Aluminium profiles used in the cabinet are additionally chromated. Special current conductive gasket is used in order to provide conductivity between each element of the cabinet (roof, plinth, side shields, door).

APPLIANCES IN SUBSCRIBERS' ACCESS SYSTEMS

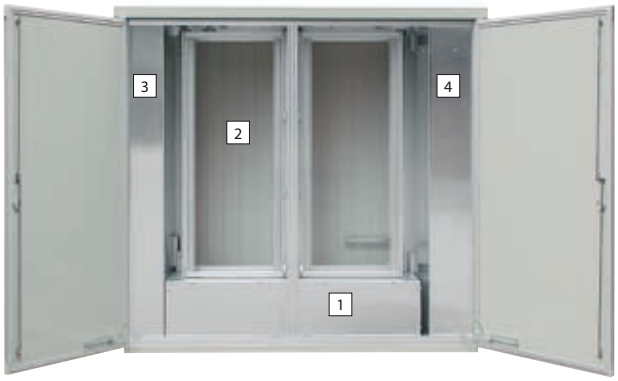

Division of cabinet's interior

In the cabinet's construction there are four autonomous sections:

1) Battery section

2) Chamber of devices

3) MDF section

4) Energy section

Battery section

In standard, it is placed in the bottom part of the cabinet and is designed for installing temporary emergency power supply of the system. For additional lower of temperature in summer season, there are used two solutions:
- thermal battery,
- ventilating fans - ventilation of the section through the cabinet's mantle.

Chamber of devices

In standard, it is placed in the central part of the cabinet and equipped with mounting bars in 19" or 21" standard or the swing frame. This section is designed for mounting active devices of subscribers' access system (service of optical fibre and patch panels).

APPLIANCES IN SUBSCRIBERS' ACCESS SYSTEMS

Distribution section

This section is designed for operator. It is equipped with teletechnical links (instillation of copper cables). Additionally, the section can be equipped with support moveable construction which adapts to each type of terminal blocks.

Energy section

This section is intended for power industry plants and designed for input of power supply. It has got fuses and a socket to plug in standby diesel generator in case of energy failure. In this section it is also possible to mount electricity meter and additional a special sight-glass, which enables reading of the meter without opening the cabinet's door.

SZD CABINETS FOR POWER INDUSTRY

SZD Cabinets are used as a enclosure to measuring system also and energetic distribution. Enclosure of this type requires the special organization of cabinet interior. Applied in earlier solutions mounting bars was replaced by mounting board or system of special cross bars. Often on outside of the cabinets additionally is installed a energetic terminal socket.

FS wiring cabinet
For more information see page 410

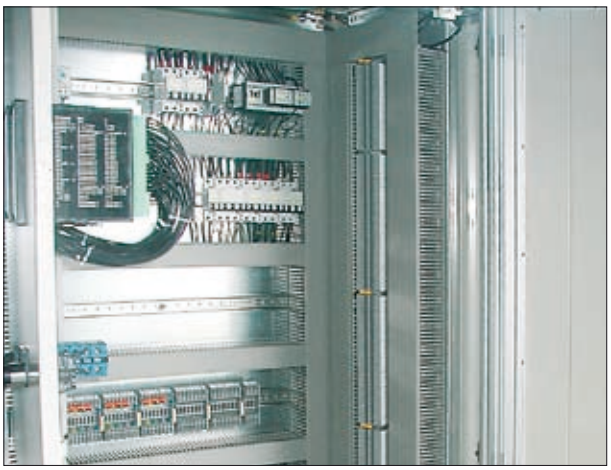

SZD CABINETS FOR POWER INDUSTRY

Cabinet for electrical substation earthing

Cabinet for lighting control

SZD CABINETS ADAPTED FOR POWER SUPPLY SYSTEMS

SZD cabinets are also used for outdoor installation of amplifiers for cordless power supply of telecommunication devices. Cabinet's interior is divided into two autonomous parts: battery section (bottom part of the cabinet) and devices section (upper part of the cabinet). Additionally, on customer's request, it is possible to manufacture a special type of roof intended to assembly of electric accessories.

Inside the cabinets there are mounted telecommunication amplifiers with high power, what is consequence of big power losses (heat dissipation). Direct venting, by means of two fans (which capacity is 510 m^3/h each) mounted on the roof or on the cabinet's door, provides specific climatic conditions inside the cabinet.

Additionally, the system of fans' control can be used. It is able to switch on the roof fans on pre-set inside temperature threshold. Fans' rotation is lineal regulated and depends on temperature of modems installed inside of the cabinet.

EXTENSION OF OUTDOOR CABINETS

Often after several years since moment of installing the cabinet appears a necessity of installation in enclosures a new equipment. With way on fact that space in cabinets was alredy used earlier, it state a serious problem for fitters. Going out to opposite of requirement ZPAS company worked out three ways of increasing existing cabinet:

Cabinet before extension

1) Extension of cabinet on sides – This solution consist on mounting to existing cabinet on sides a DOSTAWKA which can be used at will. (MDF section, battery section, chamber of devices, energy section)

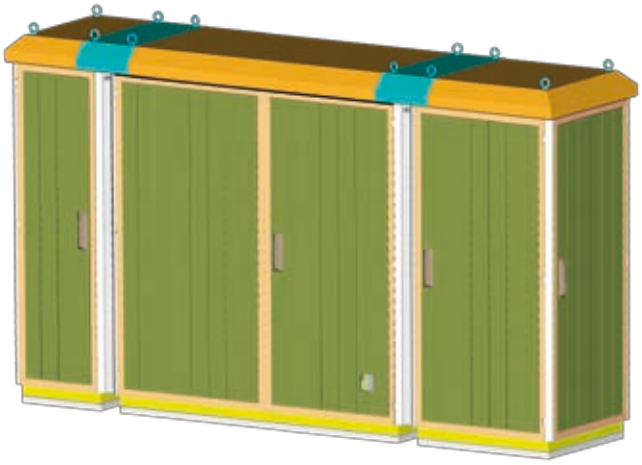

Idea of outdoor cabinets Extensions

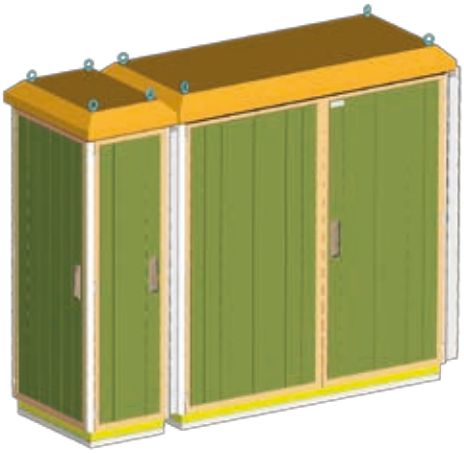

The Cabinet after extension

EXTENSION OF OUTDOOR CABINETS

2) Cover plate on cabinet – the solution consists on disassembly of doors and shields in old cabinet and putting on from top, new larger enclosure. It covers so far installed equipment and it allows on adding new one. This variant does not require stopping work of installed equipment on time of exchange enclosure

Cabinet before extension

Cabinet during extension

The Cabinet after extension

The Cabinet after extension

EXTENSION OF OUTDOOR CABINETS

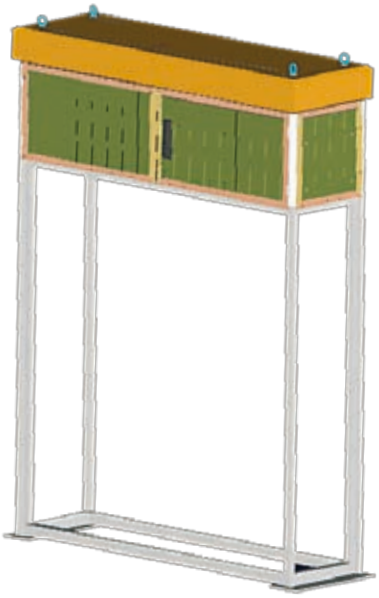

3) Extension upwards – the solution consists on disassembly of external mantle and internal roof then putting on and installing top swage

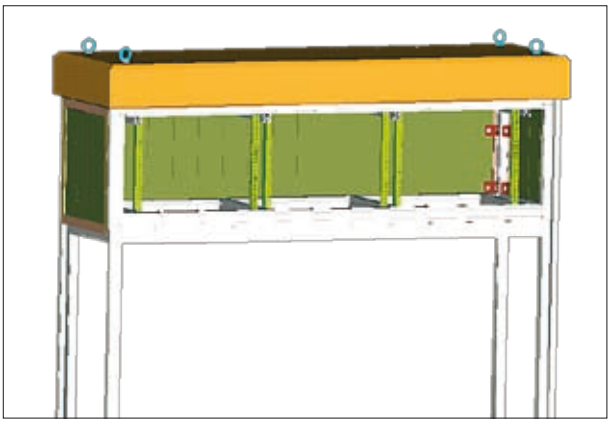

Idea of outdoor cabinets Extensions

The Cabinet after extension

The Cabinet after extension

The Cabinet after extension

CUSTOM SOLUTIONS

SZD cabinets with a glass panel in the door

Mobile cabinet

CUSTOM SOLUTIONS

SZD cabinets with a glass panel in the door, mounting plate, swing frame and air conditioner

SZD cabinet for battery charger

Cabinet based on standard SZD type; aluminium doors and side panels were replaced by aluminium sheet.

OUTDOOR CABINETS MADE OF ALUMINIUM SHEETS

Outdoor cabinets made of aluminium sheets come in two types:
Single-wall cabinet – made of sheet metal with a thickness of 2 mm
Double-wall cabinet – outer jacket and metal sheet frame with a thickness of 2 mm, metal sheet inner cladding with a thickness of 1 mm or 1.5 mm (depending on the cabinet size).

All outdoor cabinets are custom-made. You can order a cabinet in size, with partition of cabinet's interior and supporting structure of your choice.

To ensure appropriate climatic conditions inside an enclosure, we use various types of heat removal systems (ventilating fans, heat exchangers, air conditioners), and the right number of heaters, depending on your needs.

To improve insulation, the cabinet's interior can also be lined with insulating foam.

The cabinets have IP 54 protection degree.

Cabinets completely made of aluminium sheet

OUTDOOR CABINETS MADE OF AL-ZN COATED STEEL SHEET

Cabinet made of Al-Zn coated sheet steel

Cabinet with single walls, made entirely of Al-Zn coated steel sheet, and powder painted.
Cabinet doors are protected from sticking posters.

Cabinet with double walls, made entirely of Al-Zn coated steel sheet, and powder painted

Cabinets made of Al-Zn coated sheet steel	
OUTDOOR CABINETS	

OUTDOOR CABINETS MADE OF STAINLESS STEEL SHEET

Cabinet made of stainless sheet steel

CONTROL CABINETS & ELECTRIC SWITCHGEARS

Cabinets for electrical substations 382-411
Auxiliaries switchgears 404
Guaranteed voltage switchgears 406
Protection cabinets 408
Meter cabinets 409
Telecommunication cabinets. 409
Wiring cabinets. 410
Electric switchgears 412-417
Switchgears up to 630 A 412
Switchgears up to 1250 A 413
Capacitor bank cabinets 414
Automatic transfer switch system 416
Cabinet prefabrication 418-427
Fitting enclosures with electrical equipment
according to our own or received projects 418
Examples of applications. 419

CABINETS FOR ELECTRICAL SUBSTATIONS

AC auxiliaries switchgears 400/230 V FX, FA

FX, FA auxiliaries switchgears offered by ZPAS are indoor structures, designed for supplying auxiliary demand of MV and LV switchrooms.
FX and FA switchgears are based on SZE2 enclosures. They consist of three or more cabinets with dimensions 2000 x 600-1200 x 600-800 mm.
Depending on customer requirements or equipment provided by the technical design, cabinet construction can be customized to individual needs – both in terms of dimensions and equipment.

A typical configuration of FX and FA switchgears:
- solid or glazed front door,
- access to equipment on one side or both sides,
- terminal strips, busbar trunkings are mounted inside the cabinet on the mounting plate or the system of mounting profiles,
- descriptions made as requested and according to standard of the facility which the switchgears are designed for, - plinth with a height of 100 or 200 mm, solid or perforated.

Auxiliaries switchgear 400/230 V AC is supplied from two or more sources. Circuit-breakers or contactors are fitted in the main tracks in accordance with the project requirements. The basic element of the system is the SZR automation system tailored to customer requirements. For protecting outgoing feeds, fused load break switches, e.g. NH, TYTAN II, circuit breakers or thermal fuses are used. Each outgoing track is led to the terminal block. Switchgears are equipped with measurement of current and voltage of each incoming feed. Meters can be located on switchgear door or inside the cabinet on masking panels. Switchgears are equipped with signalling and emergency circuits incorporated into the station's central signalling system.

RATING

Cabinet factory designation	FX, FA
Primary rated voltage	400/230 V
Rated continuous current of cabinet's auxiliaries	up to 1600 A
Rated frequency	50 Hz
Rated insulation voltage	500 V
Protection degree	IP 54

CABINETS FOR ELECTRICAL SUBSTATIONS

EXAMPLE OF AUXILIARIES POWER SUPPLY SYSTEM BASED ON WIKING EQUIPMENT OF ELTEK COMPANY

AC guaranteed voltage switchgear with modular inverter IBF DC/AC INV222

RAC 230 WIKING guaranteed voltage switchgear is an AC power supply.
When working with RDC 220 and BGPW, it provides uninterrupted power supply for telecommunications devices, remote protection devices and data communication infrastructure installed in a grid station.

Comes with:
- IBF DC/AC INV222 modular inverter
- IBF AC/DC FLATPACK2 modular rectifier
- STS 207 with controller
- I/O modules
- manual uninterrupted bypass switch

Basic features:
- modular design
- N+1 to N+N redundancy
- hot-swap modules
- high efficiency
- high MTBF
- reliability
- low cost of ownership

STS 207 module with integrated controller

IBF AC/DC modular inverter

Main 230/400 V AC auxiliaries switchgear

Main switchgear is used to power all the devices in the grid station. In addition to power distribution, the switchgear has automatic train stop systems (ATS) for switching power between available power sources.

Comes with:
- power distribution
- ATS
- mimic system
- current, voltage and power measurements
- outgoing circuits protection
- surge protection
- signalling systems

Basic features:
- tailor-made
- robust design
- clear marking system
- easy access
- safety
- reliability
- low cost of ownership

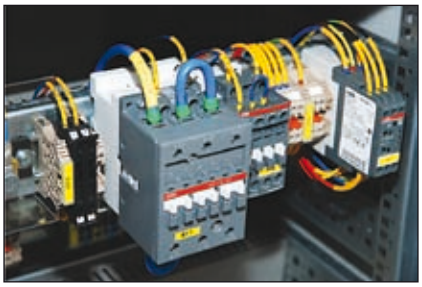

CABINETS FOR ELECTRICAL SUBSTATIONS

FC auxiliaries switchgears 110/220 V DC and guaranteed voltage switchgears 230 V AC and 24-48 V DC

FC auxiliaries switchgears offered by ZPAS are indoor structures, designed for supplying auxiliary demand of MV and LV switchrooms.
FC switchgears are made based on of SZE2 enclosures with dimensions 2000 x 600-800 x 600-800 mm.
Depending on customer requirements or equipment provided by the technical design, cabinet construction can be customized to individual needs – both in terms of dimensions and equipment.

A typical configuration of FC switchgears:
- glazed front door,
- set of 19" mounting profiles in front and rear of the cabinet,
- equipment protected by IP 30 masking panels,
- access to equipment on one side,
- descriptions made as requested and according to standard of the facility which the switchgears are designed for,
- plinth with a height of 100 or 200 mm, solid or perforated.

Constant voltage switchgears are intended for supplying appliances with DC with rated voltage of 110 V and 220 V. The switchgear is supplied with alternating voltage from one or two sources. The main element of this system is a rectifier with external current measurement and a battery pack placed on the outside of the cabinet.

Guaranteed voltage switchgears are intended for supplying appliances of critical internal functions of the station, such as secondary protection circuits, control circuits and emergency signalling circuits. 230 V AC switchgears are equipped with inverters, whereas 24-48 V DC switchgears have power supplies with parameters in accordance with the station design. For protecting outgoing feeds, fused load break switches, e.g. NH, TYTAN II, circuit breakers or thermal fuses are used. Each outgoing track is led to the terminal block. Switchgears are equipped with measurement of current and voltage of each incoming feed. Meters can be located on switchgear door or inside the cabinet on masking panels. Switchgears are equipped with signalling and emergency circuits incorporated into the central signalling system.

RATING

Cabinet factory designation	FX, FA
Primary rated voltage	230 V AC, 24-48 V DC
Rated continuous current of cabinet's auxiliaries	up to 63 A
Rated frequency	50 Hz, 0 Hz
Rated insulation voltage	500 V
Protection degree	IP 54

CABINETS FOR ELECTRICAL SUBSTATIONS

EXAMPLE OF AUXILIARIES POWER SUPPLY SYSTEM BASED ON WIKING EQUIPMENT OF ELTEK COMPANY

DC guaranteed voltage switchgear with MPSU Flatpack2 modular telecommunications power unit

RDC 48 WIKING DC switchgear is a 48 V DC power supply. Depending on your needs, the switchgear is powered from one RGPW section with single- or three-phase voltage. Power station provides 48 V DC supply for telecommunications equipment into the grid station, and charges the batteries connected in parallel. RDC 48 can also be powered directly from the 220 V DC main battery, allowing it to work as a DC/DC converter.
Switchgear can also be delivered with 24 V DC modules.

Comes with:
- MPSU Flatpack2 modular power station
- Flatpack2 rectifier modules
- Smartpack2 controller
- I/O modules

MPSU Flatpack2 power unit

Smartpack2 controller display

DC guaranteed voltage switchgear with modular rectifier IBF AC/DC Flatpack2

RDC 220 WIKING guaranteed voltage switchgear is a 220 V DC power supply. It supplies all of the grid station appliances that are designed to work at 220 V DC voltage. Its task is also to keep the BGPW batteries fully charged so they can provide 220 V DC supply for the appliances if 3x400 V AC network power supply fails.

Comes with:
- IBF AC/DC Flatpack2 modular rectifier
- Flatpack2 rectifier modules
- Smartpack2 Industrial controller
- I/O modules

IBF AC/DC modular rectifier

Basic characteristics of both switchgears:
- modular design
- N+1 to N+N redundancy
- hot-swap modules
- high efficiency
- high MTBF
- reliability
- low cost of ownership

CABINETS FOR ELECTRICAL SUBSTATIONS

FR protection cabinets

FR protection cabinets offered by ZPAS are indoor structures, designed for installing safeguards, control equipment, signalling equipment and instrumentation as well as control for MV and HV switchrooms.
FR protection cabinets are made based on SZE2 enclosures with dimensions 2000 x 800 x 600 or 2000 x 800 x 800 mm. Depending on customer requirements and equipment provided by the technical design, cabinet construction can be customized to individual needs – both in terms of dimensions and equipment.

A typical configuration of FR cabinets:
- glazed front door,
- symmetrical swing frame and mounting plate or a set of mounting profiles for installing devices behind the swing frame,
- access to equipment on one side or both sides,
- equipment protected by IP 30 masking panels,
- descriptions made as requested and according to standard of the facility which the switchgears are designed for,
- plinth with a height of 100 or 200 mm, solid or perforated.

Protection cabinets we make:
- Protection of 110 kV, 220 kV, 400 kV lines
- Protection of HV transformers
- Protection of coupler

Installed safeguards:
- Distance
- Differential protection
- Overcurrent protection
- Earth-fault protection
- Section protection
- Breaker failure protection
- Bus-bar protection

The standard protection cabinet configuration includes control gear and signalling equipment, instrumentation and control mounted on a symmetrical hinged frame as well as auxiliary relays, circuit protection equipment, power supplies, connectors for connecting external circuits, etc. mounted on a mounting plate or on mounting profiles inside the cabinet.
The cabinets are made with single-sided or double-sided access.

CABINETS FOR ELECTRICAL SUBSTATIONS

FQ meter cabinets

Meter cabinets are made on the basis of SZE2 enclosures. Depending on a project, their dimensions are 2000 x 600-800 x 600-800 mm. The typical configuration is the mounting plate. There is also a solution with a split mounting plate. Its upper part is then rotatable, and the lower part is fixed. The upper one is designed for installation of electricity meters, whereas the lower one for mounting measurement strips. There are also solutions with a swing frame. Electricity meters are then mounted on the frame, and the measurement strips on the mounting plate or the system of mounting profiles. Access may be one-sided or two-sided. Glazed door.
Cabinet configuration is tailored to the station design and can always be adapted to the customer's requirements – both in terms of dimensions and equipment.

Telecommunication cabinets

FT and SUT telecommunication cabinets are made based on of SZE2 and SZB enclosures. Their dimensions are 2000 x 600 x 600-800 mm. The typical configuration includes front glazed door, a set of 19" mounting profiles in front and rear of the cabinet, equipment protected by IP 30 masking panels. Access is one-sided. Usually it houses equipment for collecting information on the state of the station, and transferring the information to the master system. Cabinet configuration is tailored to the station design and can always be adapted to the customer's requirements – both in terms of dimensions and equipment.

SUT telecommunication cabinet on the basis of SZB enclosure

CABINETS FOR ELECTRICAL SUBSTATIONS

FS wiring cabinets

Wiring cabinets are made based on of SZD enclosures (see page 391) and intended for outdoor use. Electric instrumentation installed inside the cabinets is used for supplying power to and controlling drives of HV and MV power station switches as well as for transmitting data from measuring circuits.
As a standard, the plinth of the cabinet is equipped with a firescreen compartment. In addition, it is possible to deliver the cabinet in an option with a special concrete foundation.

The cabinet has a basic wiring system designed for:
- supplying power to the cabinet's circuits and transferring it to other cabinets;
- maintaining preset climatic conditions inside the cabinet to ensure correct operation of electric devices;
- providing a lighting system;
- supplying power to one- and three-phase maintenance sockets;
- installing electric gear inside the cabinet, as per customer's request and in accordance with specifications prepared for a specific facility.

The basic configuration of the wiring cabinet is made in conformance with assumptions typically adopted for wiring cabinets designed for HV and MV power stations and is available with or without sectionalisation of circumferential circuits.

The basic electric circuits of the cabinet are protected by means of RCCBs with overcurrent protection. The cabinet's heating is provided using two Cirrus 60 heaters, with a power output of 400 W each, controlled by means of a KTO 1140 thermostat with a control range of 0-60 °C. Heating is controlled automatically using the thermostat or manually, by means of a special switch located in the control panel. 40 W light fixtures, one on each side of the cabinet, are powered by door limit switches or manually, by means of a switch located in the control panel. The basic wiring system is designed for the operation in the TN-C-S power system. The wiring cabinet meets the requirements listed in the EN 60439-1 standard.

RATING

Cabinet factory designation	SZDs-355
Rated primary voltage	400/230 V
Rated continuous current of the cabinet's own wiring system	25 A
Rated frequency	50 Hz
Rated insulation voltage	500 V
Protection degree	IP 54 / IP 55

CABINETS FOR ELECTRICAL SUBSTATIONS

OPERATING CONDITIONS

Environmental conditions according to		IEC 364-3
Ambient temperature	-25 ÷ +40 °C	AA3-AA4
Climatic conditions (temperature and humidity)	temperature from -25 to +40 °C relative humidity from 5 to 100 %	AB3-AB4
Altitude above sea level	< 2000 m	AC1
Water presence	water splashes	AD4
Presence of foreign solids	slight dustiness	AE4
Presence of substances causing corrosion or contamination	atmospheric	AF2
Surge	medium	AG2
Vibrations	medium	AH2
Presence of flora and/or mould	none	AK1
Presence of fauna	none	AL1
Electromagnetic, electrostatic or ionizing effect: **- harmonics** **- signal voltage levels** **- voltage amplitude changes** **- voltage asymmetry** **- mains frequency changes** **- induced low-frequency voltage** **- magnetic field radiation** **- electric fields**	 normal medium normal normal normal not classfied high high	 AM-1-2 AM-2-2 AM-3-2 AM-4 AM-5 AM-6 AM-8-2 AM-9-3
Solar radiation	medium	AN2
Seismic shock	negligible	AP1
Atmospheric discharge	indirect effect	AQ2
Wind	strong	AS3

ELECTRIC SWITCHGEARS

Switchgears up to 630 A

Switchgears for currents up to 630 A are made based on our own enclosures and enclosures of all the companies on the market. Our own structures are based on the basic version of the power cabinets manufactured by ZPAS – i.e. SZE2 cabinets. These cabinets are made of single-walled steel sheet and powder coated. Modular equipment is installed on dedicated structure. Switchgears based on this design are featured with IP 30 safe-to-touch protection degree, and IP 64 in case door is closed.
These switchgears utilize 60 mm rails from Wohner, Hager, Eaton, equipment from ABB, Efen, ETI, Hager, Eaton, Schneider, Schrack, Siemens.
The switchgears have three distinguished assembly zones:
- busbar system zone (3 BMHs),
- apparatus assembly zone (8 BMHs in case of the cabinets 2000 mm high),
- cable entry zone (1 BMHs + 100 mm).

With such a switchgear construction, the cabinets 2000 mm high and 600 mm wide can contain modular instrumentation counting 288 units (18 mm), cabinets 800 mm wide – 432 modules, and cabinets 1000 mm wide – 576 modules, respectively.

SWITCHGEAR PARAMETERS:

Switchgear factory designation	RM 630
Primary rated voltage	400/230 V
Rated continuous current of the switchgear	630 A
Rated peak withstand current	14.7 kA
Rated short time withstand current	7 kA / 1 s
Rated frequency	50 Hz
Rated insulation voltage	500 V
Rated short duration power frequency withstand voltage	2.5 kV
Protection degree with the door open	IP 64

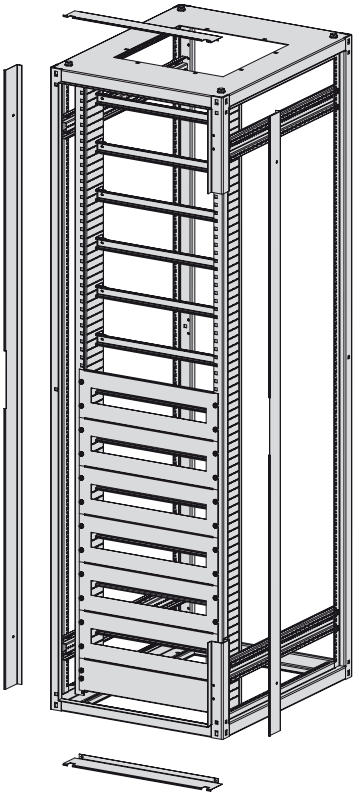

ZPAS Modular System - see page 320

ELECTRIC SWITCHGEARS

Switchgears up to 1250 A

ZPAS-NET manufactures switchgears for rated currents up to 1250 A based on the SZE2 and SZE3 enclosures of ZPAS company (see page 274, 320). These switchgears are used for power distribution and include panels for connecting air circuit breakers (incomer panel), moulded case switches and vertical and horizontal strip fused load break switches (outgoing panel). 1250 A switchgears passed type tests at Energopomiar – Elektryka Gliwice according to PN-EN 60439-1:2003+A1 2006.

SWITCHGEAR PARAMETERS:

Switchgear factory designation	SZE-2/SGP 1250
Primary rated voltage	400 V
Rated continuous current of the switchgear	1250 A
Rated peak withstand current	105 kA
Rated short time withstand current	50 kA / 1 s
Rated frequency	50 Hz
Rated insulation voltage	750 V
Rated short duration power frequency withstand voltage	8 kV
Protection degree	IP 54

SZE-2/SGP 1250 electric switchgear
- outgoing panel with vertical load switches

SZE-2/SGP 1250 electric switchgear
- outgoing panel with horizontal load switches

ELECTRIC SWITCHGEARS

Capacitor bank cabinets

Capacitor banks are used for compensation of the induction reactive power consumed in most cases by induction motors. The purpose of compensation is to reduce losses in transmission networks and induction power consumption, which lowers electricity bills. If your electricity bill shows for "electricity consumption beyond the agreed limit" an above-zero value to pay, then you should use capacitor bank. The higher this value is, the sooner capacitor bank will pay for itself. You can also use your electricity bill to select capacitor bank power. This should be done when the plant load was at the target level during the invoiced period. The bill also gives tgφ– maximum in a given billing period. Capacitor bank power is determined from the formula:

$Q_{BAT} = P_{max}$ (tgφ-0.4+0.1), where:

P_{max} = 15-minute maximum power read from the bill in kW,

Q_{BAT} = capacitor bank power in kVAr

To select the right power of a capacitor bank, you will also need type of power and level of voltage and current distortion. This information can be obtained through measurements. Type of capacitor bank is selected based on load variation rate and distortion level. A capacitor bank often pays for itself just after a few months. Since the lifetime of a properly selected unit is at least a dozen years, this is certainly money well spent, money that will come back to you even 20-fold. Installing capacitor banks does not require you to give notice to your electricity supplier, and does not increase active energy consumption.
When set up correctly, a capacitor bank works autonomously and automatically. It only requires periodic inspections (at least once a year) which involve dust removal and visual inspection of devices and current circuits.
ZPAS-NET produces two types of capacitor banks for automatic compensation:

1. BKZN basic version for networks with small harmonic interference of SH/ST < 25 %,
2. version with BKDZN protective chokes for networks with harmonic interference of SH/ST < 50 %.

For the production of banks we use Alpivar capacitors of Legrand. The capacitors are made with insulation class II in the housing made of self-extinguishing polyurethane resin. Each capacitor bundle is triple-protected by:
- self-extinguishing metallized polypropylene tape,
- electrical fuse,
- overpressure disconnector.

The maximum allowable capacitor voltage is 1.18 Un, and the maximum allowable current is 1.5 In. Operating temperature -25/+55 °C. Capacitors have internal discharge resistors with discharge time of 3 min. Alpivar capacitor loss power is 0.3 W per 1 kVAr.
The capacitor banks we produce are automatic; thus, switching on individual capacitor stages is done via electromechanical contactors controlled by Alptec power factor controller.
Cabinets are equipped with compensation panels and have the typical and uniform dimensions, which simplifies installation and expansion of the cabinets.
Our range of capacitor banks is presented in the tables below; however, we also create tailored-made configurations.

ELECTRIC SWITCHGEARS

NON-CHOKE CAPACITOR BANK SPECIFICATIONS

Basic type . . . . . .BKZN
Nominal power of a single rack . . . . . .2.5 up to 125 kVAr
Nominal power of a cabinet set . . . . . .7.5 up to 300 kVAr
Nominal voltage . . . . . .3x400 V, 50 Hz
Maximum allowable voltage . . . . . .520 V (capacitor)
Harmonics . . . . . .THDU < 3 %
THDI < 10 %
SH/ST ≤ 25 %
Loss factor . . . . . .2 W/kVAr
Operating temperature range . . . . . .-10 °C up to +45 °C
24-hour average: +40 °C
Storage temperature . . . . . .-20 °C up to +60 °C
Cabinet dimensions (W x D x H) . . . . . .600 x 500 x 1400 mm
Rack dimensions (W x D x H) . . . . . .580 x 400 x 248 mm
Compliant with . . . . . .IEC 61439-1 and 2

CHOKE CAPACITOR BANK SPECIFICATIONS

Type with chokes . . . . . BKDZN
Nominal power of a single rack . . . . . 2.5 up to 125 kVAr
Nominal power of a cabinet set . . . . . 7.5 up to 300 kVAr
Nominal voltage . . . . . 3x400 V, 50 Hz
Maximum allowable voltage . . . . . 520 V (capacitor)
Harmonics . . . . . THDU < 6 %
THDI < 40 %
SH/ST ≤ 50 %
Loss factor . . . . . 6 W/kVAr
Operating temperature range . . . . . -10 °C up to +45 °C
24-hour average: +40 °C
Storage temperature . . . . . -20 °C up to +60 °C
Cabinet dimensions (W x D x H) . . . . . 800 x 500 x 1600 mm
Rack dimensions (W x D x H) . . . . . 700 x 458 x 325 mm
Compliant with . . . . . IEC 61439-1 i 2

Capacitor banks cabinets with automatic power control without chokes

Type	Catalogue number	Bank power [kVAr]	Degrees [kVAr]	Cabinet dimensions [mm] (H x W x D)	Number of units
BKZN-7,5	WN-1464-01-01-011	7.5	(3x2.5)	1400 x 600 x 500	3
BKZN-10	WN-1464-01-02-011	10	(2x2)+(1x5)	1400 x 600 x 500	3
BKZN-15	WN-1464-01-03-011	15	(1x2.5)+(1x5)+(1x7.5)	1400 x 600 x 500	3
BKZN-20	WN-1464-01-04-011	20	(1x2.5)+(1x5)+(1x12.5)	1400 x 600 x 500	3
BKZN-25	WN-1464-01-05-011	25	(1x5)+(2x10)	1400 x 600 x 500	3
BKZN-30	WN-1464-01-06-011	30	(3x10)	1400 x 600 x 500	3
BKZN-35	WN-1464-01-07-011	35	(1x5)+(1x7.5)+(1x10)+(1x12.5)	1400 x 600 x 500	4
BKZN-40	WN-1464-01-08-011	40	(1x7.5)+(2x10)+(1x12.5)	1400 x 600 x 500	4
BKZN-45	WN-1464-01-09-011	45	(2x10)+(2x12.5)	1400 x 600 x 500	4
BKZN-50	WN-1464-01-10-011	50	(2x12.5)+(1x25)	1400 x 600 x 500	3
BKZN-55	WN-1464-01-11-011	55	(1x7.5)+(1x10)+(1x12.5)+(1x25)	1400 x 600 x 500	4
BKZN-60	WN-1464-01-12-011	60	(1x10)+(2x12.5)+(1x25)	1400 x 600 x 500	4
BKZN-62,5	WN-1464-01-13-011	62.5	(3x12.5)+(1x25)	1400 x 600 x 500	4
BKZN-70	WN-1464-01-14-011	70	(1x7.5)+(1x12.5)+(2x25)	1400 x 600 x 500	4
BKZN-75	WN-1464-01-15-011	75	(3x25)	1400 x 600 x 500	3
BKZN-87,5	WN-1464-01-16-011	87.5	(1x12.5)+(3x25)	1400 x 600 x 500	4
BKZN-100	WN-1464-01-17-011	100	(2x25)+(1x50)	1400 x 600 x 500	3
BKZN-112,5	WN-1464-01-18-011	112.5	(1x15)+(2x25)+(1x50)	1400 x 600 x 500	4
BKZN-125	WN-1464-01-19-011	125	(1x2)5+(2x50)	1400 x 600 x 500	3
BKZN-150	WN-1464-01-20-011	150	(1x25)+(1x50)+(1x75)	1400 x 600 x 500	3
BKZN-175	WN-1464-01-21-011	175	(1x25)+(3x50)	1400 x 600 x 500	4
BKZN-200	WN-1464-01-22-011	200	(1x25)+(2x50)+(1x75)	1400 x 600 x 500	4
BKZN-225	WN-1464-01-23-011	225	(1x25)+(1x50)+(2x75)	1400 x 600 x 500	4
BKZN-250	WN-1464-01-24-011	250	(2x50)+(2x75)	1400 x 600 x 500	4
BKZN-275	WN-1464-01-25-011	275	(1x50)+(3x75)	1400 x 600 x 500	4
BKZN-300	WN-1464-01-26-011	300	(4x75)	1400 x 600 x 500	4
BKZN-65	WN-1464-01-27-011	65	(2x12.5)+(1x25)+15	1400 x 600 x 500	4
BKZN-90	WN-1464-01-28-011	90	(1x155)+(3x25)	1400 x 600 x 500	4

Capacitor banks cabinets with automatic power control with chokes

Type	Catalogue number	Bank power [kVAr]	Degrees [kVAr]	Cabinet dimensions [mm] (H x W x D)	Number of units
BKDZN-7,5	WN-1465-03-01-011	7.5	(3x2.5)	1600 x 800 x 500	3
BKDZN-10	WN-1465-03-02-011	10	(2x2.5)+(1x5)	1600 x 800 x 500	3
BKDZN-15	WN-1465-03-03-011	15	(1x2.5)+(1x5)+(1x7.5)	1600 x 800 x 500	3
BKDZN-20	WN-1465-03-04-011	20	(1x2.5)+(1x5)+(1x12.5)	1600 x 800 x 500	3
BKDZN-25	WN-1465-03-05-011	25	(1x5)+(2x10)	1600 x 800 x 500	3
BKDZN-30	WN-1465-03-06-011	30	(3x10)	1600 x 800 x 500	3
BKDZN-35	WN-1465-03-07-011	35	(1x5)+(1x7.5)+(1x10)+(1x12.5)	1900 x 800 x 500	4
BKDZN-40	WN-1465-03-08-011	40	(1x7.5)+(2x10)+(1x12.5)	1900 x 800 x 500	4
BKDZN-45	WN-1465-03-09-011	45	(2x10)+(2x12.5)	1900 x 800 x 500	4
BKDZN-50	WN-1465-03-10-011	50	(2x12.5)+(1x25)	1600 x 800 x 500	3
BKDZN-55	WN-1465-03-11-011	55	(1x7.5)+(1x10)+(1x12.5)+(1x25)	1900 x 800 x 500	4
BKDZN-60	WN-1465-03-12-011	60	(1x10)+(2x12.5)+(1x25)	1900 x 800 x 500	4
BKDZN-62,5	WN-1465-03-13-011	62.5	(3x12.5)+(1x25)	1900 x 800 x 500	4
BKDZN-70	WN-1465-03-14-011	70	(1x7.5)+(1x12.5)+(2x25)	1900 x 800 x 500	4
BKDZN-75	WN-1465-03-15-011	75	(3x25)	1600 x 800 x 500	3
BKDZN-87,5	WN-1465-03-16-011	87.5	(1x12.5)+(3x25)	1900 x 800 x 500	4
BKDZN-100	WN-1465-03-17-011	100	(2x25)+(1x50)	1600 x 800 x 500	3
BKDZN-112,5	WN-1465-03-18-011	112.5	(1x12.5)+(2x25)+(1x50)	1900 x 800 x 500	4
BKDZN-125	WN-1465-03-19-011	125	(1x25)+(2x50)	1600 x 800 x 500	3
BKDZN-150	WN-1465-03-20-011	150	(1x25)+(1x50)+(1x75)	1600 x 800 x 500	3
BKDZN-175	WN-1465-03-21-011	175	(1x25)+(3x50)	1900 x 800 x 500	4
BKDZN-200	WN-1465-03-22-011	200	(1x25)+(2x50)+(1x75)	1900 x 800 x 500	4
BKDZN-225	WN-1465-03-23-011	225	(1x25)+(1x50)+(2x75)	1900 x 800 x 500	4
BKDZN-250	WN-1465-03-24-011	250	(2x50)+(2x75)	1900 x 800 x 500	4
BKDZN-275	WN-1465-03-25-011	275	(1x50)+(3x75)	1900 x 800 x 500	4
BKDZN-300	WN-1465-03-26-011	300	(4x75)	1900 x 800 x 500	4
BKDZN-90	WN-1465-03-27-011	90	(2x12.5)+(1x25)+15	1900 x 800 x 500	4
BKDZN-140	WN-1465-03-28-011	140	(1x15)+(3x25)	1900 x 800 x 500	4

ELECTRIC SWITCHGEARS

Automatic transfer switch system

Automatic transfer switch (ATS) devices are used to increase supply reliability for important takeoffs. Their task is to detect excessive decrease or loss of the primary power supply voltage and switch to backup power.
There are ATS systems with overt and covert backup. In ATS systems with overt backup, after detecting primary power failure, reserve power switch is turned on, whereas in systems with covert backup, breaker switch of the coupler.

In terms of ATS operation time, one can distinguish:
- slow ATS devices with a sufficiently long time of operation (above 0.4 s) to suppress residual voltage of rundown motors,
- fast ATS devices with a sufficiently short time (below 0,25 s) to prevent too large difference between vectors of the mains voltage and residual voltage.

There is short ATS cycle when excitation takes place from the moment of opening the primary power switch, and full ATS cycle when excitation takes place from the moment of voltage loss for the primary power supply.
ATS devices are usually installed in auxiliaries networks of utility power plants and industrial power plants, industrial switchrooms that power important takeoffs, as well as in power grid switchrooms.

OUR PROPOSALS

Controller-based ATS systems

We also offer you controller-based ATS systems. We use controllers of most companies present on the market. ATS system status is visualised on control panels, matrix panels and on panels lined on the switchgear door. In the controller version, the ATS system can perform any type of ATS and any switching scenario. Acting on the ATS system status can be performed using switches located on the switchgear door, as well as the touch control panel.

Example of a controller-based ATS system with touch panel, matrix panel and lined panel

ATS systems based on dedicated control panels

We also offer you precise ATS systems based on dedicated control panels for specific cases, network-to-network, network-to-generator, etc. These panels are designed for installations where power reliability is essential. These panels have high measurement accuracy and are highly reliable.

ATS system for multiple incoming feeds, based on the control panels of Energotest-Energopomiar, made for the Wielopole power station

Relay-based ATS systems

We offer you slow relay-based ATS systems in network-to-network version in overt or covert backup configuration, and a network-to-generator for overt backup. Our ATS system can control both contactors and circuit breakers equipped with motor drives, and can be supplied with or without them.

Installing the system is possible in two variants:
- on the mounting plate (e.g. in SWN cabinet made by ZPAS or in any switchgear that has enough space on the plate),
- on 19" frame using a PS-3U panel made by ZPAS.

The systems provide for signalling the presence of voltage across individual power lines and signalling current power line that is supplying takeoffs. Supply is switched from the primary power supply to the backup and then returns to the primary one, once the set delay time has elapsed. The delay is set separately for backup switching and return switching. Switching to backup network or power generator supply is triggered by voltage loss in the primary network or voltage asymmetry in at least one phase of the primary network. For the network-to-generator configuration, also UPS is provided to power the devices that control the ATS system in the event of voltage loss in the primary power supply (in the version where the system is integrated with the PS-3U panel, UPS is not installed inside the panel).

Relay-based ATS system mounted in a cabinet

CABINET PREFABRICATION

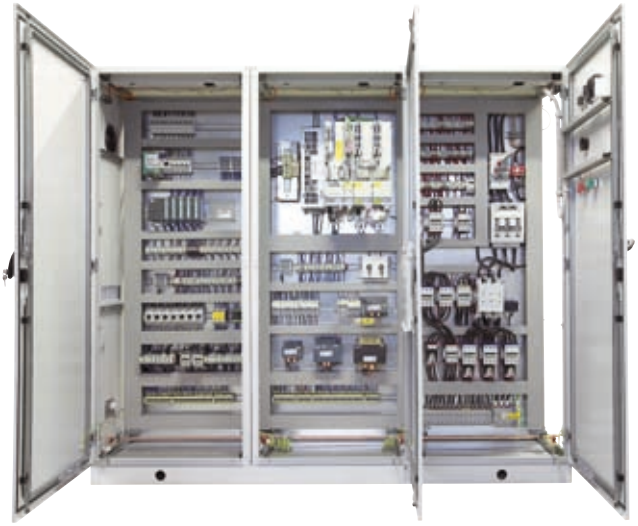

Control cabinet made according to the Customer's design

All enclosures manufactured by ZPAS-NET (made of aluminium profiles) and ZPAS S.A. are provided with electrical equipment according to in-house designs or solutions developed by other design offices according to customers' specifications. We also offer prefabricated products based on generally available enclosures supplied by other manufacturers.

We deliver switchgear, control cabinets, cross-connection cabinets, wiring cabinets, metering cabinets, automatics cabinets and, in cooperation with ZPAS S.A., a complete range of power engineering structures for any application in line with our customers' wishes. In addition to SZE-2/SGP 1250 and SZEW/PE 1600 types, we also manufacture switchgear based on equipment and enclosures supplied by Hager, Moeller, Schrack, ABB and Siemens, for max. 2500 A.

For our switchgear we manufacture input, coupling and output bays with stationary and withdrawable circuit breakers, with knife switches and fuse switches (the latter offered in box and strip versions), as well as horizontal and vertical terminal bays. We deliver output bays equipped with contactors and inverters. We build multipanel switchgear with guaranteed power supply, equipped with SZR systems (in relay and controller versions). We manufacture control cabinets equipped with controllers used for supervising manufacturing processes. We use controllers supplied by Siemens, GE Fanuc, Wago, Beckhoff, Phoenix Contact and other types.

We provide cabinets dedicated for power distribution purposes which can be used in the following applications: cross-connection cabinets, wiring cabinets, control cabinets, lighting cabinets, battery cabinets, protection cabinets, telemechanics cabinets, central signalling system cabinets, metering cabinets, etc. We also offer telecommunication cabinets accommodating telecommunication equipment, provided with a power supply system, ventilation, heating and signalling systems to notify access status, power supply and climatic conditions. The products are made using SZD-type outdoor enclosures. SZD enclosures are also used in the manufacture of wiring cabinets for electric power stations. As a result, the enclosures have a long operating life and optimum climatic conditions for electrical devices, which increases their efficiency and reliability.

We offer equipment for power cabinets for all industries and various types of applications: from power distribution switchgear or wireless power supply solutions, through power supply to motor-driven consumers complete with production process automation, to control cabinets, signalling cabinets, wiring cabinets, etc., with traditional control systems or controllers, with visualisation of manufacturing/technological processes using mimic boards (by our own production) and screen displays. In our power systems we use equipment offered by the majority of European manufacturers, depending on our Customers' preferences, including Apator, ABB, Moeller, J. Müller, Legrand, Hager, Schrack, Schneider, GE, Pokój, Phoenix Contact, Wago, Weidmüller, Dehn, Relpol, Finder and many more.

We always make sure that our products are state-of-the-art, reliable and perfectly safe. As part of our ongoing commitment to client satisfaction, we are pleased to implement any solutions suggested by our Customers.

CABINET PREFABRICATION

Low-voltage distribution cabinet

CABINET PREFABRICATION

LV chamber for 12 kV power distribution station switchgear for oil extraction industry

A set of control cabinets for a gas compressor station

Control box for Power Plant

CABINET PREFABRICATION

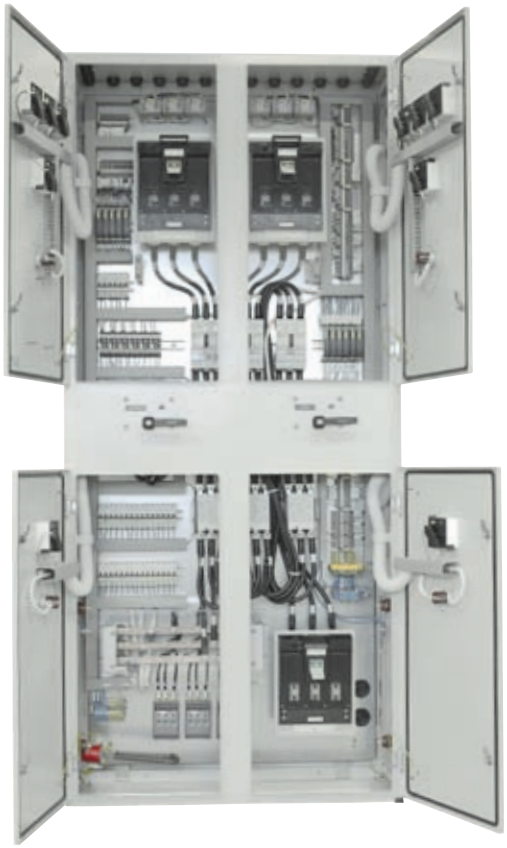

LV switchgear for 35/6 kV power distribution station for oil extraction industry

CABINET PREFABRICATION

220/110/24 V switchgear for a mining company

Set of control and power cabinets for a ceramic plant

CABINET PREFABRICATION

Control cabinet for Machine Tool Factory RAFAMET S.A.

CABINET PREFABRICATION

Excitation cabinet for 600 MW generator

Excitation cabinet for 600 MW generator - rectifier box

Excitation cabinet for 600 MW generator - indication box

CABINET PREFABRICATION

Control cabinets for industrial ceramic factory industrial oven

Control cabinets for molding line of industrial ceramic factory

CABINET PREFABRICATION

Meter cabinet

Cabinet with power equipment control and monitoring system for an underground station

Control and monitoring cabinet with door-mounted computers

CABINET PREFABRICATION

Control and monitoring system cabinet of a 110 kV switchroom transformer panel

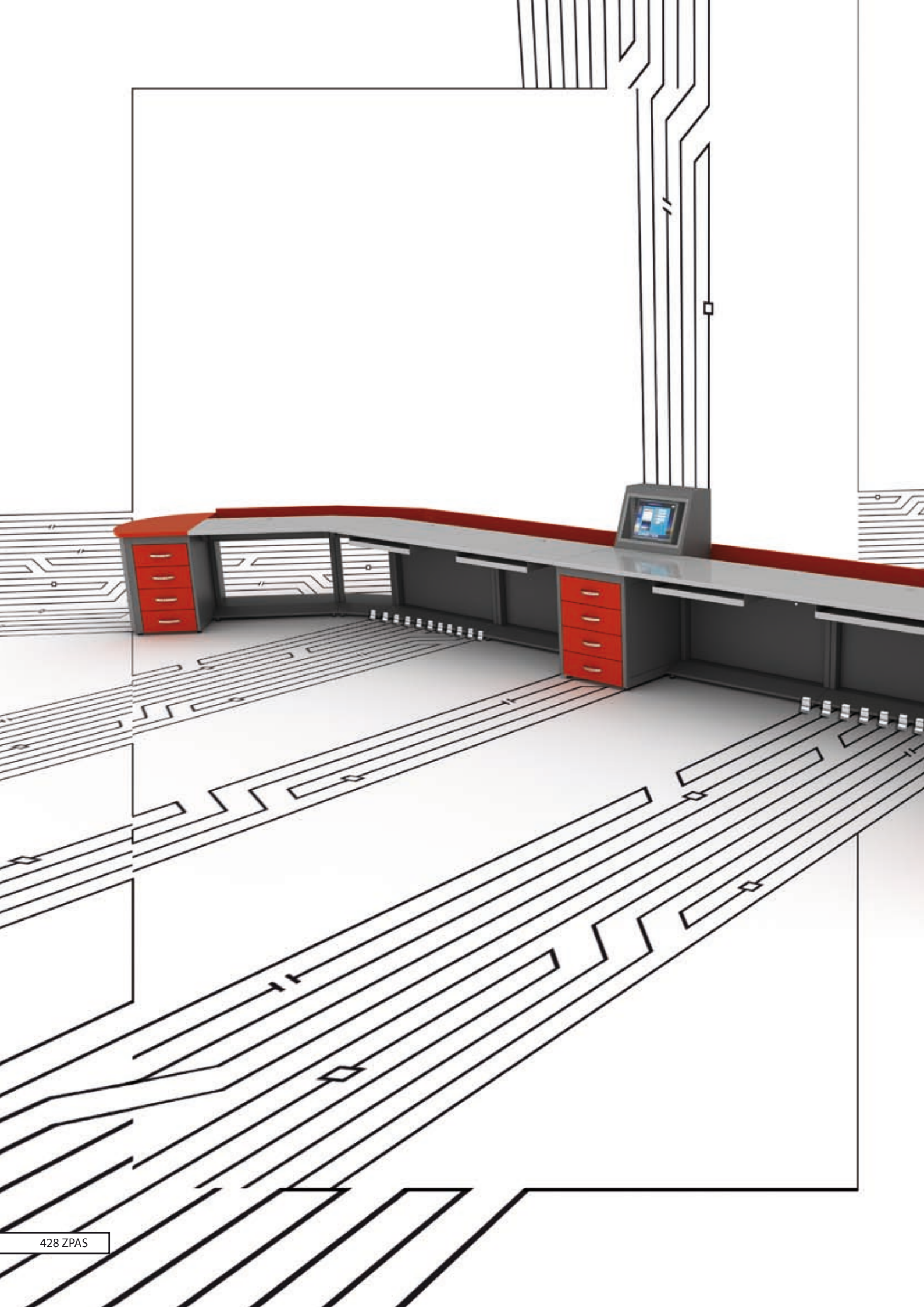

DISPATCH WORKSTATIONS

References for dispatch and control desks 430
General description of desks 431
Designs and presentations..... 432
PDM dispatch and control desks..... 433
Sample customised projects 438
Sample realised projects 439
Modern acrylic for desktops finishing 449

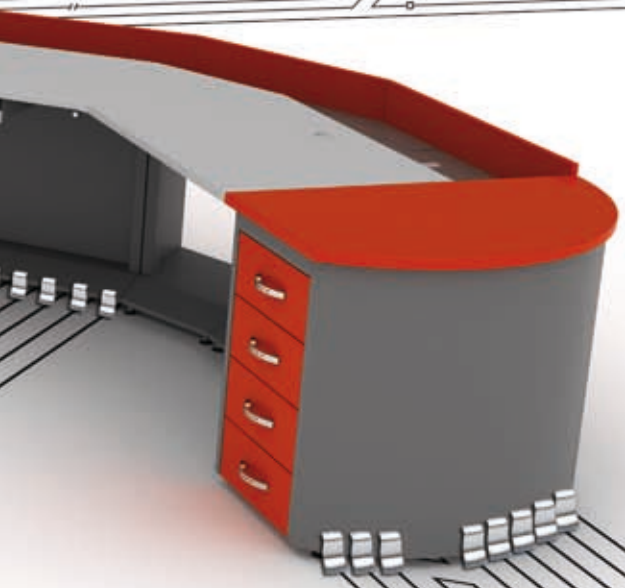

REFERENCES FOR DISPATCH AND CONTROL DESKS

We have thirty years' experience in the production of control and dispatch desks. Throughout the years, we have manufactured hundreds of them. Our desks are mainly designed for power plants, heat and power generation plants, power distribution companies, sugar factories, integrated mills, railway companies, cement plants, chemical plants, gas works, coking plants, hard and brown coal mines and many other sectors of industry and business.

Our product portfolio includes universal modular desks and consoles made on special orders according to the customer's documentation or design developed by us. The product range also incorporates a series of types of standard PSL control desks with a modular design, intended for production lines, tooling centres etc. Each console may be delivered together with complete electric equipment and accessories. Assembly on site is also available on request.

SAMPLE COMPLETED PROJECTS

- **ABB**
  Gas compressor plants in: Kondratki, Włocławek, Ciechanów, Szamotuły, Zambrów; Gas mines in: Dzików, Wilków, Kuryłówka, Palikówka, Tarnów; Heat and power generation plants in: Gorzów, Jaworzno III (blok 6), Zgierz, Władysławowo, Siekierki, Turów, Gdańsk, Rokita, Będzin
- **ABN Russia**
  Earthquake Research Centre; Gazprom
- **BELMATEX Bielsko-Biała**
- **CSC AUTOMATION – Ukraine**
- **Cukrownia Krasnystaw S.A. – Siennica Nadolna (a sugar factory)**
  electrical dispatch room
- **Cukrownia Lublin (a sugar factory)**
  electrical dispatch room
- **CYNK-MAL Sp. z o.o. – Legnica**
- **DAEWOO Motor Polska Sp. z o.o. – Lublin**
  control room of the heat and power generation plant
- **EMERSON PROCESS MANAGEMENT**
  petroleum refinery in Płock; Rafineria Nafty Jedlice S.A. (kerosene refinery); Zakłady Azotowe Tarnów (nitrogen plant); Petrochemia-Blachownia Kędzierzyn-Koźle (petroleum processing and chemical plant); PKN Orlen (crude oil refiner); KWB Bełchatów (a brown coal mine); Elektrownia Bełchatów (a power generation plant)
- **EMPOR Kielce**
  Detention Centre in Piotrków Trybunalski
- **Energetyka Szczecińska (a power distribution company)**
  RDR Goleniów
- **ELEKTROBUD - BYDGOSZCZ Sp. z o.o.**
- **ELBUD – Warsaw**
  Substation Pasikurowice
- **ELKON ELBUD – Cracow**
  Substation Wielopole
- **ELEKTROBUDOWA S.A. in Katowice**
  Heat and power generation plant no. 3 in Łódź; Heat and power generation plant II – Bydgoszcz; control room
- **Heat and power generation plant GIGA Świdnik**
- **ELEKTROMONTAŻ – Katowice S.A.**
- **ELEKTROMONTAŻ – Wrocław S.A.**
- **Heat and power generation plant Kozienice**
  control rooms for blocks 2, 3, 4, 5, 6, 7, 9, 10; control room for demineralisation plant
- **Electric power station Połaniec**
  control rooms for blocks 1, 4, 5; control room of the station's operating engineer; central control room of the power blocks
- **Electric power station Rybnik**
  control room for block 8
- **Electric power station Turów – Bogatynia**
  control room for blocks 8, 9, 10
- **Hydroelectric power station Dychów**
- **ELPRO Leit- und Energietechnik GmbH – Berlin**
- **ELCON ELBUD**
  Substation Wielopole
- **EL PAK**
  Electric power station – Konin
- **ELTARG Dąbrowa Górnicza**
- **ELWRO SYSTEM Wrocław**
- **Energetyka i Technika Grzewcza TERMAL Sp. z o.o. (power and heating company)**
  Zakład Utylizacji Odpadów – Warsaw (a waste disposal plant)
- **EnergiaPro - Wrocław**
  Regional Electric Power Control Facility – local MV control room in Wrocław; Regional Electric Power Control Facility – local LV control room in Wrocław
- **ENERGOAPARATURA S.A. - Katowice**
  EC Zabrze (heat and power generation plant)
- **ENERGOPROJEKT - Gliwice**
- **ENERGOTEST ENERGOINWEST Rybnik**
  Electric power plant in Rybnik
- **ENERGOTEST ENERGOPOMIAR Gliwice**
  Electric power station in Stalowa Wola; Electric power station in Kozienice; PKN Orlen (crude oil refiner)
- **Fabryka Kotłów RAFAKO S.A. – Racibórz**
  (a boiler manufacturing plant)
- **GE Industrial Systems GmbH – Berlin**
- **HONEYWELL Sp. z o.o. – Warsaw**
- **INDUSTRIAL CONTROL Sp. z o.o. – Warsaw**
- **JJK ENERGIE – France**
  consoles for the Ruwais petroleum refinery, Abu Dhabi (United Arab Emirates)
- **JJK ENERGIE – Warsaw**
  Heat and power generation plant Opole
- **Keller – Germany**
  modular desks for Spain and Australia
- **KGHM Polska Miedź S.A.**
  Zakłady Górnicze Lublin (a mining company)
- **KOMSTER Sp. z o.o.**
  modernisation of central railway control stations in Iława, Szczecin, Katowice
- **Kopalnia Węgla Brunatnego – Kleczew (a brown coal mine)**
  dispatch room of the Kazimierz Wielki strip mine; dispatch room of the Lubstów strip mine; dispatch room of the Józefów strip mine
- **LEOLA BALT - Kaliningrad**
- **MAHLE - Krotoszyn**
- **MAGO - HURT Sp. z o.o. - Jelenia Góra**
- **MERCOMP PŁOCK Sp. z o.o.**
- **METSO Automation**
  Electric power plant in Siekierki
  Arctic Paper Kostrzyń
  Electric power plant in Żerań
- **Mostostal Zabrze**
  Electric power plant in Cieszyn
- **Neles Automation**
  Electric power plant in Żerań
- **PHU Normatech S.C. – Starachowice**
- **PPUiH TEJA Sp. z o.o. – Ząbkowice Śląskie**
- **PSE Centrum Sp. z o.o.**
  Control room of the Substation 220/110 kV Mory
- **PSE Operator S.A.**
  Seat of the Transmission System Operator in Konstancin-Jeziorna
- **Prochem – petroleum refinery in Trzebinia**
- **Przedsiębiorstwo Energetyki Cieplnej Bełchatów (heat generation company)**
- **Przedsiębiorstwo Kompletacji i Montażu Systemów Automatyki – Tychy (an automatics plant)**
- **TERMALL Bełchatów**
  Heat and power generation plant in Katowice
- **QMAC Sp. z o.o. – Tarnów**
- **Walcownia Stali Czechowice – Dziedzice (a steel rolling mill)**
- **Westinghause Poland**
  Electric power plant in Gacko – Bosnia and Herzegovina
- **Wrocławskie Kopalnie Surowców Mineralnych S.A. (a mining company)**
- **Zakłady Azotowe Kędzierzyn (a chemical plant)**
  Central control room of the ammonia section
  Control room of compressors in the ammonia section
  Central control room in the nitric acid section
- **Zakłady Azotowe Puławy (a chemical factory)**
- **ZAPIS HARDWARE Ostrów Wielkopolski**
  Electric power station in Połaniec
- **Zakład Energetyczny Będzin (a power distribution company)**
  Operation control room
- **Zamojska Korporacja Energetyczna S.A. (a power distribution company)**
  Regional operation control room - Chełm
- **Zespół Elektrowni Wodnych Porąbka-Żar S.A. in Międzybrodzie Żywieckie (hydroelectric power stations)**
  operation dispatch room; control room of the carburisation section in the heat and power generation plant in Katowice
- **Zespół Elektrowni Wodnych Niedzica (hydroelectric power stations)**
  control rooms for the power station's blocks
- **Zielonogórskie Kopalnie Surowców Mineralnych S.A. (a mining company)**
- **ZSA MERA – PNEFAL Sp. z o.o. - Warsaw**

GENERAL DESCRIPTION OF DESKS

In the area of control and dispatch desks, ZPAS-NET mainly offers products with shape and functionalities adjusted to the needs of a particular facility in which they are to be installed. Such consoles are manufactured according to the documentation supplied by the customer or prepared by our design department. Quite often our consoles are a part of complex orders incorporating matching electrical accessories, mimic boards and on-site assembly.
Because of their round-the-clock use, our desks are made of top-quality materials which guarantee high durability and visual attractiveness. To this aim, our designers co-operate with design offices, architects and ergonomics specialists.

CONTROL DESKS DESIGNED FOR INDUSTRIAL FACILITIES
Control desks can be made entirely of sheet steel. Console shape and dimensions should be tailored to a particular facility and appliances in accordance with customers' individual needs and requirements.

DISPATCH AND DISPATCH/CONTROL DESKS
In the case of dispatch or dispatch/control desks which also perform a function of an operating workstation, the design comprises a base, a desktop, and – if necessary – additional tops.
Desktops are made of a wide range of materials, from wood-like boards to synthetic materials – depending on particular needs and standard requested by the customer. In simple designs which do not call for an application of expensive technologies, double-sided laminated or MDF boards are typically used, in a wide range of colours of the finishing laminate elements. Acrylic materials, such as Paracor or Corian, enable a wider range of applications.
Desktops can also be made of mimic panels which allow quick and easy changes of visual matrix diagrams and arrangements of installed instruments.
Desktops can be equipped with tops of various shapes and dimensions making it easy to install monitors, push buttons, meters, displays or other types of devices.

COLOUR SCHEMES
Metal elements of consoles can be painted, galvanised or made of plain stainless steel, without any extra surface finish. We use epoxy and polyester powder paints, textured, in all colours from the RAL catalogue.

DESIGNS AND PRESENTATIONS

SAMPLE CONFIGURATIONS OF DISPATCH ROOMS

With our experience in industrial design, ergonomics and interior design, we are able to built complete dispatch centres, including desktops and video walls, from designing and preparing graphic presentations through manufacturing and on-site installation.
For examples of dispatch centres see pages 477-479.

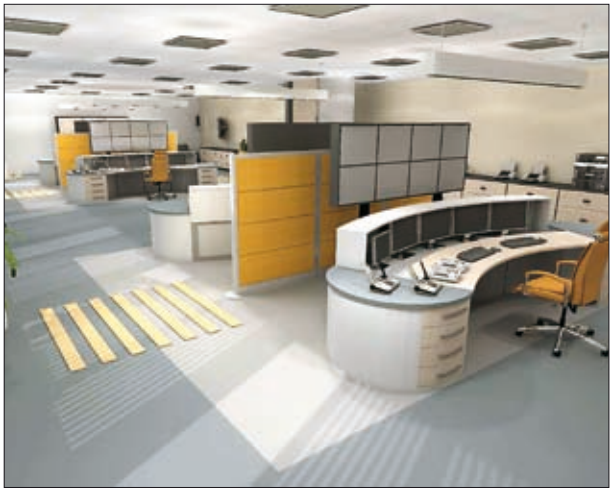

PDM DISPATCH AND CONTROL DESKS

GENERAL DESCRIPTION

The new line of dispatch and control desks produced by ZPAS-NET is based on an innovative design approach incorporating a modular structure.

The main assumption in the process of designing new modular desks was to develop and define a standard which – due to its modular construction – would enable a wide range of available combinations of system elements.

This solution, compared to traditional one-piece designs, costs less and can be delivered to the end customer within a shorter time. Now a potential customer can choose between a number of standard modules which – assembled together – make up the finished product.

An appropriate selection of elements makes it possible to adjust desktop colour to the overall colour scheme of a given room or to specific customer requests.

Moreover, the structure itself, based on a central frame, makes it possible to use different finishing materials, which gives customers a possibility to choose between more economical and more luxurious versions.

In terms of industrial design, the main idea of new modular consoles is based on the development of several interchangeable elements marked by innovative shape and construction properties.

Modular structure enables to adjust consoles to virtually every dispatch/control room.

PDM DISPATCH AND CONTROL DESKS

COMPONENTS

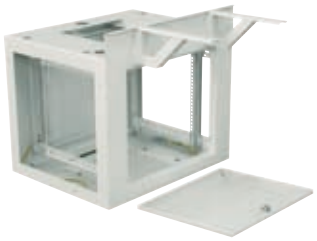

PC module

A two-tier 19" cabinet designed for installing the central unit of the system or other types of electronic devices. The upper part of the cabinet is used as a support for the operating desktop, while the lower (rear) part is designed for placing monitors. Two PC modules are designed for one workstation.

Cylinder with 8 drawers

A central unit which makes it possible to arrange sets at any desired angle.

It can be connected to:
- the PC module,
- the shield joining the cylinder with the PC module

Half-cylinder with 4 drawers

A side element for closing the set.

It can be connected to:
- the PC module,
- the shield joining the cylinder with the PC module,
- the other half of the cylinder (central module)

15° wedge

The wedge enables bending sets by 15°. If more than one wedge is used, then the bending angle can be increased.

It can be connected to:
- the PC module

Side wedge

An end element (without drawers).

It can be connected to:
- the PC module.

Rear shield

A shield for covering the rear space between the cylinder and the PC module.

It can be connected to:
- the PC module,
- the cylinder as the central element of the console

Desktops

Desktops, sides, tops and other elements of consoles can be make of modern synthetic materials - depending on customers' needs and the required standard. Given the fact that they are used round-the-clock, consoles must be made of high-quality materials ensuring long durability and visual attractiveness.

Desktops of the proposed modular control and dispatch desk are made of the following materials:
- Chipboard, laminated on both sides, with edges protected by PCV strip matching the colour of the desktop.
- MDF board, laminated, with increased resistance to abrasion, with edges protected by PCV strip matching the colour of the desktop.
- Modern synthetic materials, for example Paracor/Plexicor, Corian, SSV

PDM DISPATCH AND CONTROL DESKS

OVERALL DIMENSIONS OF COMPONENTS

An appropriate configuration of the typical components described above allows to create a virtually unlimited number of operator workstations.

STRAIGHT-LINE DOUBLE-STATION DESK

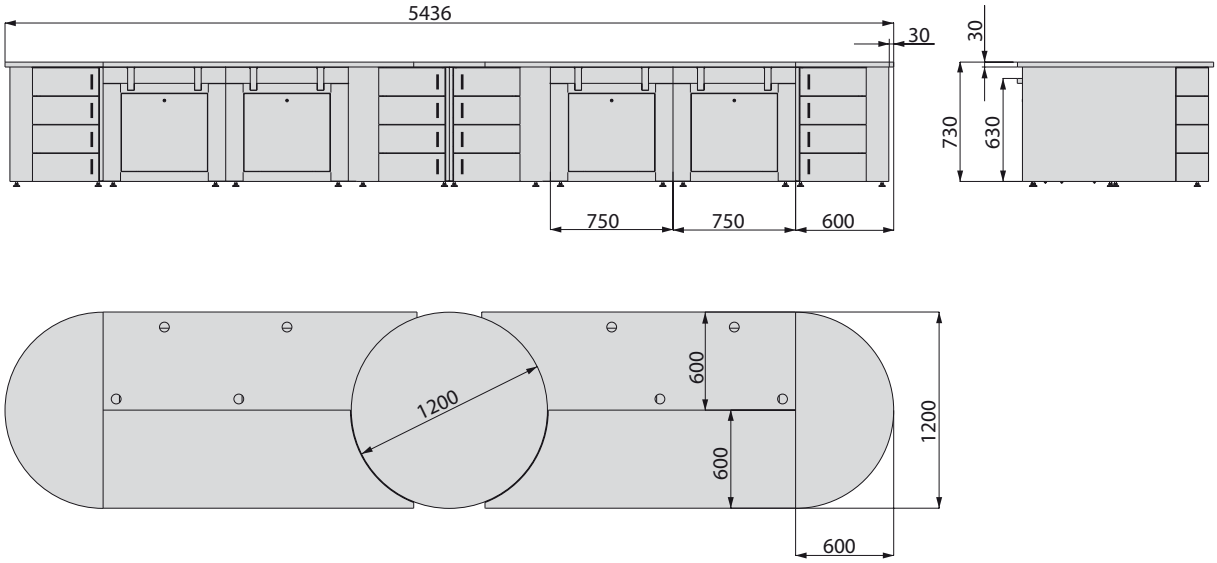

SINGLE-STATION DESK

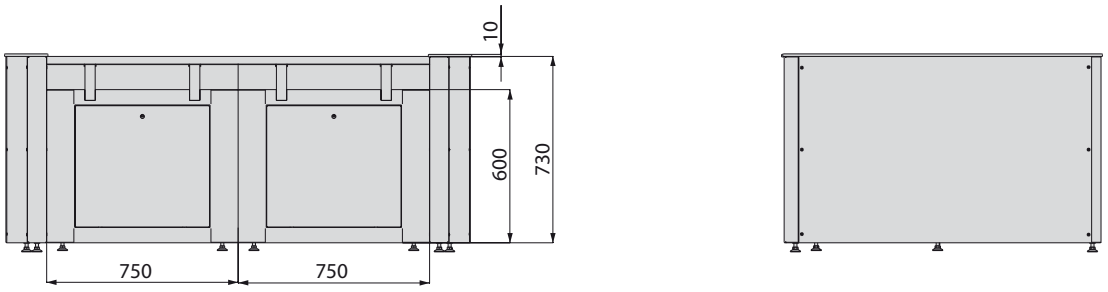

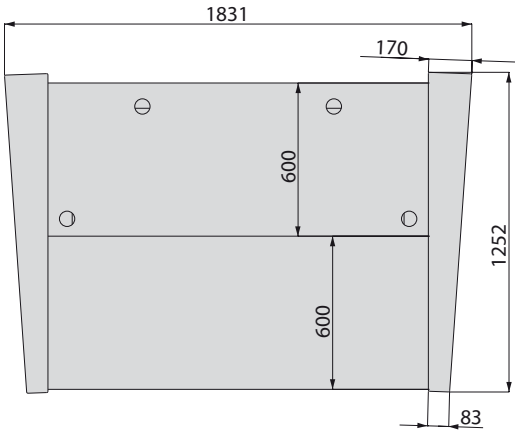

- PC cabinet (width x height x depth): 750 x 600 x 600 mm;operational height of the PC cabinet: HU = 10 U (U = 44.45 mm)
- Central cylinder: d = 1200 mm, h = 730 mm

Other dimensions are specified in the drawing. Based on overall dimensions, it is possible to configure consoles according to customers' specific needs, intended applications and room dimensions.

PDM DISPATCH AND CONTROL DESKS

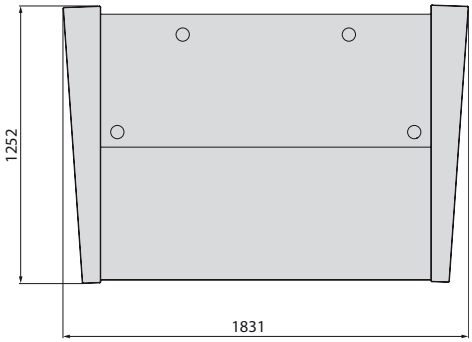

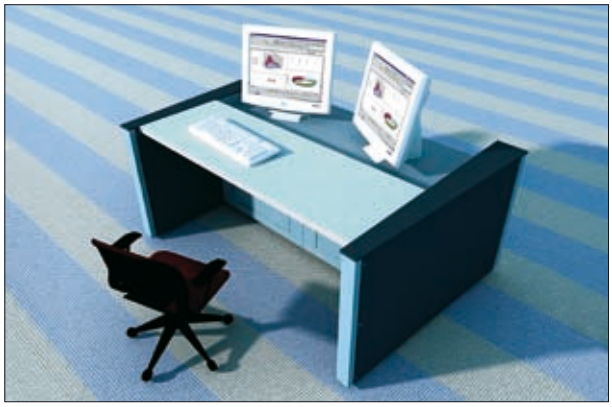

Single-station desk

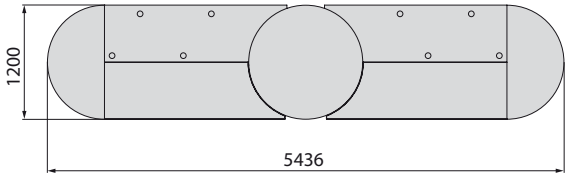

Straight-line double-station desk

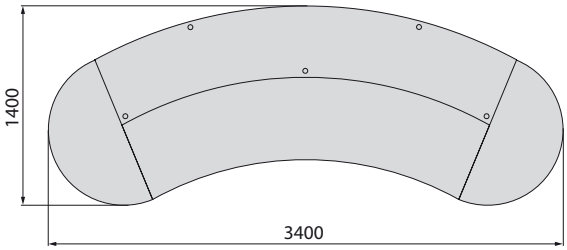

Arch-shaped single-station desk

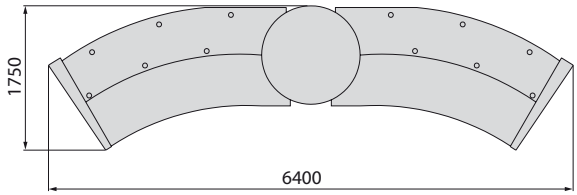

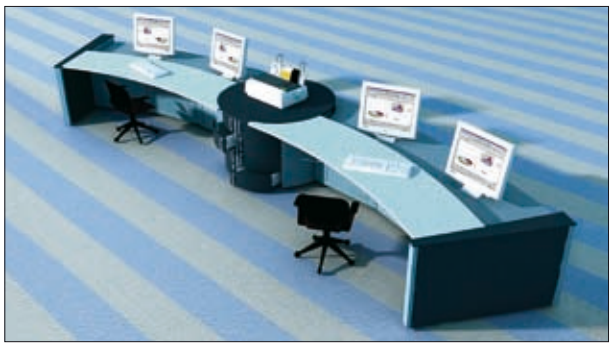

"Broken-line" double-station desk

SAMPLE CUSTOMISED PROJECTS

Single-station desks

Desks made up of standard 19" metal cabinets, a side element and an MDF board desktop with increased mechanical resistance and quality.

Furniture control desk

The product consists of a metal supporting structure, as well as desktops and cupboards made of laminated chipboard. The sides of the desk are equipped with covers. In the back section there is a computer shelf and cupboards with sliding doors.

SAMPLE REALISED PROJECTS

Regional Power Dispatch Facility in Wrocław

A PDM-type modular control desk installed in the medium-voltage dispatch room.

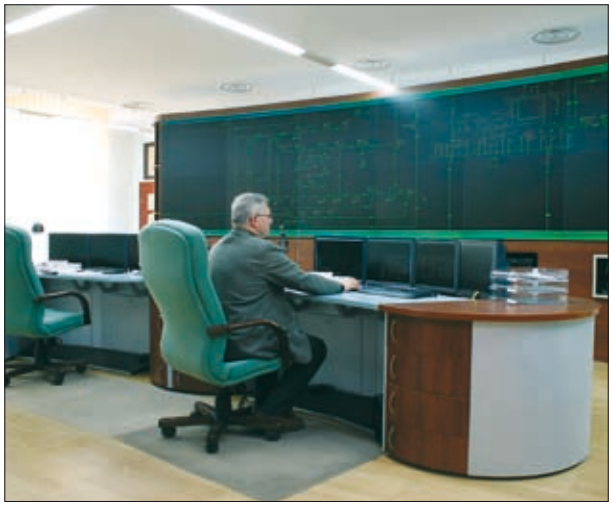

Regional Power Dispatch Facility in Wrocław

An ARCUS-type modular control desk installed in the low-voltage dispatch room.

Municipal Police in Nowa Ruda

ARCUS modular desk in the town's monitoring centre

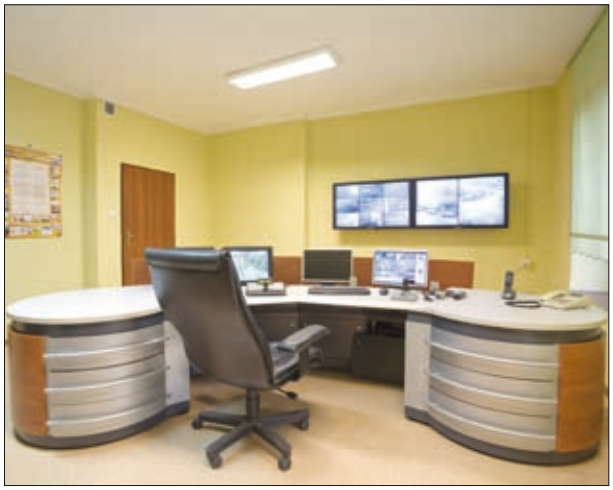

SAMPLE REALISED PROJECTS

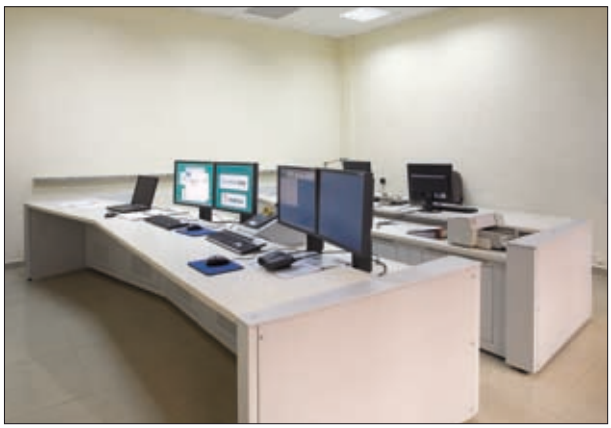

Chemical plant Kędzierzyn S.A.

PDM modular desks in the central control room of the nitric acid section and in the control room of the nitro-chalk and new neutralization systems.

SAMPLE REALISED PROJECTS

Chemical plant Kędzierzyn S.A.

PDM-type modular control desks in the central control room and compressor control room of the ammonia section.

SAMPLE REALISED PROJECTS

Control room of a power station in Warsaw

A PDM-type modular control desk

SAMPLE REALISED PROJECTS

Electric power station in Połaniec

ARCUS-type modular control desks installed in the central control room.
Dispatcher workstations of all power station blocks are located in one room.

SAMPLE REALISED PROJECTS

Power control room of electric power station in Skawina

PDM-type modular control desk with a mimic board undergoing modernisation.

SAMPLE REALISED PROJECTS

Gas compressor plant in Ciechanów

A PDM-type modular desk in the control room of the gas compressor plant.

SAMPLE REALISED PROJECTS

EnergiaPro S.A.

PDM modular desks installed at the Plant Dispatching Centre in Wrocław

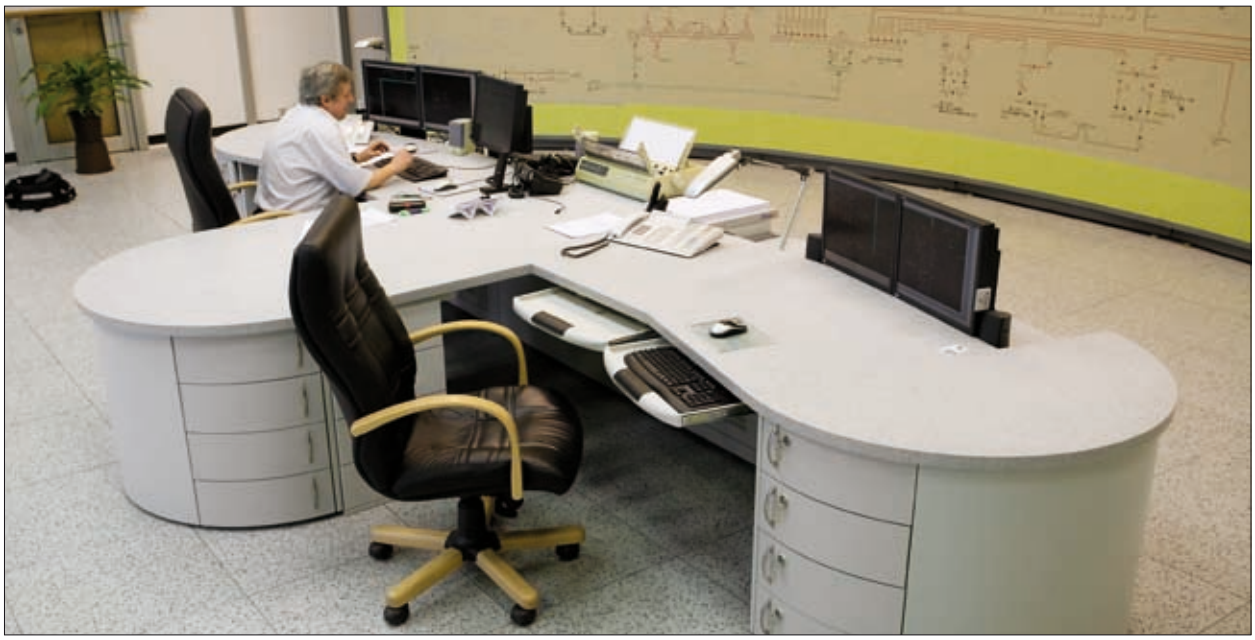

SAMPLE REALISED PROJECTS

Regional Power Dispatch Facility in Katowice

A set of dispatch/control desks made according to an original architectural design.
The scope of delivery also included a mimic board which is seen at the back of the photograph.

Control desk supplied to GAZPROM Russia

A set of dispatch/control desks made according to an original architectural design. The operating part of the desktop is made of Corian, while the narrower rear part is designed for installing LCDs.

SAMPLE REALISED PROJECTS

“WARTA” S.A. waste treatment plant in Częstochowa

Desk made according to an original architectural design.

MODERN ACRYLIC FOR DESKTOPS FINISHING

Desktops, sides, top segments and other elements of control desks can be made of modern materials such as Corian, Staron or HI-Macs.

- The materials are acryl-mineral composites which are excellent for producing solid and hygienically clean surfaces. Manufactured in the form of boards, they provide a variety of colours with different shades and patterns. Desktops are usually made of boards 6 mm thick.
- Their homogenous structure can be easily cut, milled, planed, drilled, shaped and connected at will to meet specific requirements, which makes it possible to realise even extremely complicated projects.
- All joints and connections are made with two-ingredient glues, mixed in appropriate ratios at a temperature not lower than 15 °C. Gluing durability is at least 30 MPa.
- Corian, Staron and HI-Macs materials are pleasing to the touch and they feel warm. Their smooth surface makes them very easy to clean.
- They do not absorb odours or liquids, nor they attract static electricity. There are no contradictions as to their contact with food. They are classified as fire retardants.
- They are resistant to the majority of chemical agents, high temperatures and mechanical damage (cracks, scratches). Any signs of wear and tear can be easily removed without a trace.
- A wide selection of more than forty colours and textures (pastel, uniform, grainy or striated) offers exceptional design and production possibilities.

Desktop cover with Corian type material and Copper strip used for reduction of electrical tention.

Color pattern and examples of Staron material

The most often chosen type Staron material colour

The most often chosen type HI-Macs material colour

Color pattern and examples of HI-Macs material

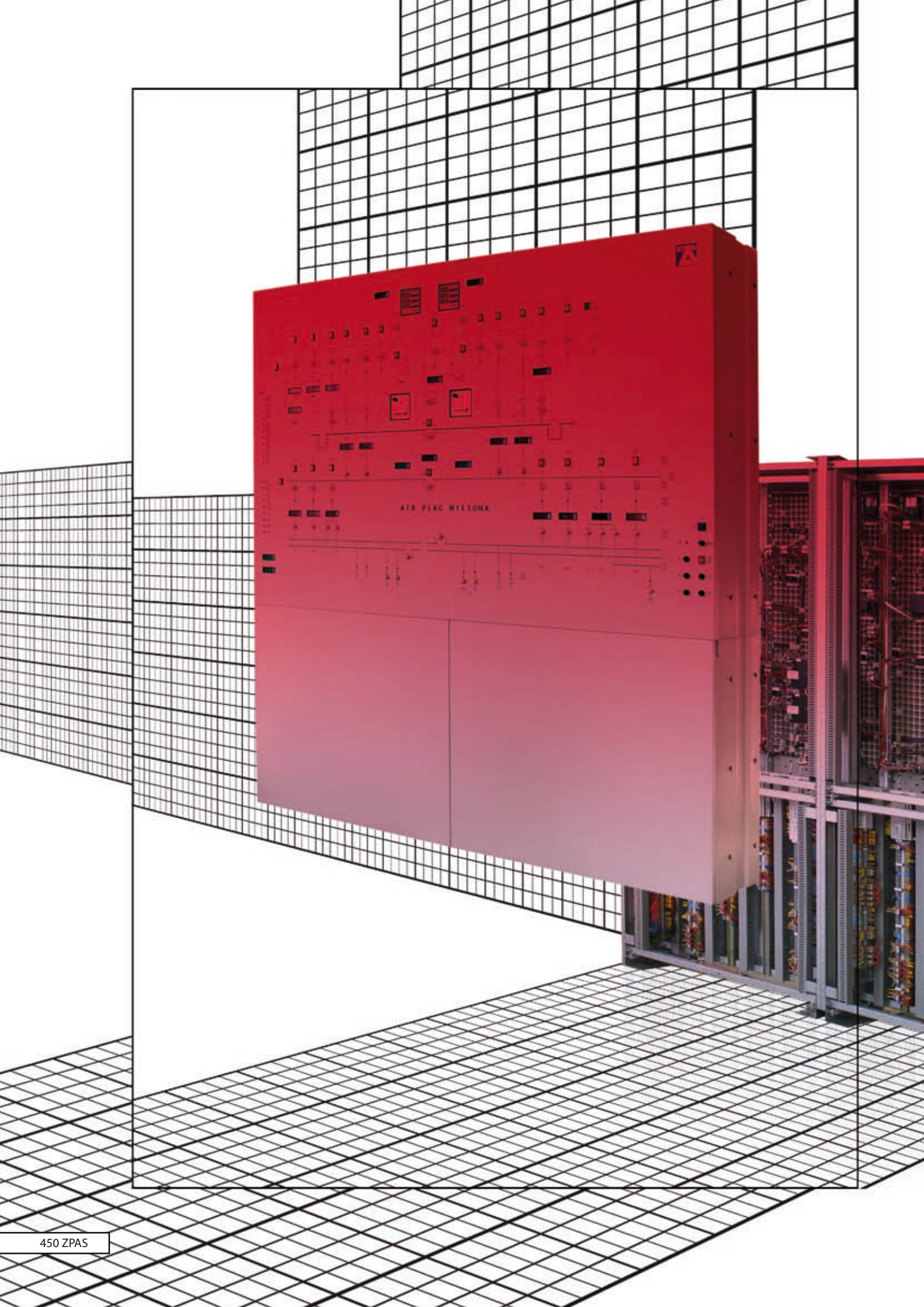

450 ZPAS

MIMIC BOARDS

General description of mimic boards 452
References for mimic boards 453
Design of mimic boards 454
Elements of the support structure of free-standing boards 455
Matrix elements of mimic boards 456
Device assembly 458
Front panel colour schemes 459
KSD signal boxes 460
KCS-1 central signal box 461
Sample realised projects 462
Comprehensive control room projects 477

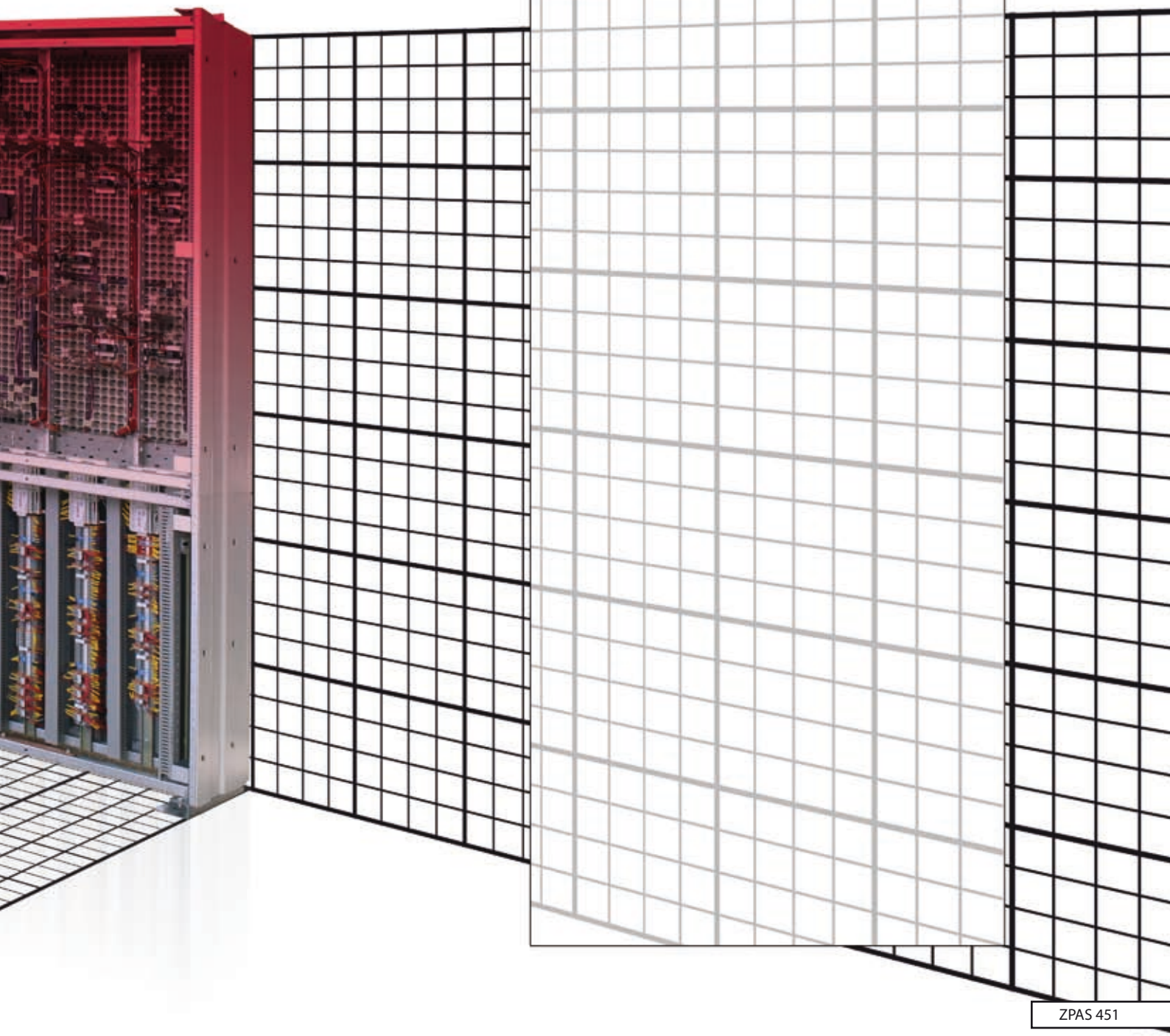

GENERAL DESCRIPTION OF MIMIC BOARDS

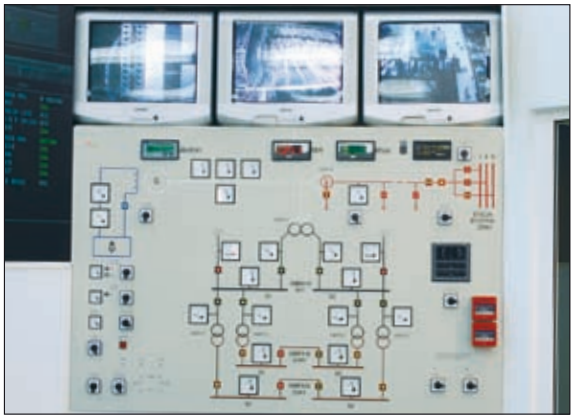

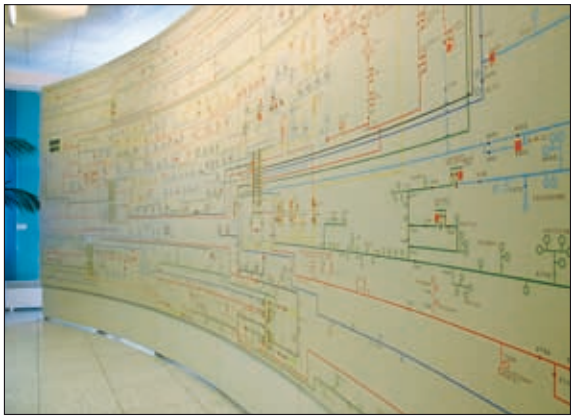

Mimic panels allow to graphically represent technology processes, diagrams of power networks, water supply and distribution network, gas grids, plans and other individually arranged solutions. With the application of modern, complex and automated technologies, mimic boards serve as a visualisation tool effectively supporting control and management processes. Thanks to the use of modules incorporating light components, it is possible to instantly visualise expanding and changing processes and to reflect the operating condition of devices by means of LED signalling with an option of control from front panel devices.

ZPAS-NET is a leading producer of dispatch mimic boards in Poland. Mimic matrix boards are mainly produced for the power sector, for electric power stations, heat and power generation plants, sewage treatment plants, the mining industry, chemical industry, water supply systems, monitoring systems of industrial facilities, etc. Virtually all local and regional power dispatch centres in Poland are equipped with our mimic boards.

Assembly and commissioning of mimic boards at customers' facilities are performed by teams of specialists. Our experts also expand, modernise, develop and modify existing boards. We offer quick and continuous maintenance services. ZPAS-NET keeps abreast of changing market requirements, launching innovative solutions dictated by emerging needs related to the visualisation of power networks and industrial processes.

Mimic boards are available in two dimensions:
STM, with 25 x 25 mm raster, and DTM, with 24 x 24 mm raster.

DTM boards are perfectly suited for incorporating analogue indicators without the necessity to use additional covering elements. The basic lighting components of mimic boards are LED modules (with one or many LEDs). There are also other elements fixed in the board's surface, including pushbuttons, switches, controllers, digital displays, analogue and digital meters, signal boxes, analogue and digital clocks, monitors, visual screens, etc. Updating and changing of board images is quick and easy thanks to special caps placed on the frames.

Self-latching caps used in the DTM and STM systems allow for expansion according to individual needs. The matrix surface takes one of four forms: straight, radial (polygonal), broken-type and cabinet-type (wall-mounted). Thanks to specially profiled edges, it is possible to finish boards without visible divisions between individual panels. Cycolac, the material used to make board panel elements, is highly flexible, extremely resistant to temperatures and lightweight. In addition, it has hygiene and fire retardation certificates issued by Polish Scientific Institutes. The material makes it possible to obtain products which are very resistant, flexible and visually attractive. Mimic boards with diagrams are easily adjustable and expandable depending on user needs; flexibility is the main advantage of the design offered. All clean caps can be inserted quickly and easily into any point on the board. Panels with devices and caps can be easily installed in control desks, rotary frames and control cabinet doors.

REFERENCES FOR MIMIC BOARDS

Boards for the power industry

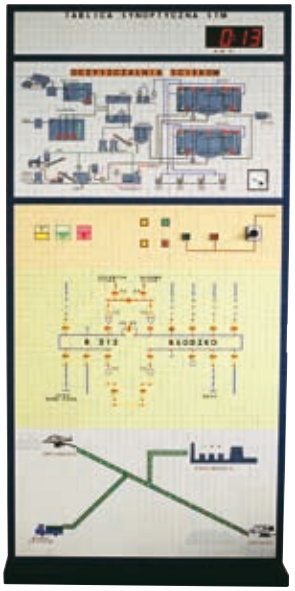

- **NATIONAL POWER DISPATCH CENTRE**
  Warsaw and Konstancin-Jeziorna.
- **REGIONAL POWER DISPATCH FACILITIES**
  Katowice, Poznań, Radom…
- **LOCAL DISPATCH UNITS AND POWER CONTROL CENTRES**
  Białystok, Bielawa, Bielsk Podlaski, Brodnica, Chełm, Chodzież, Choszczno, Dąbrowa Tarnowska, Dębica, Dębno Lubuskie, Dzierżoniów, Gdańsk, Gdynia, Grudziądz, Kędzierzyn-Koźle, Kluczbork, Krasnystaw, Legionowo-Warszawa, Lubań, Łomża, Międzyzdroje, Myszków, Nowa Sól, Oborniki Śląskie, Ostrołęka, Piła, Poznań, Rypin, Starogard Gdański, Stargard Szczeciński, Strzegom, Tomaszów Lubelski, Toruń, Trzebnica, Wałbrzych, Wejherowo, Wielopole, Włocławek, Wyszków, Zamość…
- **IN-HOUSE DISPATCH CENTRES**
  Będzin, Białystok, Bydgoszcz, Gorzów Wielkopolski, Wałbrzych, Zielona Góra…
- **ELECTRIC POWER STATIONS**
  Bełchatów, Dolna Odra, Porąbka-Żar hydroelectric power station, Jaworzno II, Jaworzno III, Konin, Kozienice, Opole, Pątnów, Połaniec, Siersza, Skawina, Turów, Niedzica hydroelectric power stations…

Boards for technology industries

- **HEAT AND POWER GENERATION PLANTS**
  Białystok, Bydgoszcz, Cieszyn, Chrzanów, Czechnica, Gdańsk, Janikowo (Janikosoda), Kalisz, Katowice, Karolin, Kraków, Łódź, Siedlce, Siekierki, Starchowice, Tarnobrzeg, Tychy, Władysławowo, Zgierz, Żerań…
- **WATER SUPPLY/DISTRIBUTION COMPANIES AND MUNICIPAL SERVICES COMPANIES**
  Będzin, Bydgoszcz, Dziećkowice, Legnica, Łódź, Płock, Przemyśl, Puławy, Słupsk, SUW Dąbrowa in Łódź, SUW Teofilów in Łódź, SUW Kalinko in Łódź,Warsaw-Śródmieście, Zakład Wodociągów i Kanalizacji Łódź (a water supply and sanitation company) – dispatch room in the water production section, Zakład Wodociągu Praskiego in Warsaw (a water supply company), ZUN Ropica Polska, Żary…
- **WASTEWATER TREATMENT PLANTS**
  Bielsk Podlaski, Bydgoszcz, Gniewkowo, Gorzkowice, Gostyń, Gubin, Hel, Jędrzychowice, Kłaj, Knurów, Konin, Koronów, Kostrzyń, Legnica, Leszno, Mielno, Nowa Sól, Radocha near Sosnowiec, Radomsko, Radzyń Podlaski, Rawicz, Staszów, Suwałki, Ścinawka Dolna, Szlachcin, Trzemeszno, Ustka, Wałcz, Zbęszyń.
- **CENTRAL RAILWAY CONTROL STATIONS**
  Częstochowa, Iława, Kielce, Lublin, Opole, Poznań, Sopot, Warsaw…
- **CONTROL ROOMS FOR UNDERGROUND RAILWAYS AND TRAM NETWORKS**
  Warsaw Underground – stations A1-A15, Warsaw Underground at Plac Wilsona, municipal transport companies: MPK Kraków, MPK Poznań ("quick tram" line)
- **GAS COMPRESSOR PLANTS**
  Gdańsk - Gdynia, Jarosław, Kondratki, Maćkowice, Mirocin…
- **MINES**
  Hard coal mines: Bielszowice, Borek-Miechowice, Chwałowice, emergency management centres in Czeladź, Janina, Jasmos, Murdzki, Piekary, Rymer, Siemianowice, Śląsk, Szombierki-Bytom, Zdzieszowice, Ziemowit, Zofiówka.
  Brown coal mines: Adamów, Bełchatów, Sośnica, Turów…
- **SUGAR FACTORIES**
  Lublin, Łubna, Opole, Opole Lubelskie, Ostrowy, Ropczyce, Włostów, Wrocław…
- **MONITORING BOARDS**
  Swimming pool in Gostyń, National Library in Warsaw, Renaissance Tower building in Warsaw, Polish-German Federation building, Polkomtel building, ELPRO in Berlin, Hotel Port Okęcie, Hotel Poznań, Hotel Zakopane, Huta Zawiercie (a steel plant), KDM in Warsaw, Okęcie Airport in Warsaw, Wrocław Airport, PFC Poznań, Supreme Court in Warsaw, Telekomunikacja Polska S.A. in Warsaw.
- **POWER DISTRUBUTION BOARDS**
  PKN Orlen (crude oil refiner)

DESIGN OF MIMIC BOARDS

FREE-STANDING BOARDS

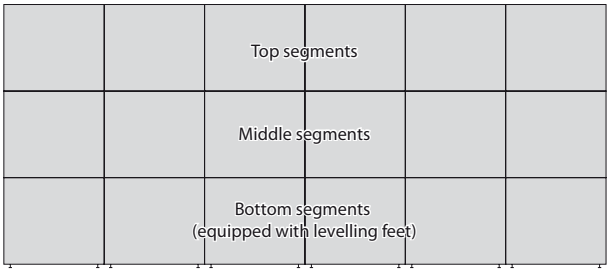

Flat board
- with evenly aligned segments
- flat front panel

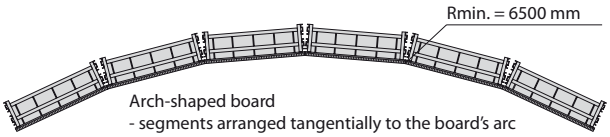

Arch-shaped board
- segments arranged tangentially to the board's arc
- front panel profiled according to the board's arc
- minimum radius of the arc R = 6500 mm

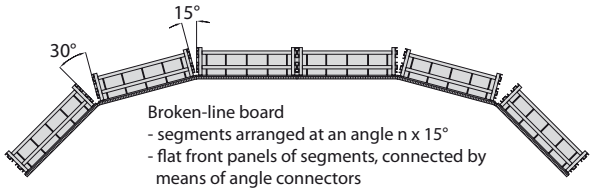

Broken-line board
- segments arranged at an angle n x 15°
- flat front panels of segments, connected by means of angle connectors

Mimic board in the shape of a triple arm stand

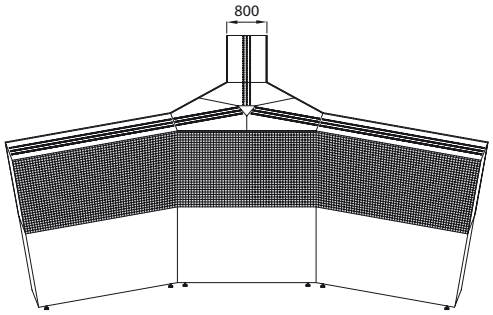

Designed specifically for small control rooms or dispatch centres where, due to inadequate space or for reasons of economy, it is not possible to put up a simple or split structure. The mosaic of the board is mounted on each arm of the star shape. Boards made in this version require at least three operators.

Double-sided board

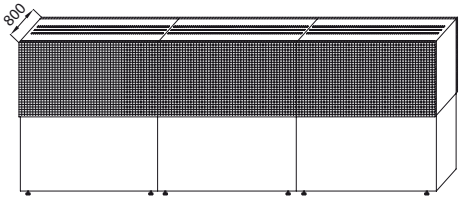

Designed for small control rooms or dispatch centres. The mosaic of the board is mounted on both sides of the structure (in the front and at the back). Boards made in this version require at least three operators.

WALL-MOUNTED CABINET-TYPE BOARDS

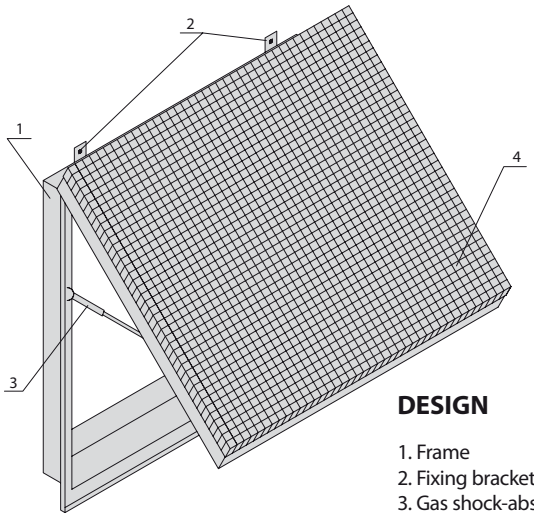

DESIGN

1. Frame
2. Fixing brackets
3. Gas shock-absorber
4. Front section with a matrix panel

ELEMENTS OF THE SUPPORT STRUCTURE OF FREE-STANDING BOARDS

DESIGN

1. Lower frame
2. Upper frame
3. Angle sections
4. Connecting rails
5. Front channel section
6. Connecting sections
7. Mounting brackets
8. Truss panel made of plastic frames with 24 mm or 25 mm grid units (material: Cycolac plastic)
9. Aluminium roller shade
10. Side cover
11. Pins
12. Feet

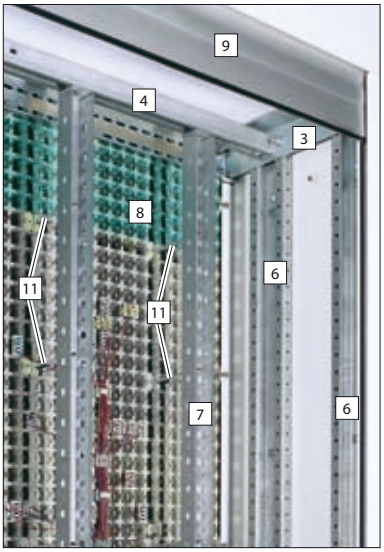

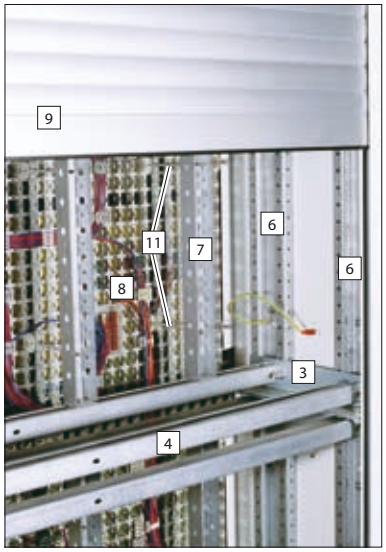

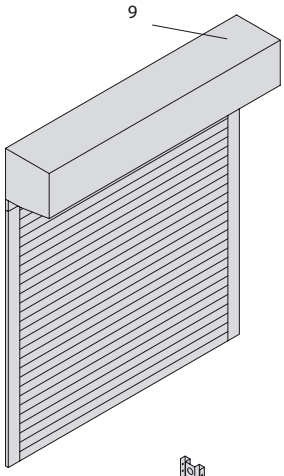

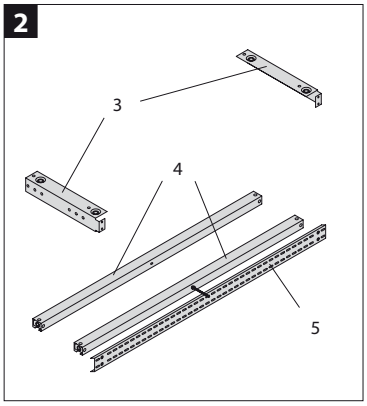

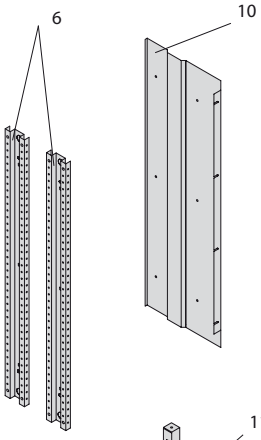

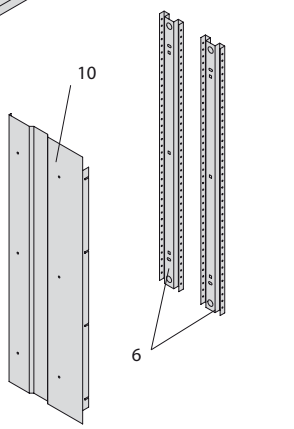

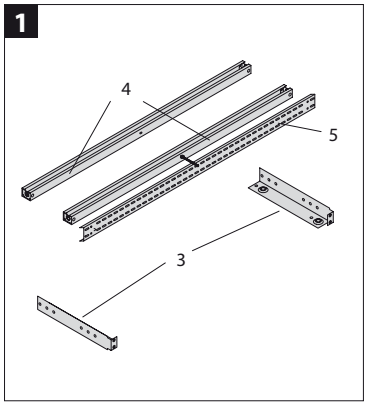

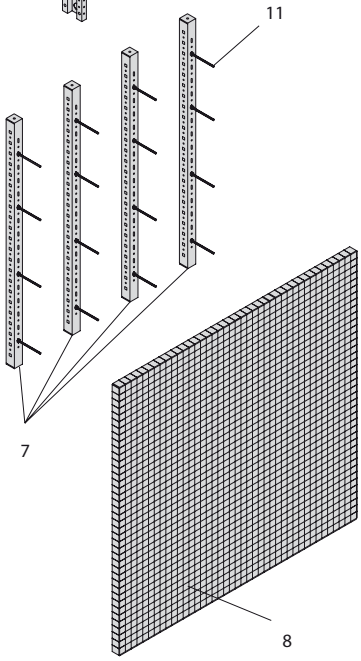

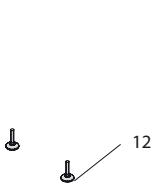

MATRIX ELEMENTS OF MIMIC BOARDS

Matrix boards are available in two systems:

- DTM 24 x 24 mm, made of M24 and M12 modules,
- STM 25 x 25 mm, made of M25 and M12,5 modules.

M24

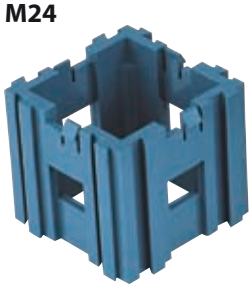

M25

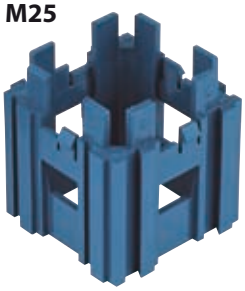

FRAME
An element of the self-supporting board structure, forming the central frame of the board's front panel into which caps are inserted.

M12

M12,5

FIXING CATCH
Mounted inside the frame, used to fix the board to the support structure.

M12

M12,5

FRAME EXTENSION
Mounted inside the frame, designed for cap fixing.

M24

M25

CABLE BUNDLE SUPPORT
An element cooperating with the clip, protecting conductors extending from the lighting modules in the rear section of the board.

M24

M25

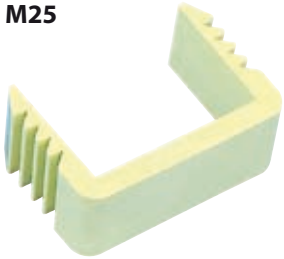

CLIP
An element used to fix cable bundles on the inside of the front panel.
An element cooperating with cable bundle support.

M24

M12

M12,5

M25

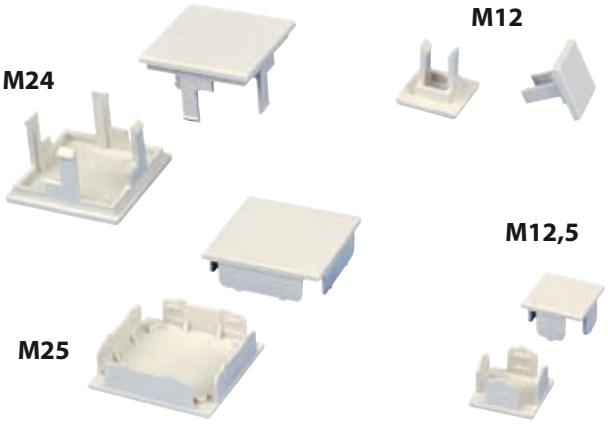

CAP
An element forming the front section of the board, featuring matrix elements plotted by screen printing.

MATRIX ELEMENTS OF MIMIC BOARDS

LED CONNECTOR
Used to fix LEDs via single-roll strips to the exclusion of PCB.

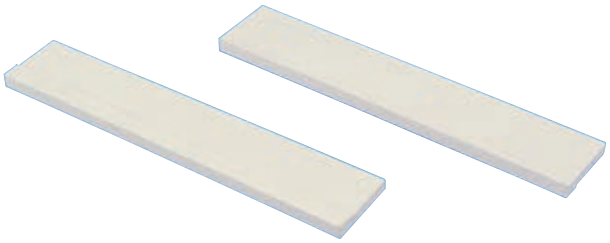

FRAME
Used to mount various meters and other devices on the board's front panel.

M24 **M25**

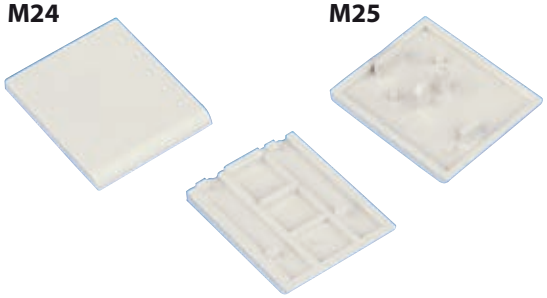

SIDE COVERING PANEL
Fixed on the external side walls of the board's frames.

PCB HOLDER
An element used to fix the PCB in the frame.

ILLUMINATED ELEMENTS
Mounted in caps. Designed for the diffusion of light emitted by LEDs.

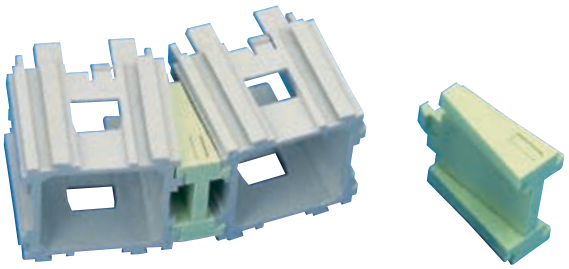

ANGLE CONNECTOR
Used for joining elements of the board's front panel at an angle.

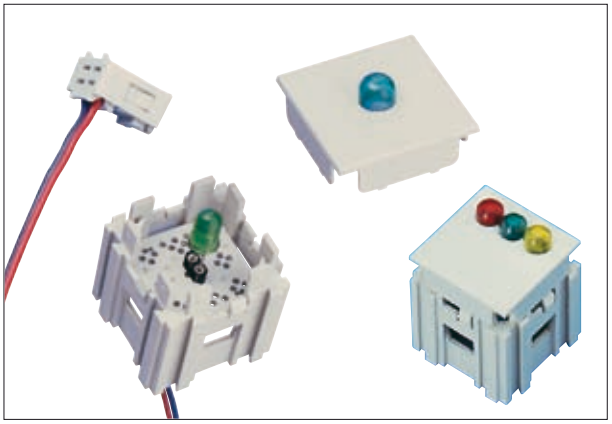

The signalling elements in STM and DTM mimic boards are LEDs. In order to ensure high effectiveness of visualisation, high-luminosity LEDs are used. A variety of LED types and dimensions are employed, depending on particular signalling requirements, e.g. red, green, yellow, blue, single- and multi-colour.

Upon customer request, LEDs are equipped with current-limiting resistors, separation diodes or other matching circuits depending on the type of controller used. Within the matrix, LEDs can be extended to the terminal strips, terminal plates or plates with ends adjusted to a particular controller type.

DEVICE ASSEMBLY

ZPAS-NET mimic boards offer a possibility of installing meters, indicators, displays, switches, controllers, etc., however in consideration of the fact that customers use a wide variety of different devices, their installation in the mimic boards is always tailored to individual needs and requirements.

Since the majority of devices is designed for assembly on thin front panels made of sheet metal, some devices must be provided with special clamping rings or support brackets (particularly if the weight of a given device may cause front panel deformation).

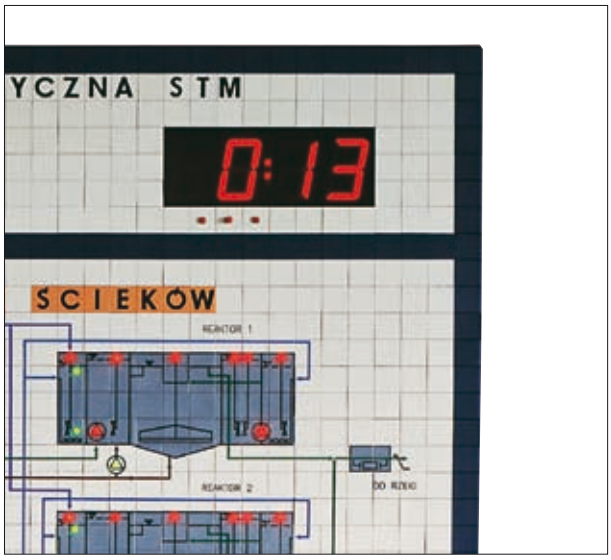

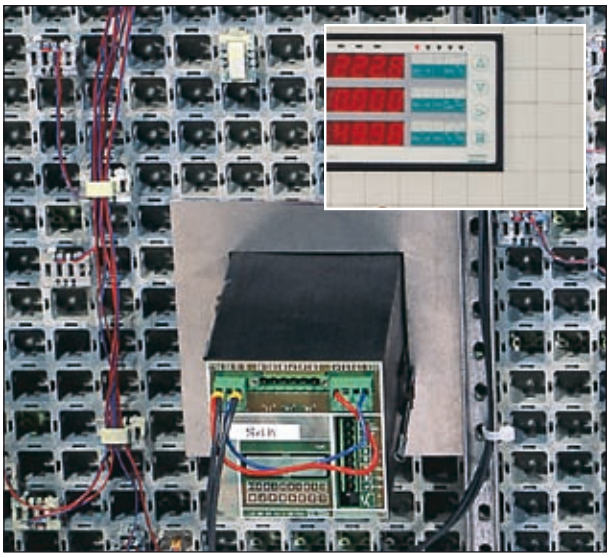

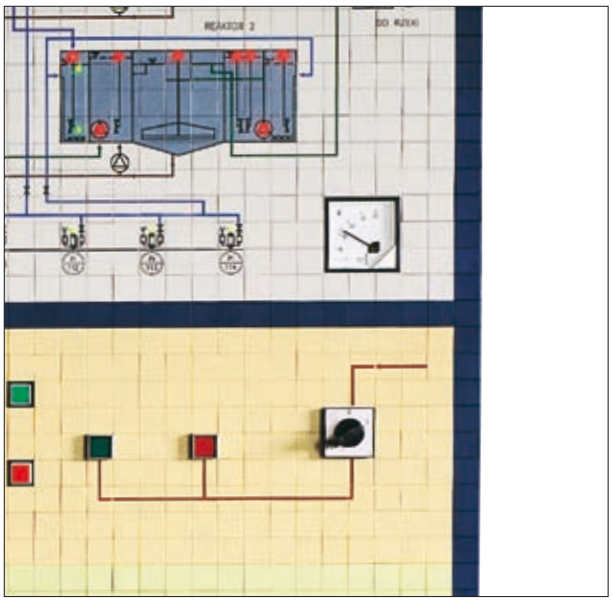

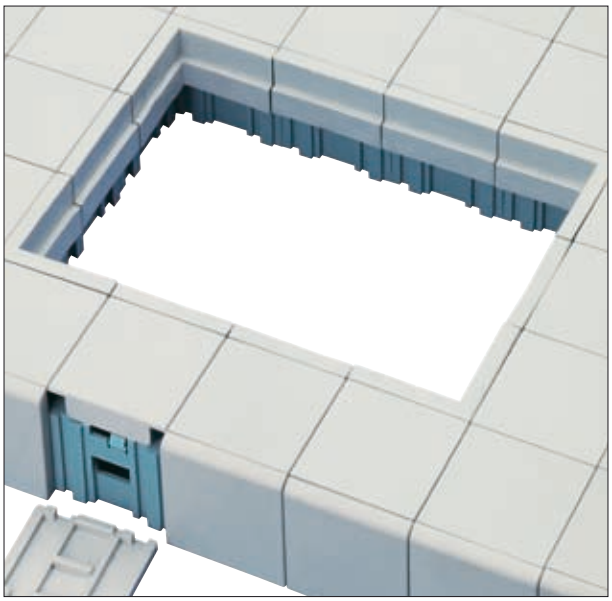

If the dimensions of a device do not correspond to a multiple of the board's module, we offer a range of adaptor elements which allow for construction of a special frame helping to adjust the device to the module. Controllers and switches are usually mounted by means of adaptor plates with front sections covered with the same surface patterns as the front sections of the boards. Details concerning installation methods are individually agreed with the customer.

FRONT PANEL COLOUR SCHEMES

NOTE:
The background colour of the board can be freely selected, however on account of proven ergonomic properties, the following colours are recommended:

grey

light green

beige

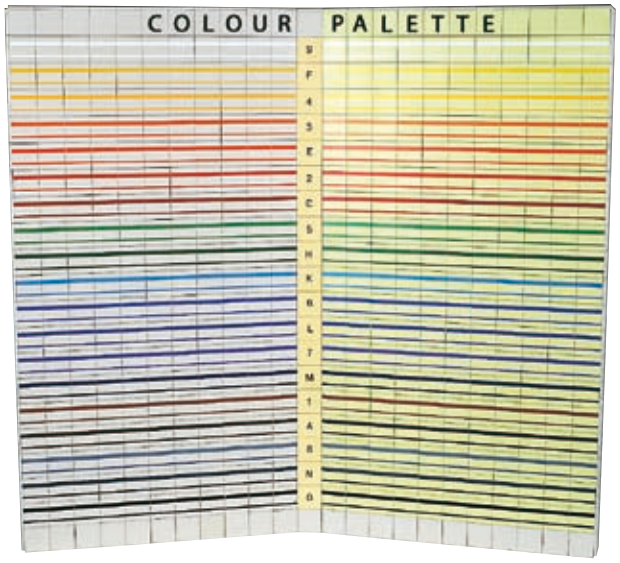

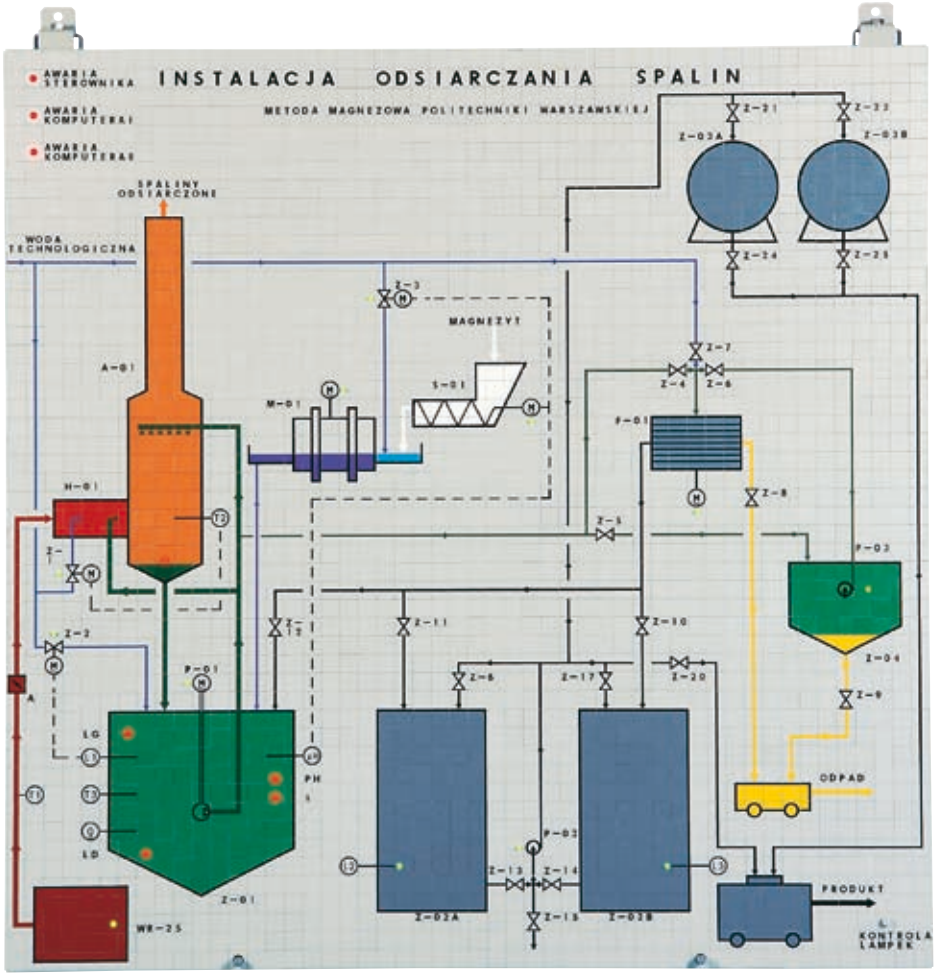

KSD SIGNAL BOXES

KSD-type signal boxes are designed for signalling status of the facility. They are mounted in matrix frames; caps of the signal boxes are flushed with the surface of the front panels of STM boards and control desks. Sets of signal boxes enclosed in aluminium frames can also be fixed in metal, wood-like or other plates (e.g. cabinets, desktops and top segments).

TECHNICAL DATA

- Control voltage ..... 18-24 V DC
- Power consumption ..... ca. 80 mA
- Colour of illumination ..... red, green, yellow
- Dimensions ..... 50.3 x 25.15 mm
- Outlets ..... rack and panel connector, terminal strip or other types, based on individual arrangements

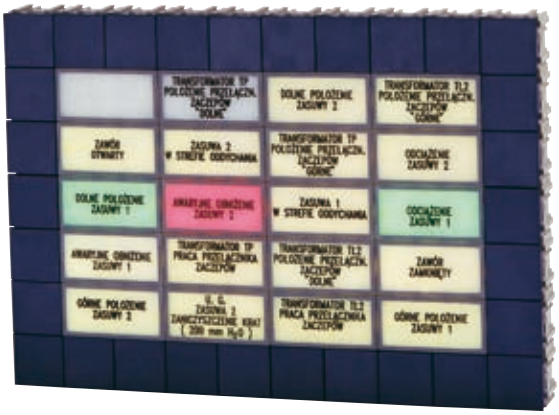

DESIGN

Each box incorporates three basic elements: a main body, a LED plate and a cap (non-transparent white). The surface of the cap has an inscription, sign or symbol plotted by screen printing or engraved. Another possibility is the use of transparent caps with inscriptions made on mat film or tracing paper placed underneath. Signal boxes are made as single units or in multiple sets in any configuration.

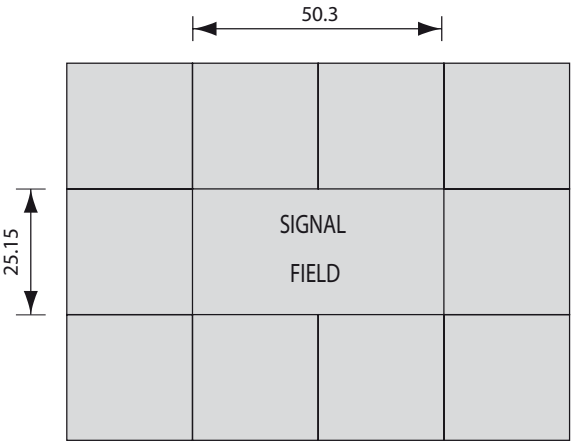

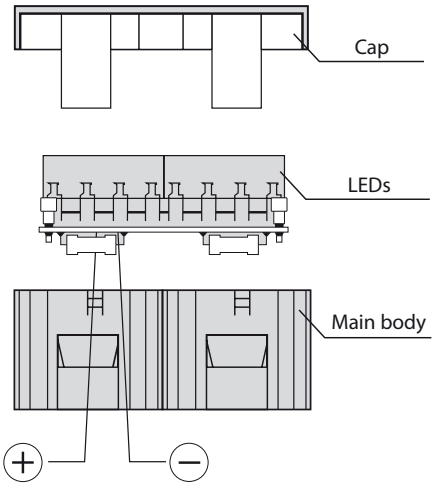

KCS-1 CENTRAL SIGNAL BOX

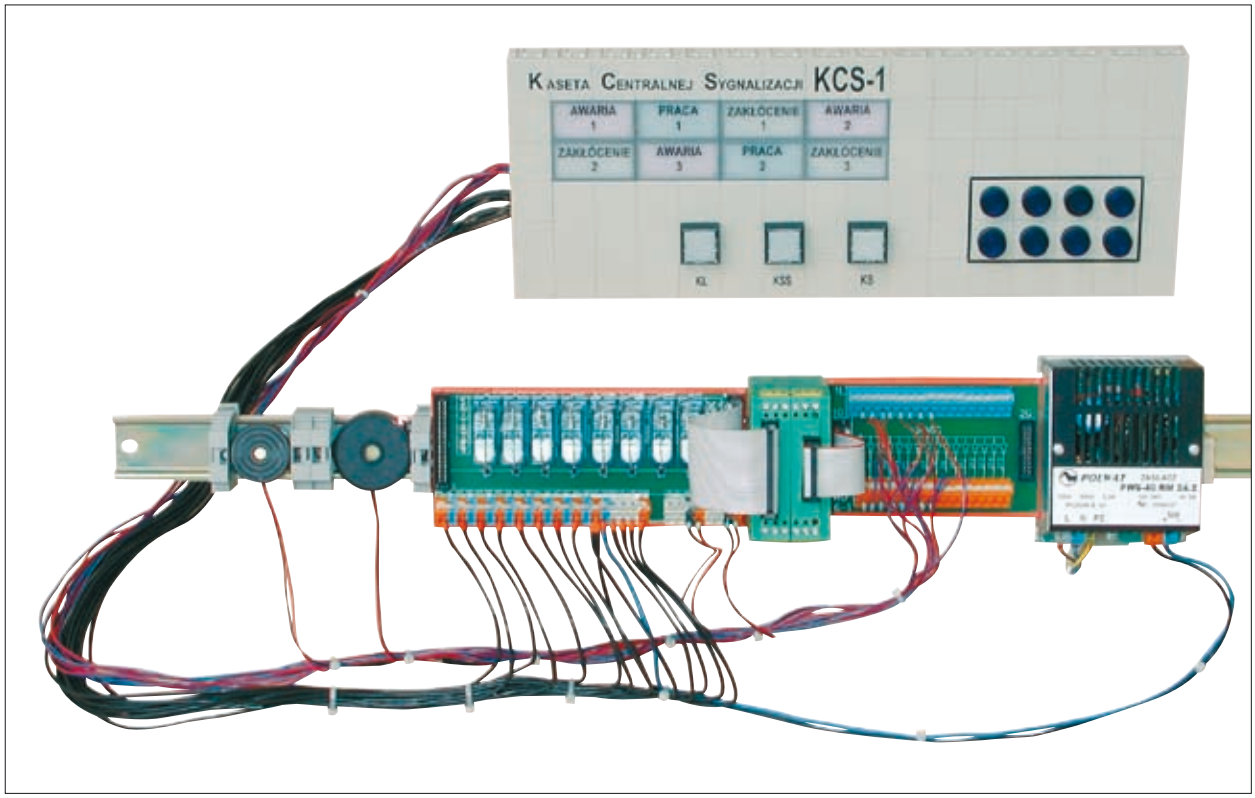

KCS-1 central signal box with accessories. Central module of the box, relaying strip, indirect strip, power unit and sound signalling buzzers are installed on the TS-35 rail; control buttons and KSD signal boxes (visual signalling) are extended to a sample element of the front panel of the matrix board.

KCS-1 central signal boxes are complete central audiovisual signalling systems designed for power industry applications or other industry sectors. The main task of central signal boxes it to inform the operating staff of an electric power station, a switching station or a production process control unit of the actuation of protective devices, breakdowns or irregularities in the operation of equipment and other undesirable events. Thanks to their modular structure, KCS-1 boxes enable operators to control any number of input channels.

The central module of each box is provided with in-built programming functions (individually for each channel):
- emergency function with memory and delay time,
- repeater function (signalling device),
- function of engine or pump operation control,
- NOT-operation function of the input status,
- buzzer activation and deactivation,
- protection against accidental information deletion,
- blackout detection,
- interference removal system.

Input signals include voltages fed to relay coils, monitoring the achievement of boundary values of technical parameters, the flow of operating media, engine or pu

Input signals:
- ***sound signalling*** **–** two piezoelectric buzzers placed directly on the TS-35 strip next to the central unit and NO-contacts of relays (with an option of connecting an additional warning horn or buzzer).
- ***visual signalling*** **–** KSD signal boxes designed for mounting in the front panel of the matrix board. Sets of KSD boxes, placed within an aluminium frame, can also be installed in 19" panels, in dispatch desktops or tops. As independent elements, they can be used in the so-called distributed signalling systems.

SAMPLE REALISED PROJECTS

National Power Dispatch Centre in Warsaw

A mimic board of a non-standard spherical shape, covering an area of ca. 80 m^2.

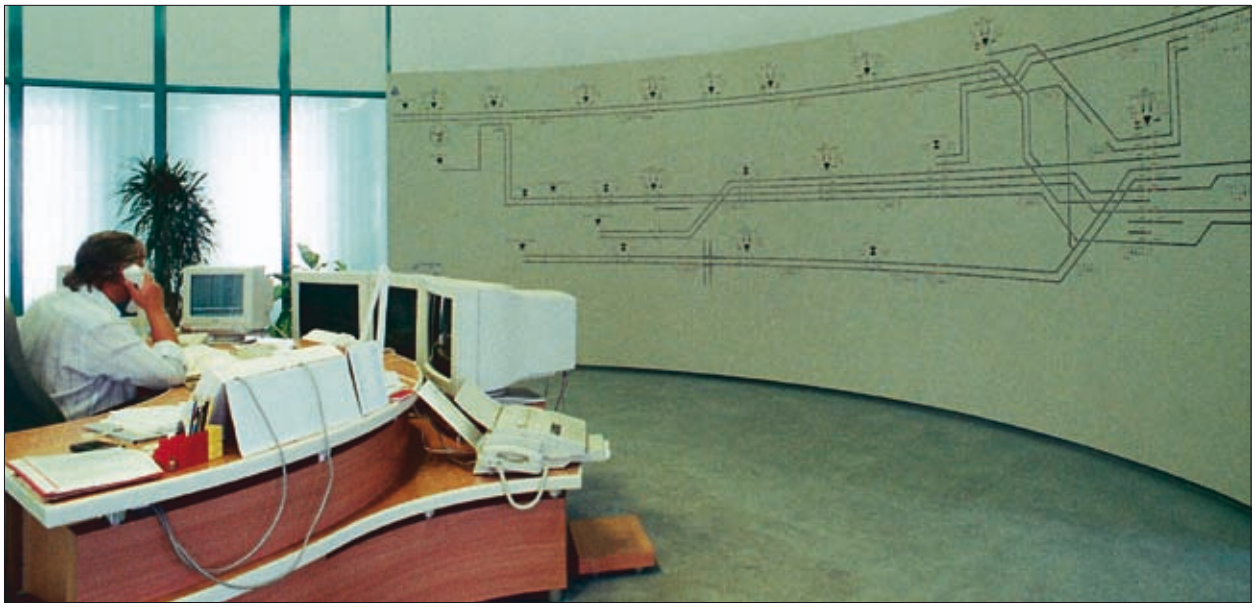

Central rail control station in Warsaw

SAMPLE REALISED PROJECTS

Sugar factory in Lublin

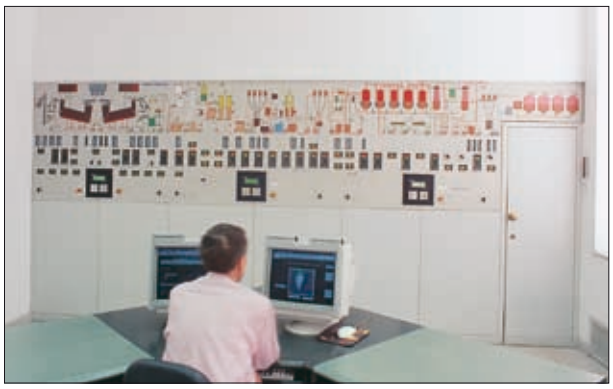

Regional Power Dispatch Facility in Katowice

SAMPLE REALISED PROJECTS

Niedzica S.A. hydroelectric power station - block control rooms in the power stations

Delivery included a mimic board together with dispatch and control desks.

SAMPLE REALISED PROJECTS

Heat and power generation plant in Białystok - block control room

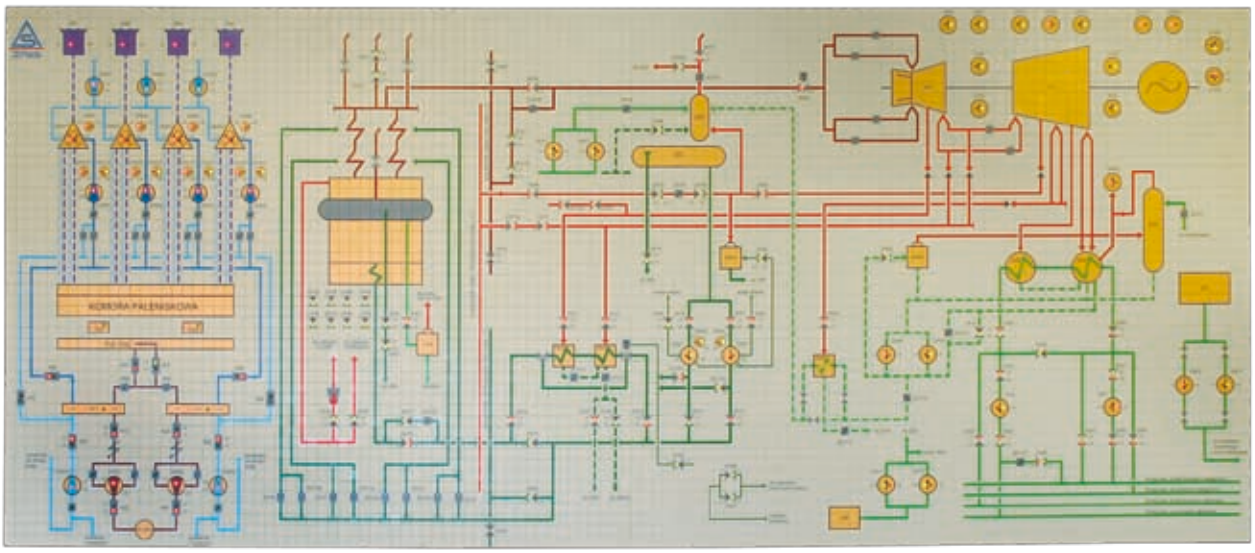

SAMPLE REALISED PROJECTS

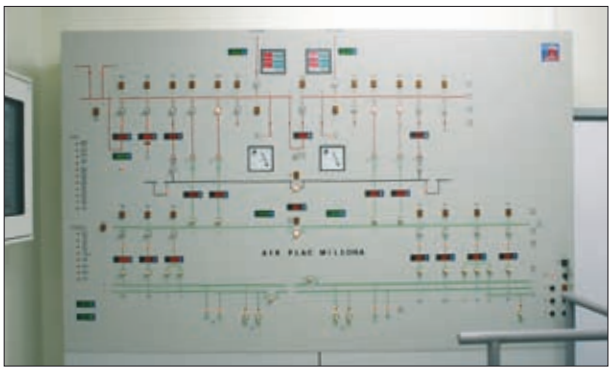

**Warsaw underground
at plac Wilsona (Wilson Square)
- dispatch board**

SAMPLE REALISED PROJECTS

Brown coal mine in Turów

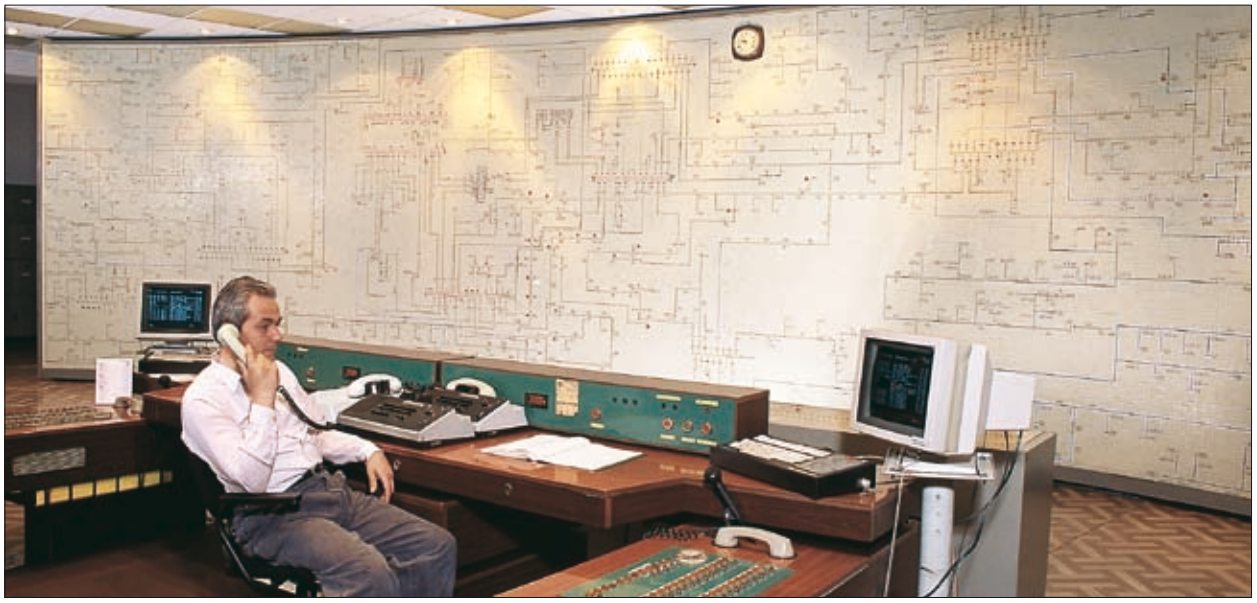

Dispatch section in the Power Distribution Company in Wałbrzych

SAMPLE REALISED PROJECTS

Electric power station in Kozienice – blocks 5 and 6

Supply of a full range of mimic boards and dispatch/control desks for block control rooms

SAMPLE REALISED PROJECTS

Electric power station in Kozienice – blocks 9 and 10

The scope of the delivery included a mimic board with dispatch and control desks.

SAMPLE REALISED PROJECTS

Regional Power Dispatch Facility in Ostrołęka

SAMPLE REALISED PROJECTS

Water supply and sanitation company in Łódź - dispatch room in the water production section

SAMPLE REALISED PROJECTS

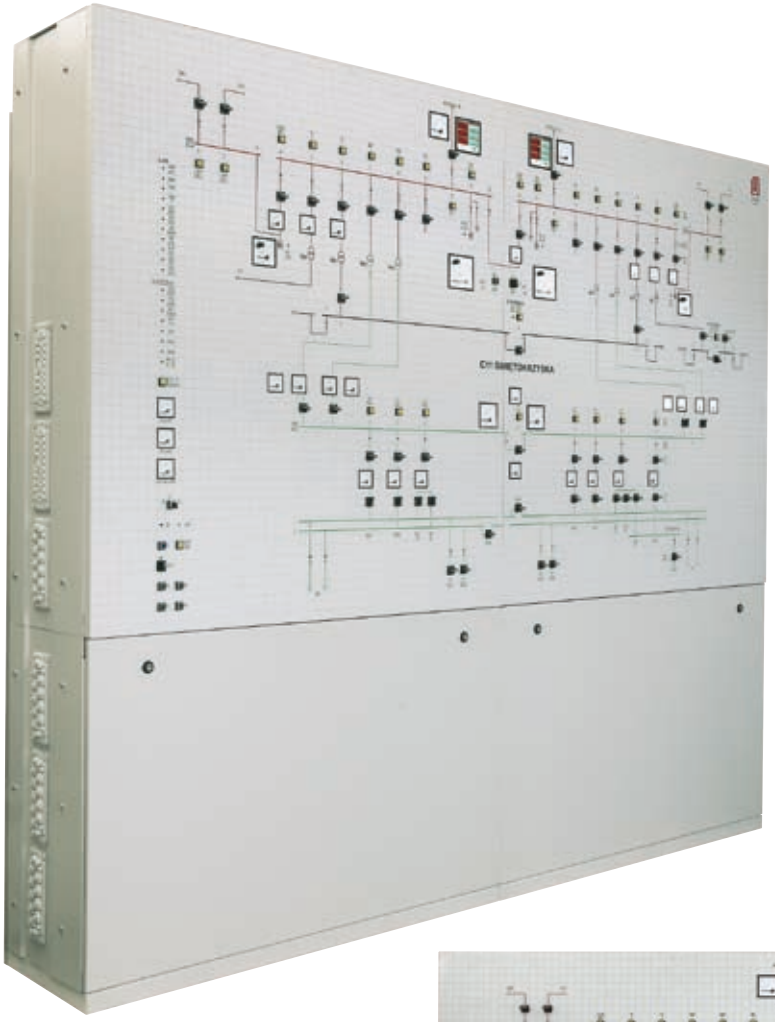

Warsaw underground at Świętokrzyska street - dispatch board

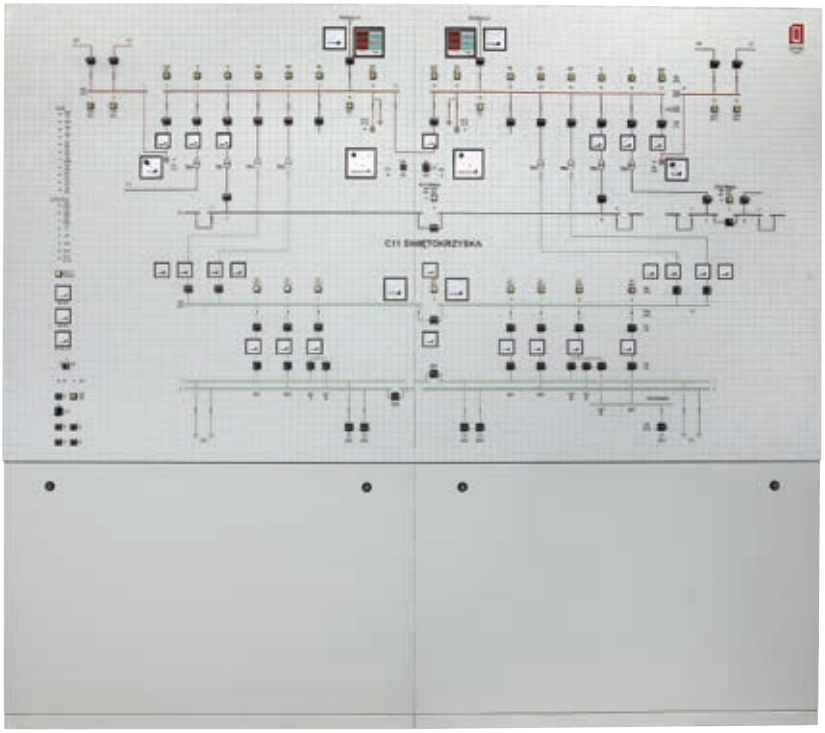

SAMPLE REALISED PROJECTS

MATRIX BOARDS IN ALUMINIUM FRAMES

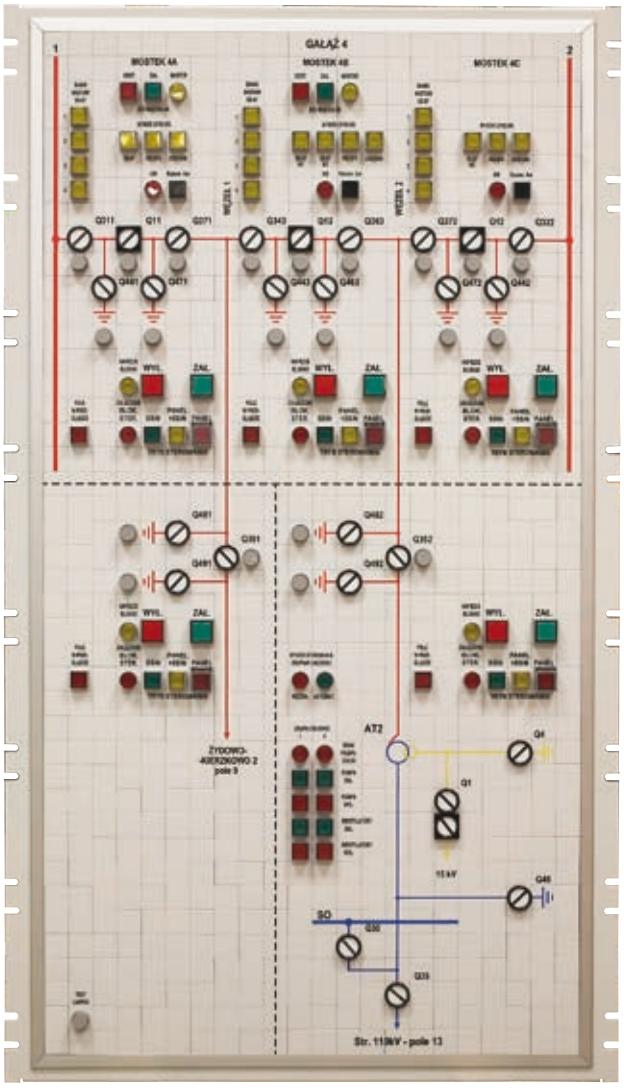

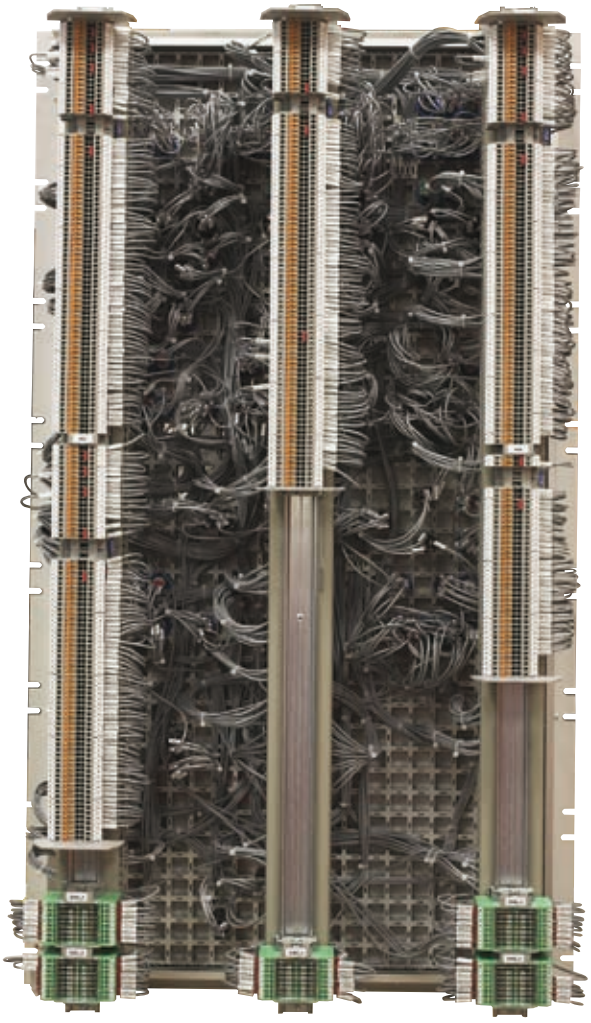

Matrix board in an aluminium frame set in a 19" masking panel for mounting in a control cabinet swing frame for a grid station. The board has a fragment of the electrical diagram with backlit buttons, electromagnetic indicators and LED modules, with connections to terminal strips.

SAMPLE REALISED PROJECTS

MATRIX BOARDS IN ALUMINIUM FRAMES

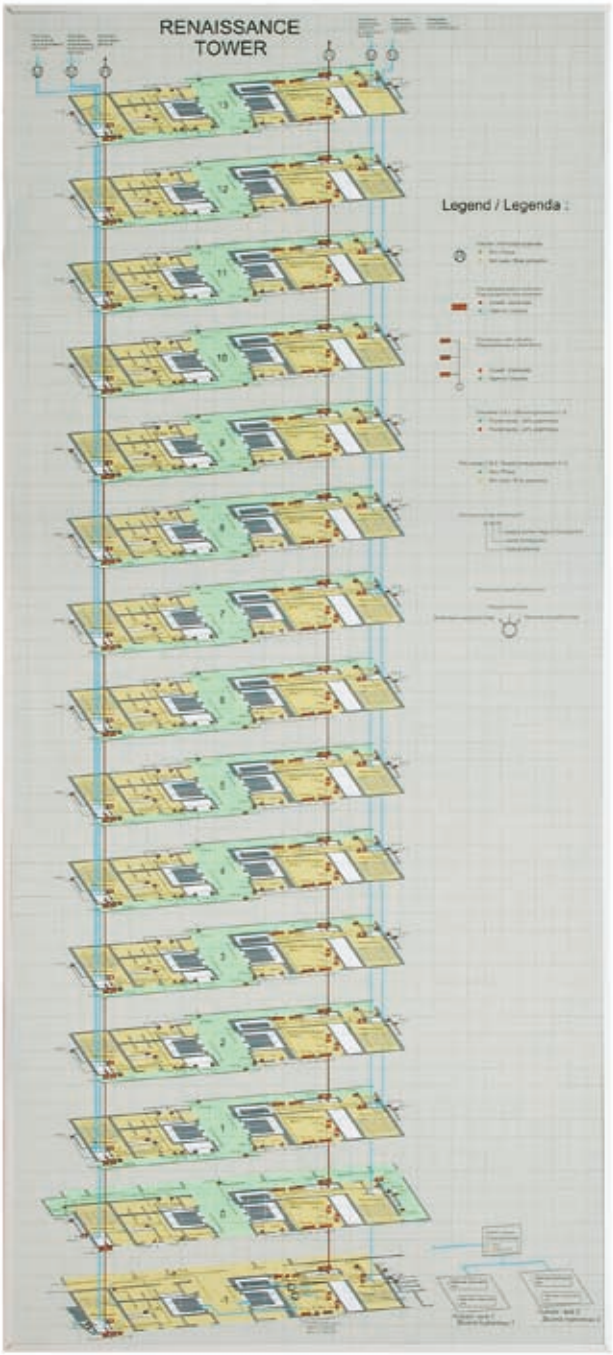

Board designed for monitoring the fire alarm system in Warsaw's Renaissance Tower

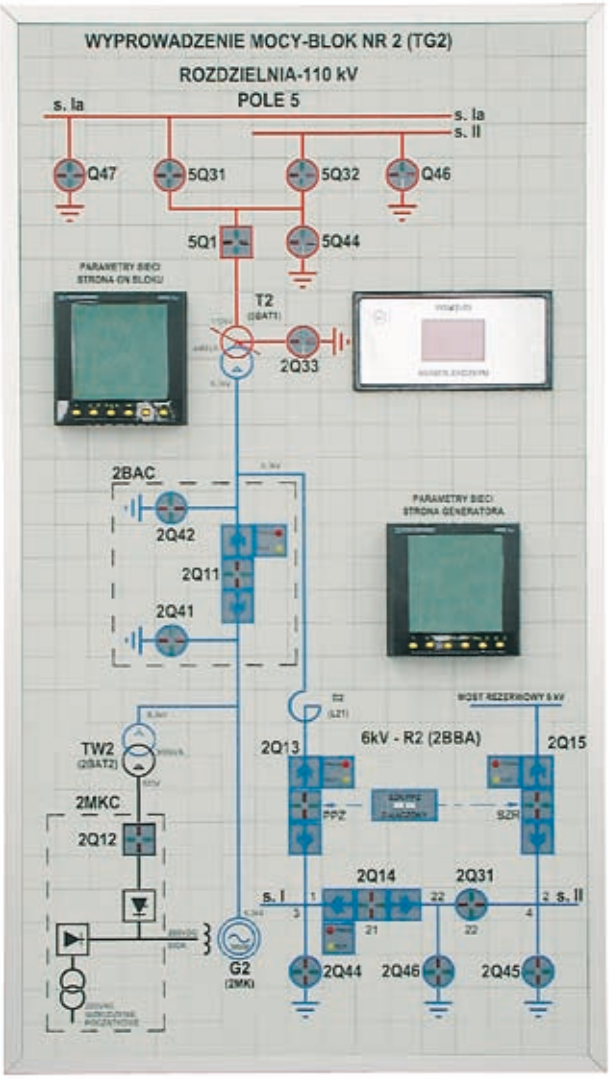

Board featuring a diagram of a power supply system

SAMPLE REALISED PROJECTS

MATRIX BOARDS IN ALUMINIUM FRAMES

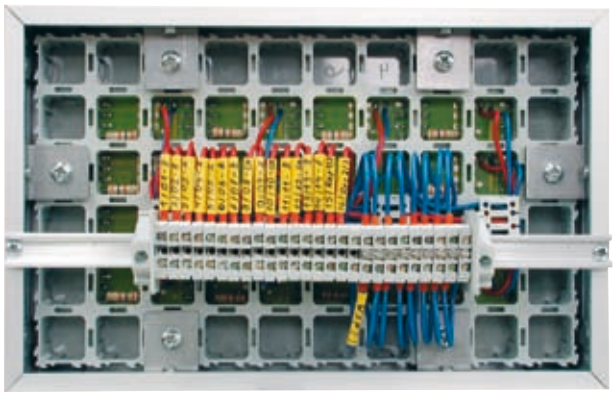

Signalling box designed for mounting in the control desk

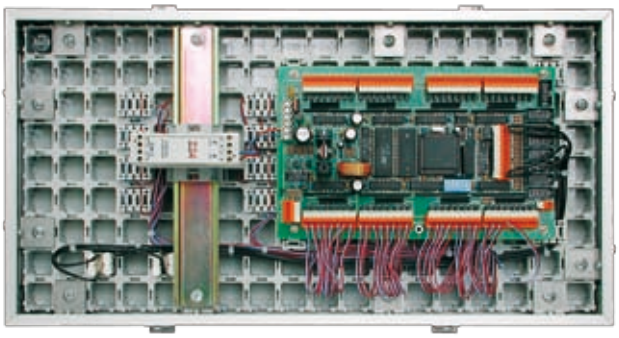

Monitoring of climatic conditions in a server room, based on the ZPAS Control Oversee system. The system records relevant data via LAN, communicates emergency conditions by short text messages and makes it possible to visualise the facility on a computer screen and mimic board.

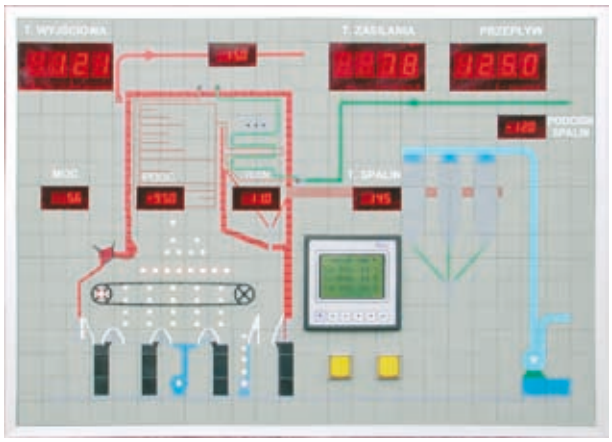

Control and monitoring of operations of an industrial facility

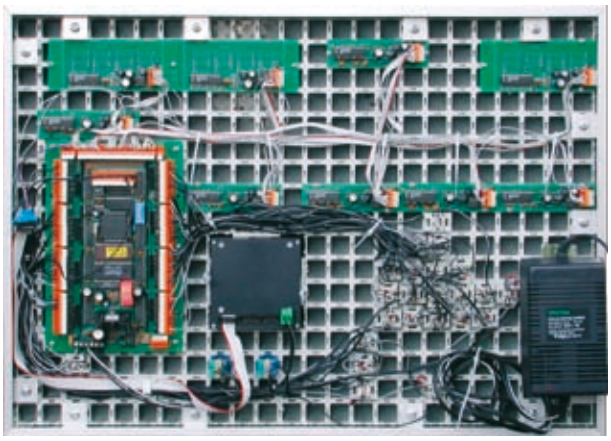

SAMPLE REALISED PROJECTS

MATRIX BOARDS IN ALUMINIUM FRAMES

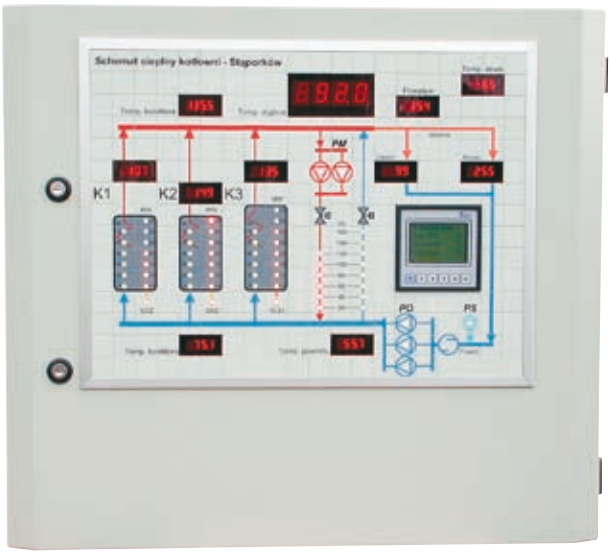

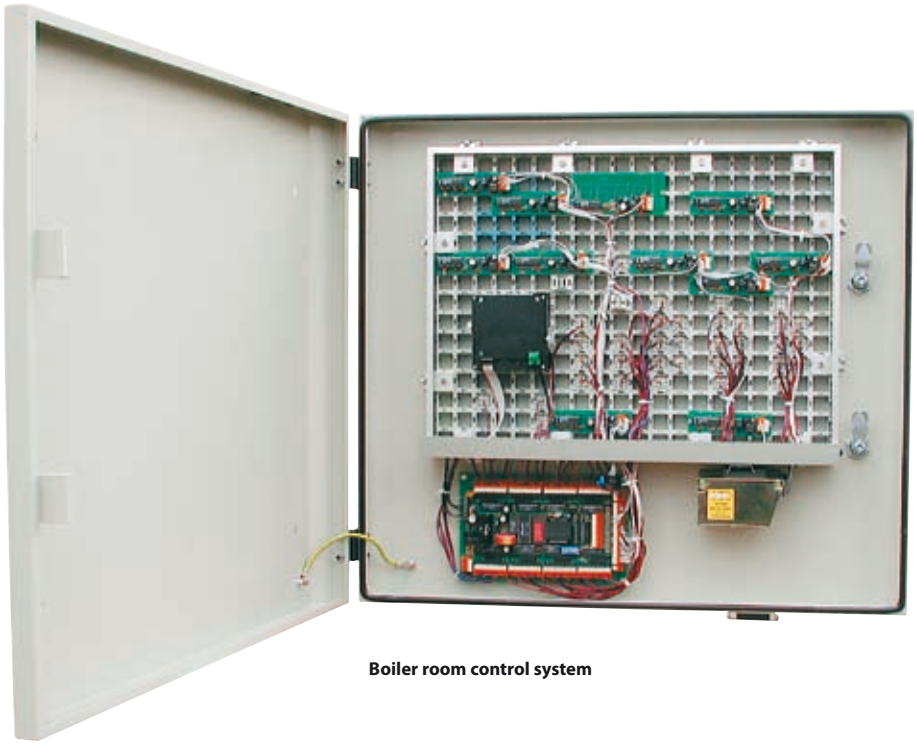

Boiler room control system

COMPREHENSIVE CONTROL ROOM PROJECTS

Bełchatów DIRE Control Room

In November 2011, on behalf of Energotest Sp. z o.o., ZPAS-NET Sp. z o.o. finished the project "Modernization of non-unit switchrooms Econtrol – comprehensive modernization of the DIRE control room" (gross value – PLN 2 127 214.00).

According to the order, ZPAS-NET was expected to deliver materials and equipment, carry out all required works and provide the agreed as-built and take-over documentation (test, trial and check reports). The deliveries and works included:

a) constructing and fitting out control room and employee welfare rooms:
   - rebuilding the walls and changing the location of the door,
   - delivery and installation of window and door joinery,
   - making new façade finish,
   - delivery and installation of Gustafs wall panels,
   - delivery and installation of suspended ceilings,
   - delivery and installation of furniture (office, kitchen, lounge),
   - delivery and installation of sanitary system.

b) Delivery, installation and commissioning of the access control system.
c) Delivery, installation and commissioning of aerial satellite and radio television.
d) Delivery, installation and commissioning of lighting fixtures, including DALI system.
e) Delivery, installation and commissioning of mechanical ventilation system and air conditioning.
f) Delivery and installation of matrix board.
g) Delivery and installation of dispatcher control panel, including electrical equipment and phone wiring system.
h) Delivery of wiring, and installation and commissioning of the entire system (power supply, IT network).

As part of the task, we also conducted all the necessary tests and examinations.

COMPREHENSIVE CONTROL ROOM PROJECTS

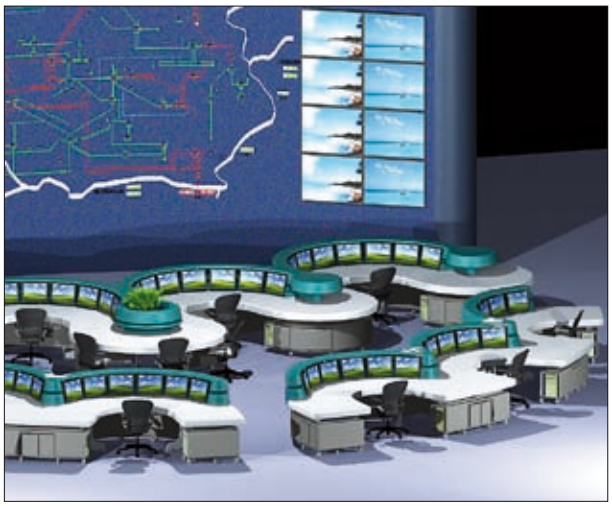

National Power Dispatch Centre (KDM)

In February 2009, ZPAS-NET completed the project consisting of the provision of equipment to dispatching centres at the main seat of PSE-OPERATOR in Konstancin-Jeziorna. The scope of works included design, architecture, interior layout and equipment, as well as technical infrastructure (structural wiring, process power supply, voice communication systems, IT network systems and visualisation systems). Works were carried out at three dispatching centres:

- KDM – National Power Dispatch Centre,
- CNOS – Control Centre for Network Facilities,
- CNOT – Control Centre for ITC Facilities.

Architectural solutions employed at KDM are also worth noting. The colour scheme adopted for the interiors, incorporating a dark blue dispatching panel (the dominating feature), uses sea green wall panels and malachite green Corian finishing elements of window sills and dispatching desks, to create a distinctive ambience of the facility, referring to the interiors of the Nautilus, a Captain Nemo's ship.

Technical solutions adopted for audio and video signal transmission, keyboard, mouse and USB are based on KVM extenders. Dispatching system workstations are accommodated in technology cabinets located in server rooms. Dispatching stations and terminals are interconnected using multi-mode optical fibers.
The solution helped achieve extra free space in dispatch desks and increase the comfort of work by reducing noise and temperature levels.

Visualisation: Krzysztof Dracz

COMPREHENSIVE CONTROL ROOM PROJECTS

Electric power station in Opole

In December 2010, ZPAS-NET completed a project comprising the supply and assembly of technical equipment and interior design elements for the central control building at PGE Elektrownia Opole. According to the order, ZPAS-NET was expected to deliver materials and equipment, carry out all required works and provide the agreed as-built and take-over documentation (test, trial and check reports). The deliveries and works included:

- fitting out and providing equipment for staff facilities,
- supplying the power generator, UPS and switchgear complete with cabling – uninterrupted power supply comprising two primary power supply circuits in the 19" industrial version and modular inverter (output power 90 kVA),
- supplying a video wall and large-size screens:
  - 10-screen DLP video wall (10 modules of 50" LED displays) with a total resolution of 7000x2100,
  - LCD monitors CD 46",
- delivering racks and server cabinets complete with cabling,
- delivering control desks, suport frames and furniture,
- delivering monitors, computers, printers and similar equipment:
  - LCD monitors 46",
  - LCD monitors 24",
  - LCD monitors 21",
  - video signal amplifier KVM,
- delivery of cables, assembly and commissioning of the equipment.

During the implementation of the main project, ZPAS-NET completed another order for Elektrownia Opole:
– "Communication system for blocks 1-4 supporting the transmission of signals from the blocks to the mimic system in the Central Control Room at PGE Elektrownia Opole S.A.".

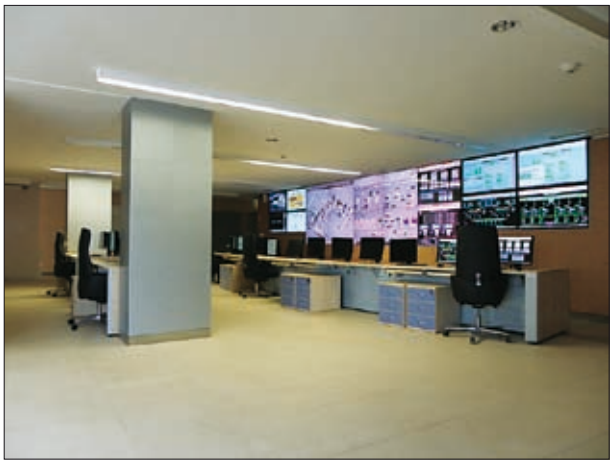

ZPAS
ZPAS
ZPAS

MULTIMEDIA KIOSKS

Info kiosk design 482
Special features of ZPAS multimedia kiosks 483
SIRIUS multimedia kiosk 484
TAURUS multimedia kiosk 486
VENUS multimedia kiosk 488
CETUS multimedia kiosk 490
SMART wall-hung multimedia kiosk 492
SMART wall-standing multimedia kiosk 494
SMART free-standing multimedia kiosk 496
Optional multimedia kiosks components 498
Examples of infokiosk applications 505

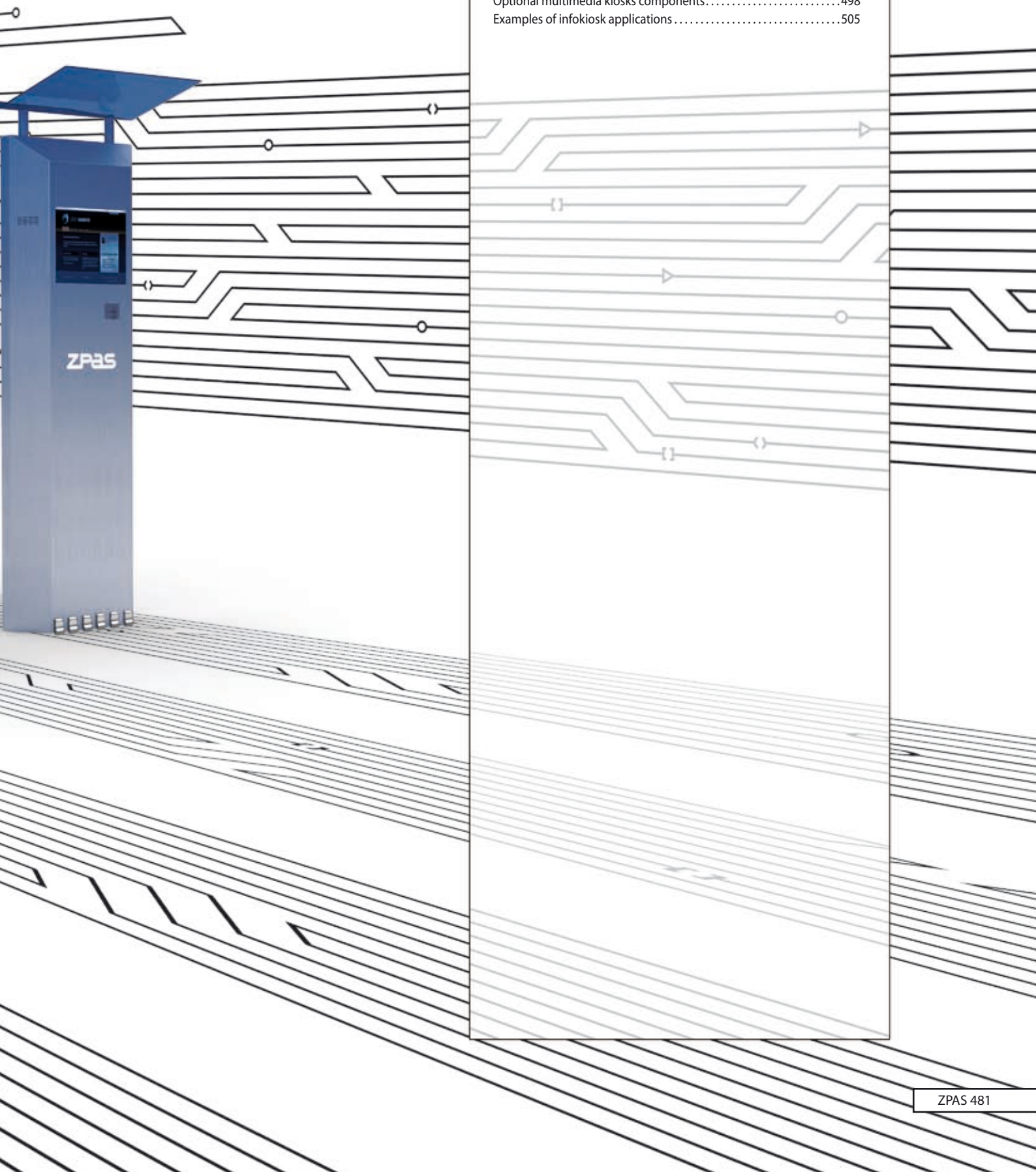

INFO KIOSK DESIGN

The multimedia kiosks are housed in enclosures which are highly resistant to damage. The inside part of the info kiosks is equipped with cooling and heating systems, as well as surge protection. The housing is made of suitable materials, fully protecting the devices and wiring inside against unauthorised access. Info kiosks designed for outside applications are provided with a high degree of leaktightness, so that no humid air or precipitation is able to penetrate inside the kiosk and damage the computer equipment. The special design of info kiosks makes it possible for people in wheelchairs to use them.

According to standards observed in products of this type, info kiosk are operated using a touch screen. All the hardware parameters of the computer and monitor are customised to meet customer's requirements. A standard version of the info kiosk is provided with a LCD panel, stereo speakers and a Nettop computer with excellent technical parameters.

Optionally, the kiosk can be operated using a special vandal-proof keyboard with an extra trackball option.

On the ZPAS Group website you can find multimedia kiosk configurator that allows you to configure the kiosks included in our standard offer.

Since ZPAS is a manufacturer, not a distributor, of info kiosks, it is possible to order equipment with any monitor size and non-standard enclosure types.

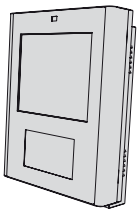

Sirius

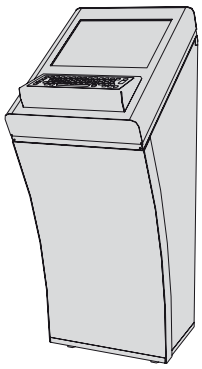

Taurus

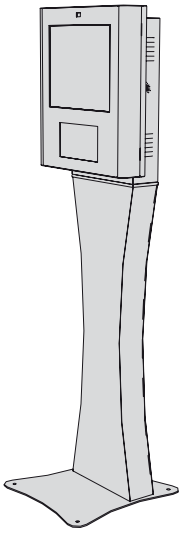

Venus

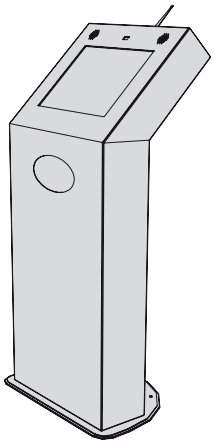

Cetus

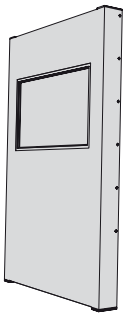

Smart wall-hung

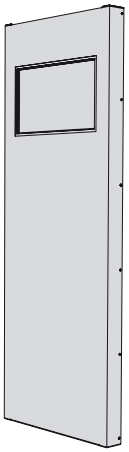

Smart wall-standing

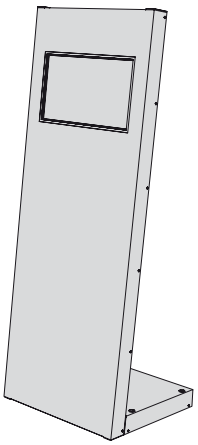

Smart free-standing

SPECIAL FEATURES OF ZPAS MULTIMEDIA KIOSKS

1. Stainless steel sheet housing, powder painted with a structural paint. Outdoor kiosks are painted with façade and UV-resistant paint.
2. The Infokiosk housing is covered by a 5-year warranty.
3. The electronic components are covered by a 2-year warranty.
4. Vandal-proof construction.
5. 19" vandal-proof SAW or IR overlay.
6. Rounded, safe edges.
7. Software that allows the user to define a start site that will be displayed upon the Infokiosk start-up. When idle, the software will automatically return to the start site. The start site can be saved on the local drive of the device and the user can select any website for this purpose.
8. Displaying websites, including the start site, that contain all state-of-the-art technologies used on the Internet, by means of the installed Internet browser or dedicated software. Should new technologies appear, the browser can be updated free of charge.
9. Defining settings that influence the security of the Infokiosk's operation (blocking cookies, movies and VB or Java scripts).
10. The devices include software that allows to update the content displayed within the Infokiosk.
11. The kiosk content can be remotely updated without interrupting its operation.
12. Defining Internet websites that can or cannot be accessed.
13. A selection of applications (*.exe files in Windows system) which the user can run by pressing a selected key.
14. Possibility of using a screen saver, also in the form of a slide or video show. After a given time of idle operation, an application will close all open windows, delete temporary Internet files, clear browser history and start displaying selected websites. Touching the screen, moving the mouse or pressing a key on the keyboard will stop the show and display the start site.
15. Hiding the menu bar.
16. Safe operation of the Infokiosk is ensured by:
    a) the possibility of setting the maximum resolution of the screen.
    b) the possibility of blocking critical Windows shortcuts, such as CTRL+ALT+DEL, Windows-Logo, ALT+TAB, Shift+F10, CTRL+ESC, ALT+ESC
    c) system monitoring in terms of memory capacity. If memory is too low, the system is restarted in order to ensure proper operation of the device.
    d) system monitoring (WatchDog software), which controls the operation of the management software and, if necessary, reinitializes it.
17. Infokiosk operation by means of a touch screen. Screen keyboard software available for Infokiosks without external keyboards.
18. An application that automatically closes windows working in the background or windows that are found idle.
19. Limited access to settings and configuration - password protection.
20. Automatic shut-down at a defined hour.
21. Camera support - optional.
22. Registering user activity and generating statistics.
23. Displaying homepage with the possibility of display settings modification (three modes available: static – bmp, animated – flash, full screen – a website displayed on the whole screen with the possibility of quick return e.g. by means of a home button at the bottom).

SIRIUS MULTIMEDIA KIOSKS

- Designed for use indoors. However, you can adapt the kiosk for outdoor use.
- In the wall-mounted housing with a high resistance to damage.
- The ideal solution in areas where there is no possibility of using a free-standing kiosk.
- Access to the inside part of the info kiosk through the openable front frame, closed with a lock.
- The inside part is equipped with cooling and heating systems, as well as surge protection.
- Operation via touch screen or keyboard with trackball.
- Wide range of accessories: Wi-Fi adapter, camera, UPS, barcode reader, etc.
- Operating system: Windows 7 Professional or Windows 7 Home Premium, other system available on customer's request.
- Kiosk colour tailored to the needs of the customer.
- Customised kiosk design in line with the needs of the customer.
- Dimensions (Height x Width x Depth):
  - without keyboard - 640 x 533 x 200 mm
  - with keyboard - 640 x 533 x 269 mm

SCOPE OF DELIVERY

- housing,
- nettop computer,
- 19" monitor,
- service mouse,
- service keyboard,
- 19" SAW touch overlay and/or vandal-proof keyboard with or without trackball,
- speakers,
- Kiosk Application for configuring a kiosk and monitoring its functioning to ensure proper operation,
- additional equipment on customer's request.

MULTIMEDIA KIOSKS SIRIUS

Version with keyboard

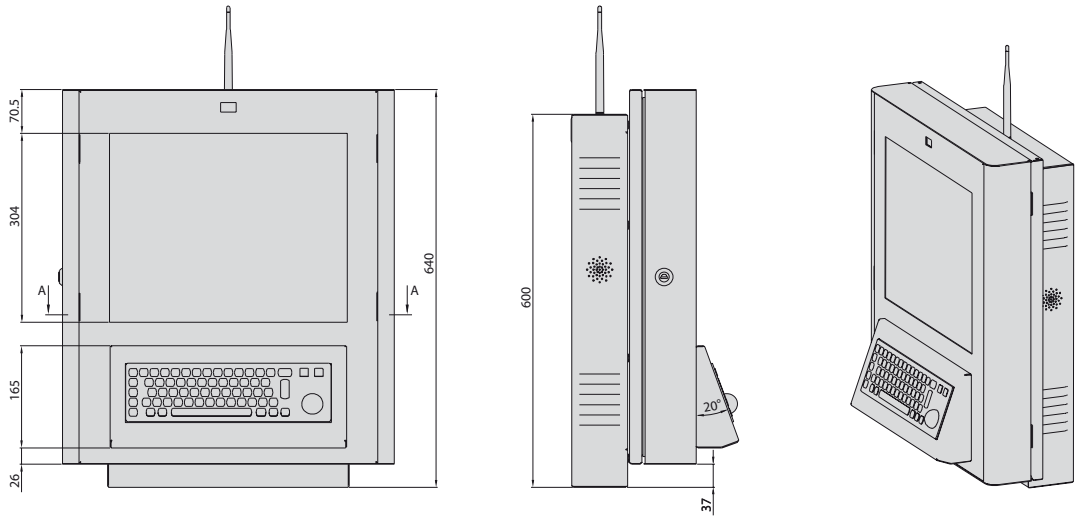

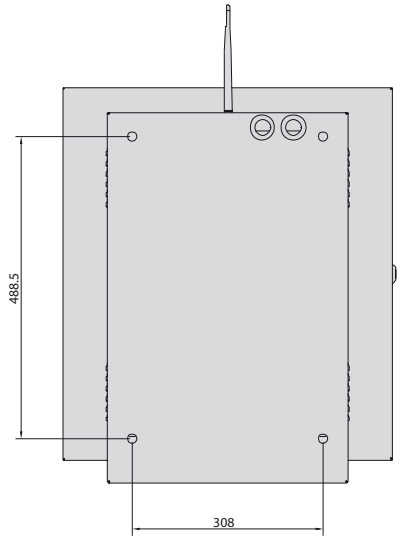

A-A section

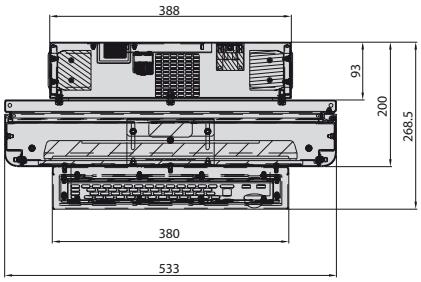

Version without keyboard

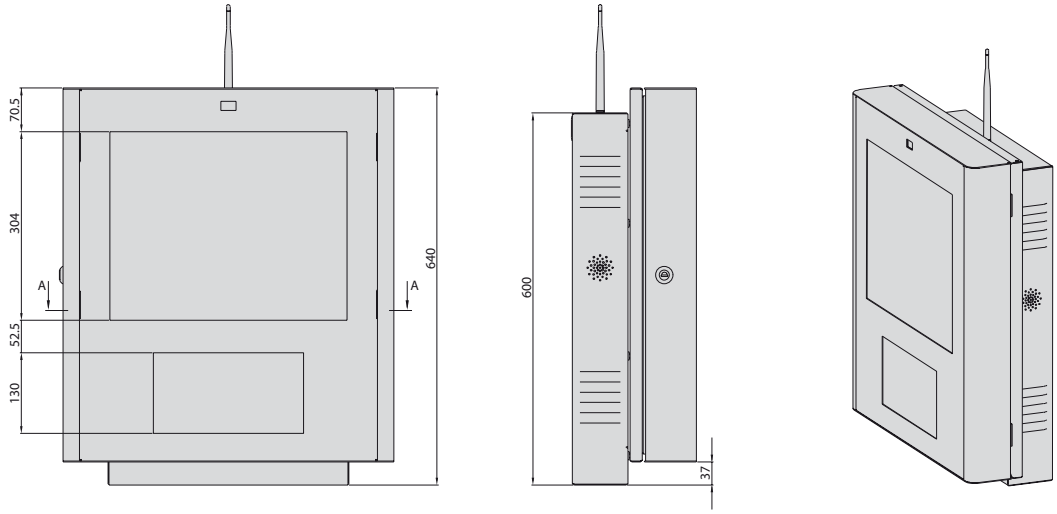

TAURUS MULTIMEDIA KIOSKS

- Designed for use indoors.
- In the free-standing housing with a high resistance to damage.
- Large removable panel closed with two locks with one-key system, on the kiosk rear wall, provides easy access to installed equipment.
- The inside part is equipped with cooling and heating systems, as well as surge protection.
- Operation via touch screen or keyboard with trackball.
- Wide range of accessories: Wi-Fi adapter, camera, UPS, barcode reader, etc.
- Operating system: Windows 7 Professional or Windows 7 Home Premium, other system available on customer's request.
- Kiosk colour tailored to the needs of the customer.
- Customised kiosk design in line with the needs of the customer.
- Dimensions (Height x Width): 1145 x 533 mm
- Monitor panel height: 603 mm

SCOPE OF DELIVERY

- housing,
- nettop computer,
- 19" monitor,
- service mouse,
- service keyboard,
- 19" SAW touch overlay and/or vandal-proof keyboard with or without trackball,
- speakers,
- Kiosk Application for configuring a kiosk and monitoring its functioning to ensure proper operation,
- additional equipment on customer's request.

TAURUS multimedia kiosk	
MULTIMEDIA KIOSKS	

MULTIMEDIA KIOSKS TAURUS

Version without keyboard

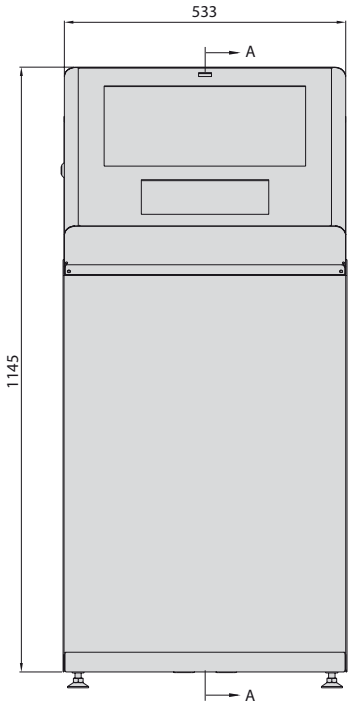

A-A section

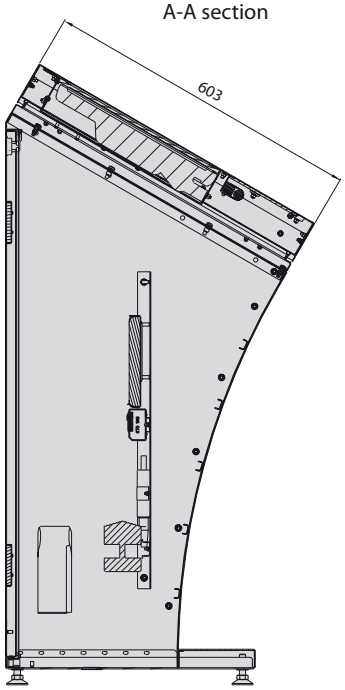

Top view

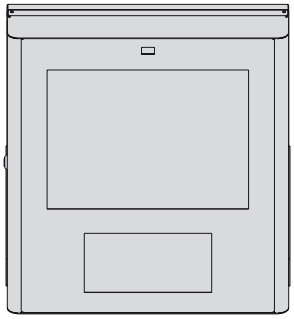

Version with keyboard

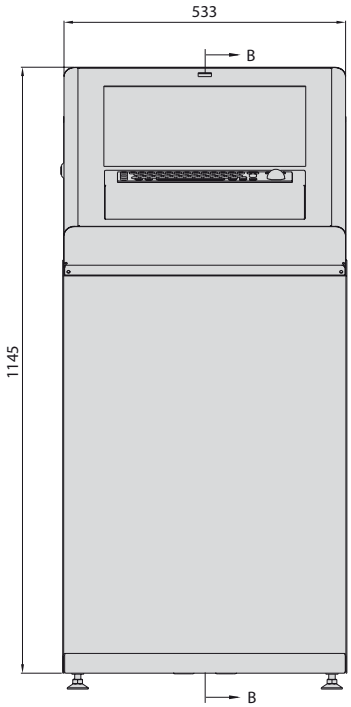

B-B section

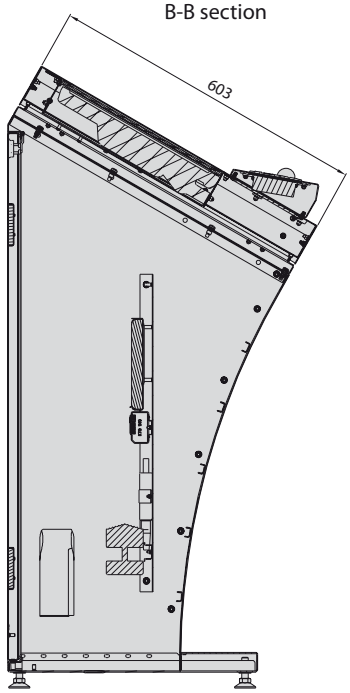

Top view

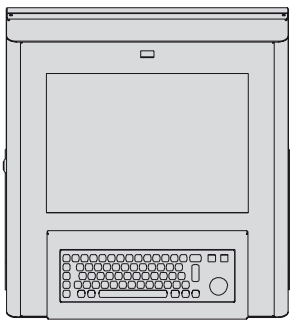

VENUS MULTIMEDIA KIOSKS

- Designed for use indoors. However, you can adapt the kiosk for outdoor use.
- Contained in a free-standing housing, screw mounted to the floor.
- Access to the inside part of the info kiosk through the openable front frame, closed with a lock.
- The inside part is equipped with cooling and heating systems, as well as surge protection.
- Operation via touch screen or keyboard with trackball.
- Wide range of accessories: Wi-Fi adapter, camera, UPS, barcode reader, etc.
- Operating system: Windows 7 Professional or Windows 7 Home Premium, other system available on customer's request.
- Kiosk colour tailored to the needs of the customer.
- Customised kiosk design in line with the needs of the customer.
- Kiosk dimensions (Height x Width x Depth):
  - without keyboard - 1889 x 533 x 199 mm
  - with keyboard - 1889 x 533 x 268 mm

SCOPE OF DELIVERY

- housing,
- nettop computer,
- 19" monitor,
- service mouse,
- service keyboard,
- 19" SAW touch overlay and/or vandal-proof keyboard with or without trackball,
- speakers,
- Kiosk Application for configuring a kiosk and monitoring its functioning to ensure proper operation,
- additional equipment on customer's request.

MULTIMEDIA KIOSKS VENUS

Version without keyboard

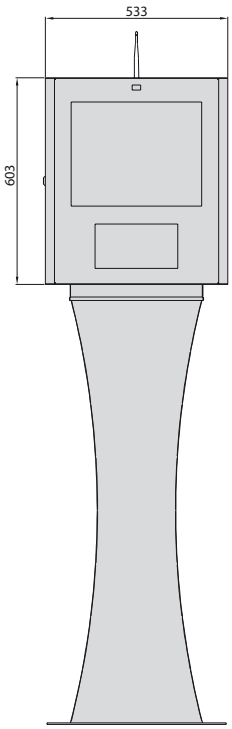

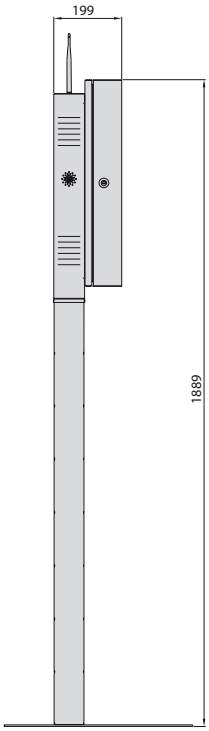

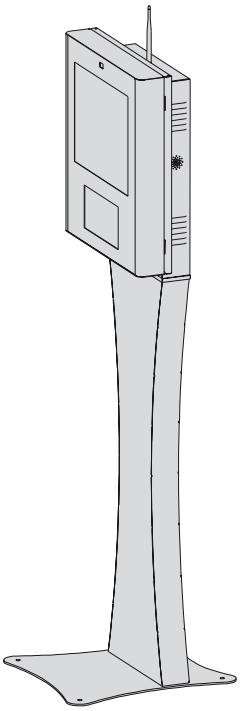

Top view

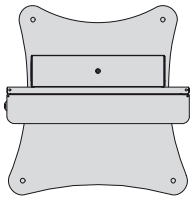

Version with keyboard

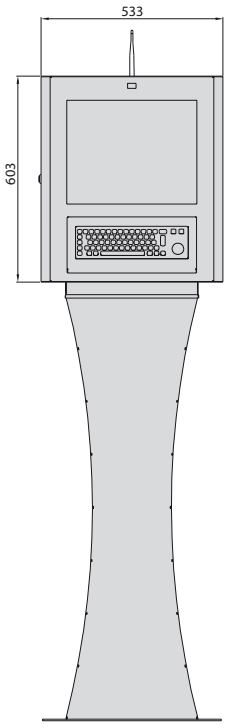

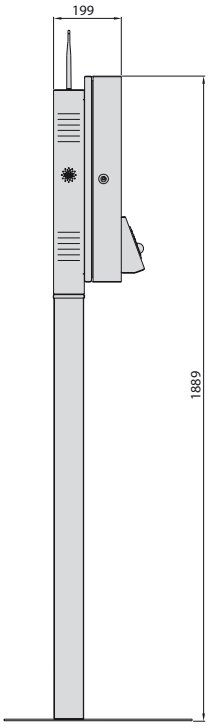

Top view

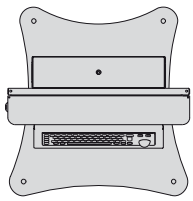

CETUS MULTIMEDIA KIOSKS

- Designed for use indoors. However, you can adapt the kiosk for outdoor use.
- In the free-standing housing with a high resistance to damage.
- The upper part of the Infokiosk is inclined at an angle of 45° relative to the lower part.
- Large removable panels closed with two locks with one-key system, on the kiosk rear wall, provides easy access to installed equipment.
- The inside part is equipped with cooling and heating systems, as well as surge protection.
- Operation via touch screen.
- Wide range of accessories: Wi-Fi adapter, camera, UPS, barcode reader, etc.
- Operating system: Windows 7 Professional or Windows 7 Home Premium, other system available on customer's request.
- Kiosk colour tailored to the needs of the customer.
- Customised kiosk design in line with the needs of the customer.
- Frame dimensions (Height x Width): 1424 x 550 mm
- Base width: 650 mm

"CETUS" Infokiosk with the cut out and illuminated logo

SCOPE OF DELIVERY

- housing,
- nettop computer,
- 19" monitor,
- service mouse,
- service keyboard,
- 19" SAW touch overlay,
- speakers,
- Kiosk Application for configuring a kiosk and monitoring its functioning to ensure proper operation,
- additional equipment on customer's request.

MULTIMEDIA KIOSKS CETUS

Front view

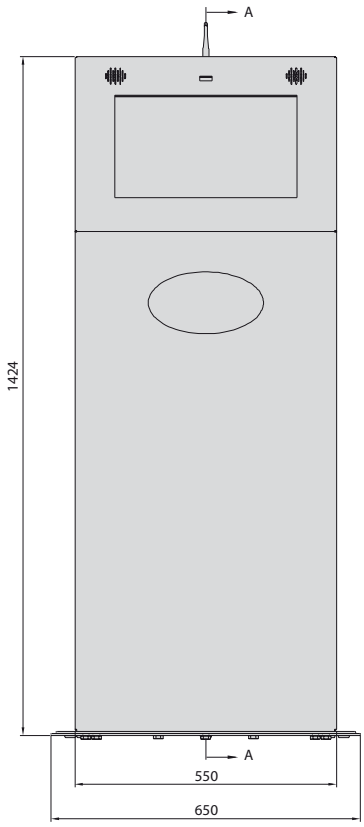

A-A section

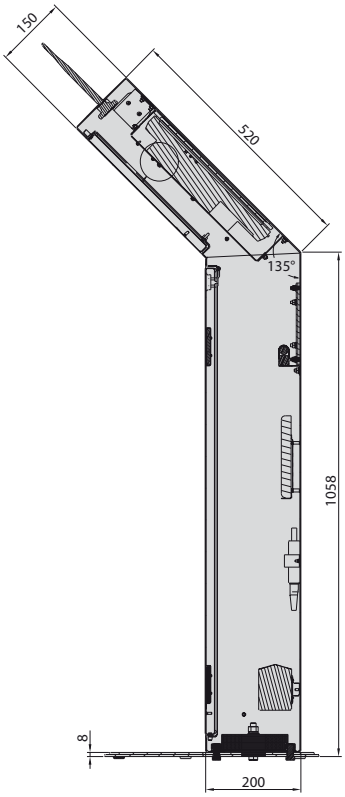

Rear view

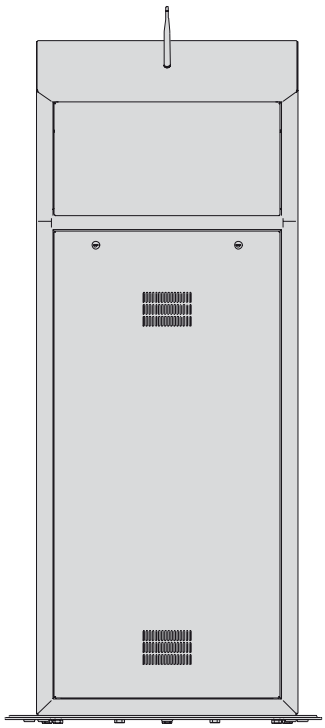

Rear view after removing the panels

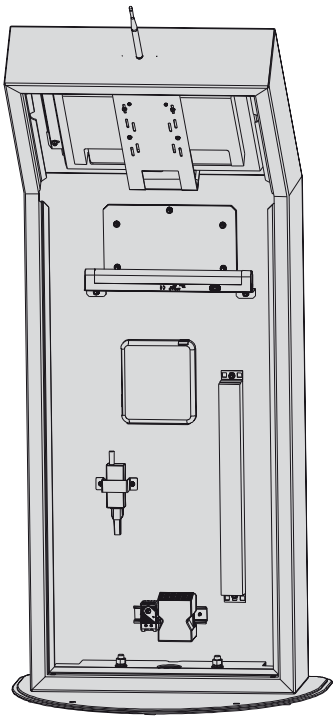

SMART WALL-HUNG MULTIMEDIA KIOSK

- Designed for indoor applications.
- Enclosure with high damage-resistance.
- It has a masking panel that can be painted or veneered according to customer needs.
- The inside part is equipped with cooling and heating systems, as well as surge protection.
- Operation via touch screen.
- Face of the infokiosk has a space for your ad or logo, and can also feature LED backlight.
- Wide range of accessories: Wi-Fi adapter, webcam, UPS, etc.
- Operating system: Windows 7 Professional, Windows 7 Home Premium or any other you choose.
- Masking panel made according to your needs.
- Infokiosk can be tailor-made if requested.
- Dimensions (Height x Width x Depth): 1040 x 654 x 81 mm

SCOPE OF DELIVERY

- enclosure,
- nettop computer,
- 21" monitor,
- service mouse,
- service keyboard,
- 21" touch overlay,
- speakers,
- infokiosk software,
- additional equipment at customer request.

WALL-HUNG MULTIMEDIA KIOSK SMART

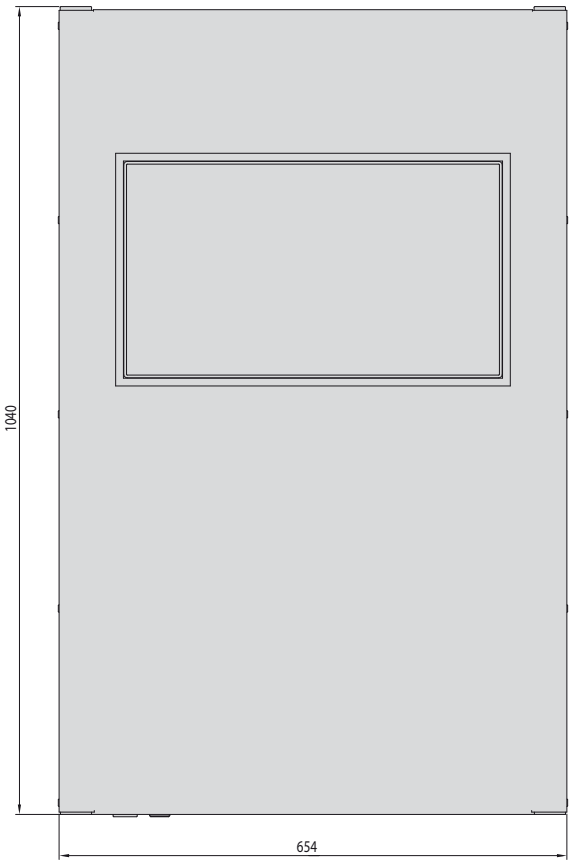

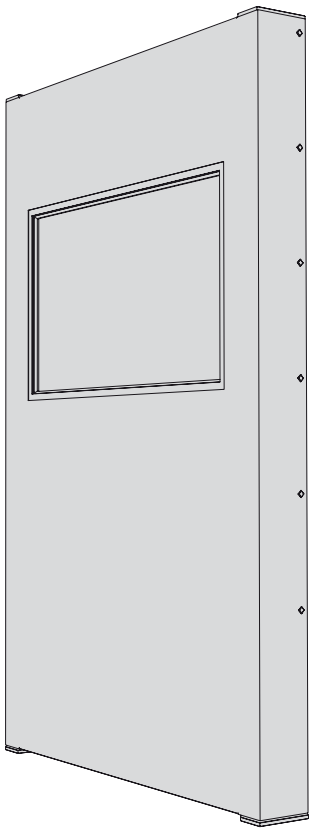

SMART WALL-STANDING MULTIMEDIA KIOSK

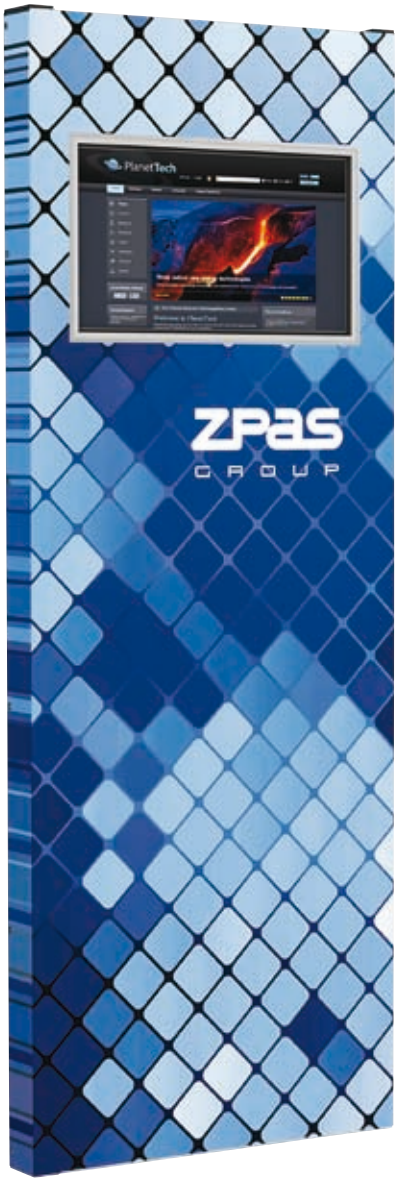

- Designed for indoor applications.
- Enclosure with high damage-resistance.
- It has a masking panel that can be painted or veneered according to customer needs.
- The inside part is equipped with cooling and heating systems, as well as surge protection.
- Operation via touch screen.
- Face of the infokiosk has a space for your ad or logo, and can also feature LED backlight.
- Wide range of accessories: Wi-Fi adapter, webcam, UPS, etc.
- Operating system: Windows 7 Professional, Windows 7 Home Premium or any other you choose.
- Masking panel made according to your needs.
- Infokiosk can be tailor-made if requested.
- Dimensions (Height x Width x Depth): 1740 x 654 x 81 mm

SCOPE OF DELIVERY

- enclosure,
- nettop computer,
- 21" monitor,
- service mouse,
- service keyboard,
- 21" touch overlay,
- speakers,
- infokiosk software,
- additional equipment at customer request.

WALL-STANDING MULTIMEDIA KIOSK SMART

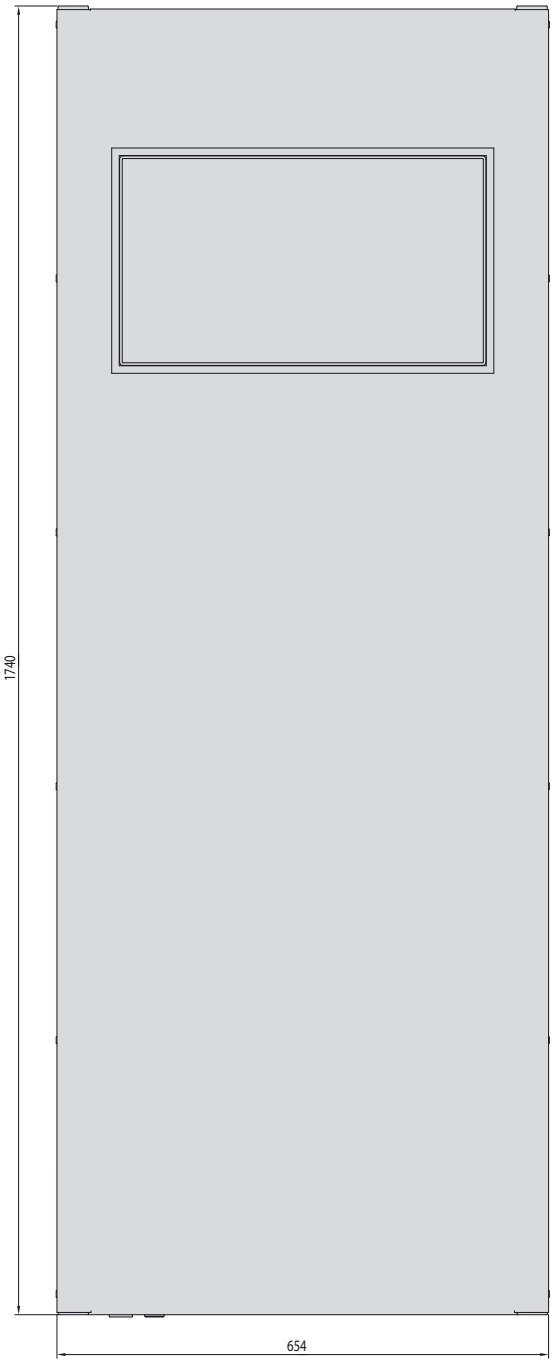

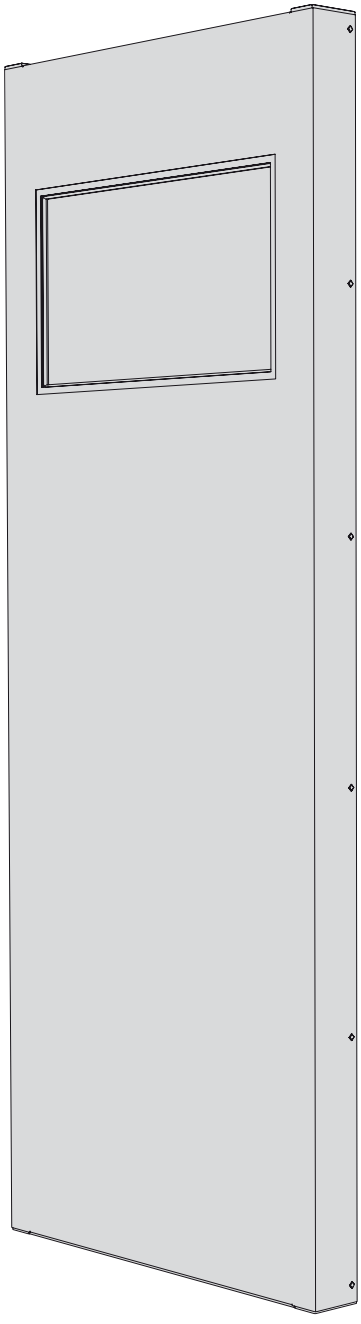

SMART FREE-STANDING MULTIMEDIA KIOSK

- Designed for indoor applications.
- Enclosure with high damage-resistance.
- It has a masking panel that can be painted or veneered according to customer needs.
- The inside part is equipped with cooling and heating systems, as well as surge protection.
- Operation via touch screen.
- Face of the infokiosk has a space for your ad or logo, and can also feature LED backlight.
- Wide range of accessories: Wi-Fi adapter, webcam, UPS, etc.
- The infokiosk front plate is inclined at an angle of 85° relative to the floor.
- Since it is possible to screw in a side module, you can have the infokiosk featured with devices that require more space, such as: barcode readers, card readers, bank note acceptors, coin validators, etc.
- Operating system: Windows 7 Professional, Windows 7 Home Premium or any other you choose.
- Masking panel made according to your needs.
- Infokiosk can be tailor-made if requested.
- Dimensions (Height x Width x Depth): 1733 x 654 x 544 mm

SCOPE OF DELIVERY

- enclosure,
- nettop computer,
- 21" monitor,
- service mouse,
- service keyboard,
- 21" touch overlay,
- speakers,
- infokiosk software,
- additional equipment at customer reques.

FREE-STANDING MULTIMEDIA KIOSK SMART

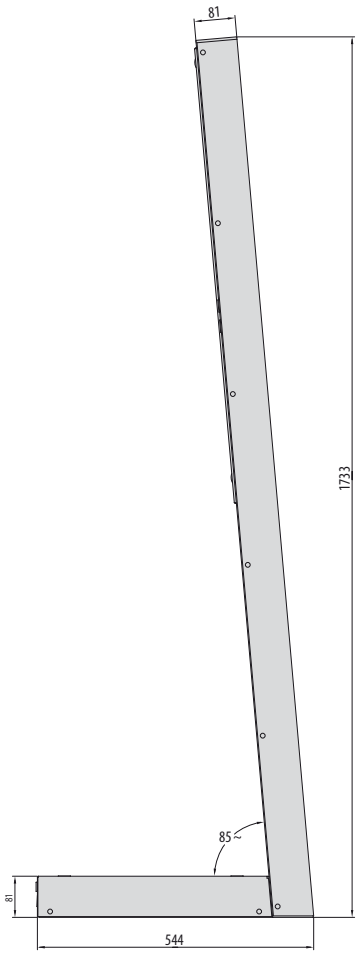

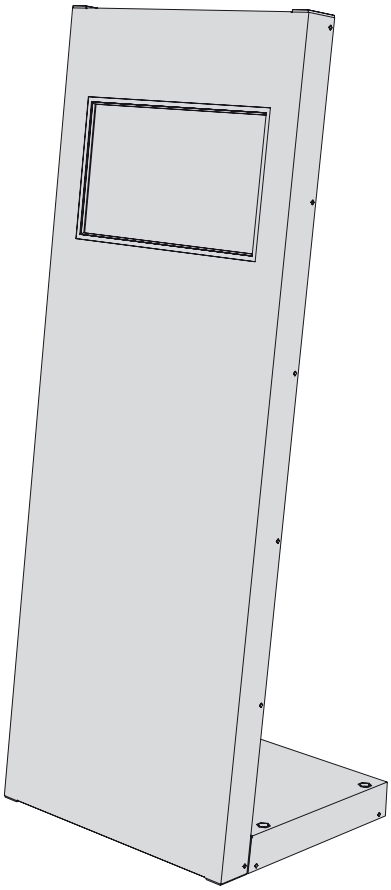

Kiosk with a side deposit module

Kiosk with a side module containing a barcode scanner, proximity payment module and a printer

OPTIONAL MULTIMEDIA KIOSKS COMPONENTS

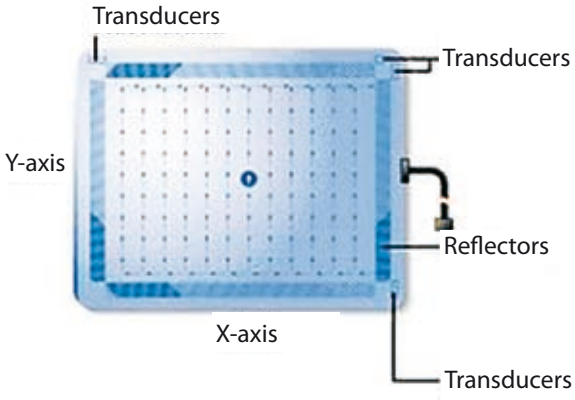

SAW touch overlay

The SAW touch overlay is made of an optical glass surface with piezoelectric transducers installed in its corners. The transducers are concealed under the monitor frame. As a result, the user has no access to them; consequently, it is impossible to damage them. As opposed to resistive and capacitive overlays, the SAW overlay has no additional layers of foil or metal than could be damaged. The SAW touch overlay is the dedicated solution, but not the only one. On special request, we can fit a kiosk with a different type of touch overlay.

PARAMETERS

- Standard size. . . . . 19" 4:3
- Resolution (interpolated) . . . . . 4096 x 4096
- 4 mm of tempered glass or 6 mm of optical glass
- Hardness of glass surfaces . . . . . 7 on the Mohs scale
- Endurance . . . . . > 70 mln touches
- Positioning accuracy . . . . . < 1%
- Touchpoint density. . . . . ≥ 100 000 touchpoints/cal2
- Light permeance . . . . . ≤ 90%
- Temperature rangeability. . . . . -20°C ~ +70°C
- Storing range . . . . . -40°C ~ 85°C
- Relative humidity range . . . . . 5% ~ 90%
- Electric range:
  - Voltage 5 V DC
  - Power from USB or PS/2 port, max. ripple power 200 mV rms
  - Full Duplex Interface USB 2.0 (Full Speed) Plug&Play
- Certificates. . . . . CE, FCC, RoHS

IR touch overlay

- Touch overlay for outdoor and indoor use.
- Multi-touch overlay (two points simultaneously)

PARAMETERS

- Size. . . . . 19"
- Type . . . . . INFRARED
- Supply . . . . . DC+5 V (max. 110 mA, standard 97 mA)
- Operating temperature. . . . . -40°C to 80°C
- Humidity. . . . . 90% at 40°C
- Interface . . . . . RS-232 and USB 2.0
- Resolution . . . . . 4096 x 4096
- Response time . . . . . <12 ms

OPTIONAL MULTIMEDIA KIOSKS COMPONENTS

Vandal-proof keyboard

IP 65 METAL KEYBOARD

- 65 keys
- Size of the front panel: 300 x 100 mm
- USB connection
- Key travel: 2.5 mm
- Certificates: CE, FCC, ROHS, IP65, IK07

IP 65 METAL KEYBOARD WITH TRACKBALL

- 65 keys, trackball
- Size of the front panel: 330 x 100 mm
- USB connection
- Key travel: 2.5 mm
- Two mouse keys
- Certificates: CE, FCC, ROHS, IP65, IK07

Note:
At customer's request, we can fit another keyboard with more keys, for instance, other type of pointing device (e.g. touchpad), etc.

Loudspeakers

2.0 speaker system with an elegant, modern design and high quality sound. Magnetic shielding ensures no interference with other equipment. Small size of the system allows you to fit it even in the small Infokiosk housing.

PARAMETERS

- Number of speakers.....2 pcs.
- Number of satellite speakers.....2 pcs.
- Woofer.....No
- Power of satellite speakers.....5 W
- Speaker frequency .....80 Hz–20 KHz
- External power unit .....No
- Nominal Impedance.....4 Ohm

OPTIONAL MULTIMEDIA KIOSKS COMPONENTS

Wireless Network Card

Wireless long-range USB network card allows you to connect your PC or laptop to a wireless network, giving access to a high-speed Internet connection. Owing to the AlignTM 1-stream technology based on the 802.11n standard, the adapter provides a better wireless signal as compared to devices using the 802.11g technology. Thanks to the pluggable antenna with 4 dBi gain, the strength and the range of data transmission is increased. The pluggable antenna with 4 dBi gain provides excellent work efficiency over long distances and in difficult conditions. The device receives a wireless signal going through even two building floors.

FUNCTIONS

- wireless data transmission speed up to 150 Mb/s,
- two operation modes: ad-hoc and infrastructure,
- Quick Secure Setup function enables the WPS decryption to secure data transmission,
- WEP 64/128 decryption, compatible with the 128-bit WPA standard, MCI, IV Expansion, Shared Key Authentication, compatible with the IEEE 802.1X standard.

SOFTWARE SPECIFICATION

- Standards IEEE 802.11n, IEEE 802.11g, IEEE 802.11b
- Frequency range: 2.4-2.4835 GHz
- Output Power: 20 dBm
- Modulation: OFDM/CCK/16-QAM/64-QAM

Webcam

Webcam with the CMOS 8.0 Mpix sensor with a maximum resolution of 1280 x 720 pixels. Connected with the USB 2.0 interface cable. 360° rotatable, 75° inclination angle. Saves images in JPEG format and video in WMV format.

PARAMETERS

- Video mode.....1280 x 720 pixels
- Interface.....USB 2.0
- Power supply ..... USB

Note:
At customer's request, we can fit a webcam with different parameters.

OPTIONAL MULTIMEDIA KIOSKS COMPONENTS

UPS

UPS is the device that provides continuous supply for electrical and electronic equipment.

PARAMETERS

- Product description:
  - Capacity: 650 VA or 390 W
  - Typical operation time: 25 min.
- Input characteristics:
  - Voltage range 192 ~ 263 V
  - Frequency: 50/60 Hz (+/- 3 Hz) auto-sensing
- Output characteristics:
  - Battery supply, output voltage: simulated sinewave – 230 V (+/- 5%)
  - Battery supply, output frequency: 50/60 Hz (+/- 1 Hz)
  - Typical switchover time: 4 ms
  - Overload protection: AC supply – fuse, Battery supply – internal current limiter
  - Protection against voltage spike: 405 J (L-N)
- Battery information:
  - Maintenance-free lead-acid battery, easy to replace 12 V, 7 AH x 1
  - Typical recharge time: 8 hours
- Sockets on the device:
  - 6 grounded sockets: 3 sockets providing surge protection and battery supply, and 3 sockets providing surge protection only
  - RJ11/RJ45 input/output surge protection
  - USB port for computer connection
- Control and management:
  - Ability to manually trigger the device auto-test
  - Automatic recharging
  - Automatic reboot
  - Schedule stop function
  - Power Panel ® Personal Edition computer software for management and controlling the behaviour of the system

Other accessories

At customer's request, we can equip multimedia kiosks with such components as barcode reader, magnetic card reader, printer, optical drive, bank note acceptors, coin validators, etc.

OPTIONAL MULTIMEDIA KIOSKS COMPONENTS

"KIOSK APPLICATION" configurator

An application that allows you to quickly configure the content of your Infokiosk and lets you activate mechanisms that control its operation. The software has been created as an administration panel that helps to fully configure all mechanisms of your Infokiosk.

WatchDog Application
This application controls the operating system and reinitialises the Infokiosk software if it gets blocked. The application is continuously running in the background and if any application starts to overload the operating system, it checks whether it works correctly. When not working properly, it reinitialises the Infokiosk.

Infokiosk statistics
The Infokiosk Statistics software has been created for the purpose of reporting the kiosk's activity. It allows to generate charts based on log files saved on the Infokiosk's workstation. It also includes the feature of automated report creation and can e-mail the reports to an e-mail address provided.

Virtual keyboard
The Virtual Keyboard is a tool used wherever a standard keyboard cannot be used. The main advantages of such a keyboard are impregnability and additional protection against the unauthorized use aimed at taking control of the computer.

Screen saver controller
The "Screen saver controller" is an application that checks periodically open windows and, if not attended by the user, clears unused content. When the Infokiosk is not in use, the Controller activates a slide show and reinitialises the selected software.

Start menu editor
The "Start Menu Editor" is an application that allows users to quickly create graphical menus. The procedure for creating your own menu could not be easier. What you do is you enter description of buttons and assign them to web addresses to which they should refer.

Side Menu
This is an application that activates the side menu and displays defined and configured keys, which the user can access at any time. It is very useful when defining an additional key for a home page or an email program.

OPTIONAL MULTIMEDIA KIOSKS COMPONENTS

"KIOSK APPLICATION" configurator

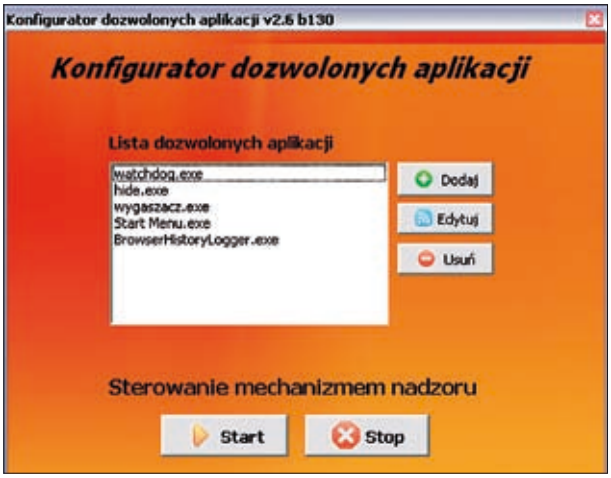

"Safe browser" software
Such software allows to browse website content by means of a properly secured web browser. Such a solution significantly decreases the risk of installing malicious software and virus infections in your Infokiosk.

Allowed applications configurator
Allowed Applications Configurator is an application that allows to define a list of allowed Windows applications. Consequently, applications not included in the list will not be run. The mechanism of the Configurator can be used as an additional means of protecting the computer against unwanted content that may be installed on the computer as a result of connecting the Infokiosk to the Internet. Using it, the Infokiosk administrator may increase their control over the processes taking place in it.

Screen Shots
This mechanism periodically makes and saves screen shots that show the Infokiosk operation. Most often, administrators use it as an additional tool to control the device operation. The user can define times when screen shots will be saved, as well as when screen shot archives will be deleted.

Restarts or shutdowns
The "Restarts or Shutdowns" option allows to automatically shut down, restart or start-up the computer at an hour defined by the user. This option, in connection with the possibility of automatic computer start-up, allows to quickly define a time schedule for the Infokiosk operation.

Web Filtering
Configurator for managing the list of websites, which can be displayed in the Infokiosk. Websites not entered by the administrator in the list will be blocked. This solution allows you to quickly secure a kiosk before opening unwanted content.

Infokiosk Maintenance System

This mechanism is activated automatically after Infokiosk start-up. It periodically checks the availability of the Infokiosk home page, and when no connection is detected it displays specially crafted web page with an appropriate message. Therefore, standard browser message that the user could interpret as a Infokiosku malfunction will never appear on screen.

OPTIONAL MULTIMEDIA KIOSKS COMPONENTS

Advanced Visualisation Software

This software allows the user to create an advanced start menu. As opposed to the option available in the Infokiosk Configurator, the user may freely arrange the keys and graphical elements. The application also allows to arrange the start menu as a tree structure. In order to create such a menu, the user needs to arrange the images, animations and other visualisation components, using the drag&drop method.

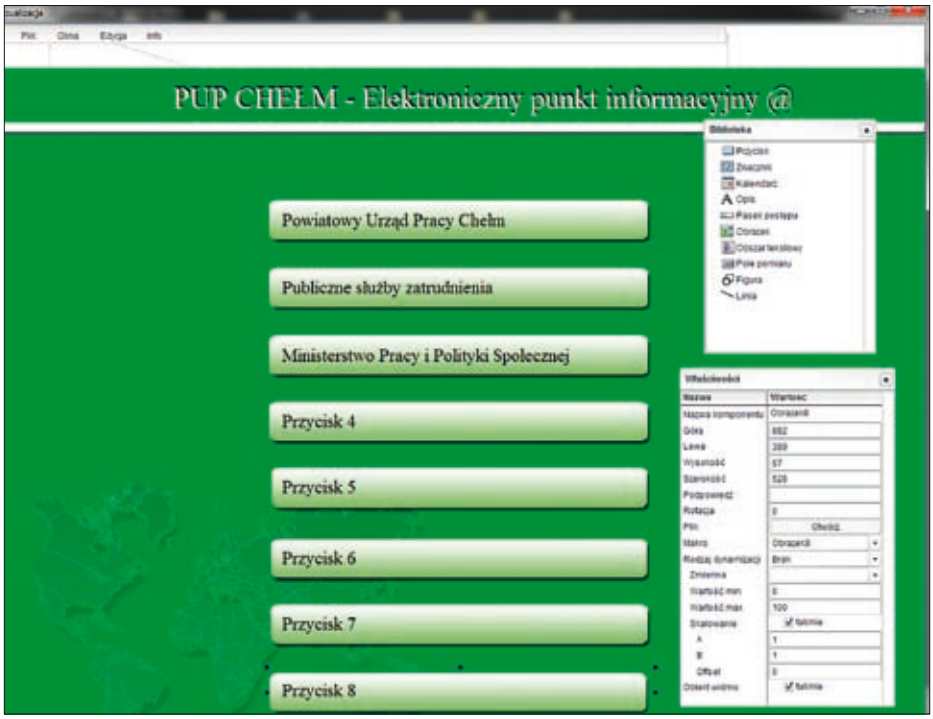

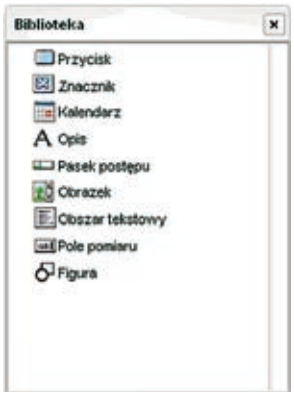

The basic components of the visualisation can be selected from the Library window. A very interesting feature of this software is the possibility of inserting swf vector animations into the visualisations, which will make your Infokiosk even more attractive and interesting to use.

EXAMPLES OF INFOKIOSK APPLICATIONS

Smart Infokiosk with veneered masking panel

Smart Infokiosk with perforated masking panel and backlit logo

Smart Infokiosk with stainless steel sheet masking panel

EXAMPLES OF INFOKIOSK APPLICATIONS

Standard version of the "Taurus" Infokiosk

Infokiosk for people with disabilities

Wall-mounted kiosk for Radmot company

Version for Castle Museum in Łańcut

EXAMPLES OF INFOKIOSK APPLICATIONS

Version for Bank Zachodni WBK

Outdoor infokiosk for Astronomical Observatory in Olsztyn

Version for the Polish Police

Infokiosk for The Scientific Information Centre and Academic Library in Katowice

Version for Michelin

CATALOGUE NUMBER INDEX

M

M1D-01-0004 122
M1D-01-0010 122
M1F-00-0106 128, 290, 328
M1H-01-0024 288
M1H-02-0028 288
M1N-02-0073 122
M1O-02-0011 263
M1O-02-0012 263
M1O-02-0103 263
M1O-02-0031 263
M1O-06-0644 337
M1S-00-0010 312
M1S-00-0011 312
M1S-00-0045 312
M1S-00-0055 312
M1S-00-0098 193
M1S-00-0099 193
M1S-00-0100 193
M1S-00-0101 193
M1S-00-0102 193
M1S-00-0103 193
M1S-00-0104 193
M1S-01-0026 312
M1S-01-0043 312
M1S-01-0066 312
M1S-01-0067 312
M1S-01-0070 312
M1S-01-0074 312
M1S-01-0104 312
M1S-01-0132 193
M1S-01-0133 193
M1S-03-0007 312
M1S-03-0010 312
M1S-03-0011 312
M1S-03-0023 312
M1S-03-0030 312
M1S-03-0031 312
M1T-02-0011 306
M1T-02-0012 306
M1T-02-0016 306
M1U-04-0304 165
M1U-04-0305 165
M1U-04-0627 165
M1U-04-0628 165
M1U-04-0640 165
M1U-08-0272 193
M1Z-00-0048 106, 292, 330

T

T1Z-00-0002 118
T1Z-00-0007 147
T1Z-01-0025 146
T1Z-01-0045 143
T1Z-01-0068 147
T-SO-700-001 253
T-SO-700-002 253
T-SO-700-003 253
T-SO-700-004 253
T-SO-700-005 253
T-SO-700-006 253
T-SO-700-007 253
T-SO-700-100 253
T-SO-700-101 253
T-SO-700-102 253
T-SO-700-300 253
T-SO-700-301 253
T-SO-700-302 253
T-SO-700-303 253
T-SO-700-304 253
T-SO-700-305 253
T-SO-700-400 253
T-SO-700-401 253
T-SO-700-402 253
T-SO-700-403 253
T-SO-700-404 253
T-SO-700-405 253
T-SO-700-406 253
T-SO-700-407 253
T-SO-700-408 253
T-SO-700-409 253
T-SO-700-500 253
T-SO-700-501 253
T-SO-700-502 253
T-SO-700-503 253
T-SO-700-504 253
T-SO-700-505 253
T-SO-700-506 253
T-SO-700-507 253
T-SO-700-508 253
T-SO-700-600 253
T-SO-700-601 253
T-SO-700-602 253
T-SO-700-603 253
T-SO-805-526 223
T-SO-805-536 223
T-SO-806-120 224
T-SO-806-130 224
T-SO-806-526 224
T-SO-806-527 224
T-SO-807-158 231
T-SO-828 228
T-SO-828-030 226
T-SO-828-050 225, 226
T-SO-828-111 225, 227
T-SO-828-112 225, 227, 228
T-SO-828-113 225, 227, 228
T-SO-828-411 227, 228
T-SO-828-412 227, 228
T-SO-828-413 227, 228
T-SO-828-711 225, 228
T-SO-828-712 225, 228
T-SO-828-713 225, 228
T-SO-828-811 225, 228
T-SO-828-812 225, 228
T-SO-828-813 225, 228
T-SO-831-918 229
T-SO-831-919 229
T-SO-832-924 230
T-SO-832-927 229
T-SO-834-911 230
T-SO-834-928 230
T-SO-834-932 230
T-SO-834-933 230
T-SO-839-515 226
T-SO-839-520 226
T-SO-841-160 239
T-SO-841-161 239
T-SO-841-162 239
T-SO-841-164 239
T-SO-841-167 239
T-SO-841-173 239
T-SO-841-663 240
T-SO-841-861 239
T-SO-842-461 239
T-SO-842-663 240
T-SO-844-162 239
T-SO-844-462 239
T-SO-845-472 240
T-SO-855-030 237
T-SO-855-130 237
T-SO-855-811 237
T-SO-870-500 232
T-SO-870-530 235
T-SO-870-540 233
T-SO-870-542 233
T-SO-870-562 233
T-SO-870-570 234
T-SO-870-571 234
T-SO-870-572 234
T-SO-881-302 235
T-SO-882-300 235
T-SO-883-210 236
T-SO-885-104 235
T-SO-891-317 269
T-SO-900-001 261
T-SO-900-004 261
T-SO-900-005 261
T-SO-900-025 222, 223
T-SO-900-035 222, 223
T-SO-900-048 223
T-SO-900-126 224
T-SO-900-128 269
T-SO-900-136 224
T-SO-900-605 235
T-SO-910-100 149
T-SO-910-102 148
T-SO-910-200 149
T-SO-910-202 148
T-SO-910-300 149
T-SO-910-302 148
T-SO-910-399 148, 151
T-SO-910-400 149, 150, 151
T-SO-910-401 149, 150, 151
T-SO-910-402 149
T-SO-910-403 149
T-SO-910-404 149
T-SO-910-405 149
T-SO-910-406 149
T-SO-910-407 149, 150
T-SO-910-408 150
T-SO-910-409 150
T-SO-910-410 150
T-SO-910-411 150
T-SO-910-412 148, 151
T-SO-910-413 150
T-SO-910-416 148
T-SO-910-422 150
T-SO-910-500 150
T-SO-910-700 150
T-SO-910-900 150
T-SO-910-910 150
T-SO-970-002 196
T-SO-970-003 196
T-SO-970-102 196
T-SO-970-103 196
T-SO-970-201 199
T-SO-970-202 199
T-SO-970-203 199
T-SO-970-204 199
T-SO-970-205 199
T-SO-970-206 199
T-SO-970-207 199
T-SO-970-301 202
T-SO-970-303 202
T-SO-970-305 202
T-SO-970-311 202
T-SO-970-313 202
T-SO-970-315 202
T-SO-970-330 203
T-SO-970-400 115, 202
T-SO-970-401 115, 202
T-SO-970-600 200
T-SO-970-601 201
T-SO-970-602 200

CATALOGUE NUMBER INDEX

T-SO-970-603 201
T-SO-970-604 200
T-SO-970-605 201
T-SO-970-606 200
T-SO-970-607 201
T-SO-970-608 201
T-SO-970-620 202
T-SO-970-622 203
T-SO-970-700 197
T-SO-970-701 197
T-SO-970-707 197
T-SO-970-708 197
T-SO-990-151 158
T-SO-990-154 158
T-SO-990-156 158

W

WN-0200-03-00-011 183
WN-0200-03-00-161 183
WN-0200-04-00-000 93
WN-0200-06-01-011 183
WN-0200-06-01-161 183
WN-0200-06-04-011 183
WN-0200-06-04-161 183
WN-0200-07-01-011 183
WN-0200-07-01-161 183
WN-0201-01-00-000/A 189, 311
WN-0201-02-00-000/A 189, 311
WN-0201-03-00-000/A 188
WN-0201-12-00-000 182
WN-0208-01-00-000 306
WN-0208-04-04-000 307
WN-0208-04-03-000 122
WN-0208-05-01-011 122
WN-0208-05-01-161 122
WN-0208-05-02-011 277, 307
WN-0208-05-03-011 277, 307
WN-0208-05-04-011 277, 307
WN-0208-05-05-011 277, 307
WN-0316-09-00 311
WN-1464-01-01-011 415
WN-1464-01-02-011 415
WN-1464-01-03-011 415
WN-1464-01-04-011 415
WN-1464-01-05-011 415
WN-1464-01-06-011 415
WN-1464-01-07-011 415
WN-1464-01-08-011 415
WN-1464-01-09-011 415
WN-1464-01-10-011 415
WN-1464-01-11-011 415
WN-1464-01-12-011 415
WN-1464-01-13-011 415
WN-1464-01-14-011 415
WN-1464-01-15-011 415
WN-1464-01-16-011 415
WN-1464-01-17-011 415
WN-1464-01-18-011 415
WN-1464-01-19-011 415
WN-1464-01-20-011 415
WN-1464-01-21-011 415
WN-1464-01-22-011 415
WN-1464-01-23-011 415
WN-1464-01-24-011 415
WN-1464-01-25-011 415
WN-1464-01-26-011 415
WN-1464-01-27-011 415
WN-1464-01-28-011 415
WN-1465-03-01-011 415
WN-1465-03-02-011 415
WN-1465-03-03-011 415
WN-1465-03-04-011 415
WN-1465-03-05-011 415
WN-1465-03-06-011 415
WN-1465-03-07-011 415
WN-1465-03-08-011 415
WN-1465-03-09-011 415
WN-1465-03-10-011 415
WN-1465-03-11-011 415
WN-1465-03-12-011 415
WN-1465-03-13-011 415
WN-1465-03-14-011 415
WN-1465-03-15-011 415
WN-1465-03-16-011 415
WN-1465-03-17-011 415
WN-1465-03-18-011 415
WN-1465-03-19-011 415
WN-1465-03-20-011 415
WN-1465-03-21-011 415
WN-1465-03-22-011 415
WN-1465-03-23-011 415
WN-1465-03-24-011 415
WN-1465-03-25-011 415
WN-1465-03-26-011 415
WN-1465-03-27-011 415
WN-1465-03-28-011 415
WNK-405-123 242
WNK-803-115 232
WNK-803-160 232
WNK-805-114 223
WNK-805-218 223
WNK-805-524 223
WNK-807-155 231
WNK-811-000 261
WNK- 811-100 261
WNK- 811-101 261
WNK-874-421 244
WNK-874-431 244
WNK-875-102 245
WNK-875-103 245
WNK-875-211 246
WNK-875-221 246
WNK-875-402 245
WNK-875-403 245
WNK-875-404 245
WNK-875-406 245
WNK-876-101 247
WNK-876-102 247
WNK-877-050 250
WNK-877-052 250
WNK-877-060 250
WNK-877-301 251
WNK-877-302 251
WNK-878-002 244
WNK-878-015 244
WNK-878-410 249
WNK-878-411 249
WNK-878-412 249
WNK-879-001 248
WNK-879-004 248
WNK-891-311 269
WNK-891-312 269
WNK-891-315 269
WNK-891-316 269
WNK-891-319 269
WZ-001C-10-45-011 277
WZ-001C-10-55-011 277
WZ-001C-12-45-011 277
WZ-001C-12-55-011 277
WZ-001C-12-75-011 277
WZ-001C-60-35-011 277
WZ-001C-60-45-011 277
WZ-001C-60-55-011 277
WZ-001C-60-75-011 277
WZ-001C-80-35-011 277
WZ-001C-80-45-011 277
WZ-001C-80-55-011 277
WZ-001C-80-75-011 277
WZ-002C-10-45-011 277
WZ-002C-10-55-011 277
WZ-002C-12-45-011 277
WZ-002C-12-55-011 277
WZ-002C-12-75-011 277
WZ-002C-60-35-011 277
WZ-002C-60-45-011 277
WZ-002C-60-55-011 277
WZ-002C-60-75-011 277
WZ-002C-80-35-011 277
WZ-002C-80-45-011 277
WZ-002C-80-55-011 277
WZ-002C-80-75-011 277
WZ-0008-01-01-011 97
WZ-0008-01-03-011 97
WZ-0008-01-04-011 97
WZ-0573-12-01-000 299
WZ-0573-12-02-000 299
WZ-0573-12-03-000 299
WZ-0573-12-04-000 299
WZ-0573-12-05-000 299
WZ-0573-12-06-000 299
WZ-0573-12-07-000 299
WZ-0573-12-08-000 299
WZ-0573-12-09-000 299
WZ-0573-12-10-000 299
WZ-0573-12-11-000 299
WZ-0573-12-12-000 299
WZ-0573-12-13-000 299
WZ-0573-12-14-000 299
WZ-0573-12-15-000 299
WZ-0573-12-16-000 299
WZ-0573-12-17-000 299
WZ-0573-12-18-000 299
WZ-0573-12-19-000 299
WZ-0573-12-20-000 299
WZ-0573-12-21-000 299
WZ-0573-12-22-000 299
WZ-0573-12-23-000 299
WZ-0573-12-24-000 299
WZ-0573-12-25-000 299
WZ-0573-52-21-000 316
WZ-0573-52-22-000 316
WZ-0573-52-23-000 316
WZ-0573-52-24-000 316
WZ-0573-52-30-000 316
WZ-0750-10-01-000 93
WZ-0750-10-02-000 93
WZ-0750-10-03-000 93
WZ-0750-10-04-000 93
WZ-0750-10-05-000 93
WZ-0750-10-06-000 93
WZ-0795-01-01-011 71
WZ-0795-01-02-011 71
WZ-0795-01-03-011 71
WZ-0795-01-04-011 71
WZ-0795-01-05-011 71
WZ-0795-01-06-011 71
WZ-0795-01-07-011 71
WZ-0795-01-08-011 71
WZ-0795-01-09-011 71
WZ-0795-01-10-011 71
WZ-0795-01-11-011 71
WZ-0795-01-12-011 71
WZ-0795-01-13-011 71
WZ-0795-01-14-011 71
WZ-0795-01-15-011 71

CATALOGUE NUMBER INDEX

WZ-0795-01-16-011	71	WZ-0950-01-46-011	348, 350	WZ-1718-59-07-161	126	WZ-1951-01-03-011	274, 277, 279
WZ-0795-01-17-011	71	WZ-0950-01-47-011	348, 350	WZ-1718-59-08-011	126	WZ-1951-01-05-011	274, 277, 279
WZ-0795-01-18-011	71	WZ-0950-01-48-011	348, 350	WZ-1718-59-08-161	126	WZ-1951-01-06-011	274, 277, 279
WZ-0795-01-19-011	71	WZ-0950-01-49-011	348, 350	WZ-1718-59-09-011	126	WZ-1951-01-07-011	274, 277, 279
WZ-0795-01-20-011	71	WZ-0950-01-50-011	348, 350	WZ-1718-59-09-161	126	WZ-1951-01-08-011	274, 277, 279
WZ-0795-01-21-011	71	WZ-0950-01-51-011	348, 350	WZ-1718-59-11-011	126	WZ-1951-01-09-011	274, 277, 279
WZ-0795-01-22-011	71	WZ-0950-01-52-011	348, 350	WZ-1718-59-11-161	126	WZ-1951-01-10-011	274, 277, 279
WZ-0795-01-23-011	71	WZ-0950-01-53-011	348, 350	WZ-1718-59-13-011	126	WZ-1951-01-11-011	274, 277, 279
WZ-0795-01-24-011	71	WZ-0950-01-54-011	348, 350	WZ-1718-59-13-161	126	WZ-1951-01-12-011	274, 277, 279
WZ-0950-01-01-011	348, 350	WZ-0950-01-55-011	348, 350	WZ-1718-59-15-011	126	WZ-1951-01-14-011	274, 277, 279
WZ-0950-01-02-011	348, 350	WZ-0950-01-56-011	348, 350	WZ-1718-59-15-161	126	WZ-1951-01-15-011	274, 277, 279
WZ-0950-01-03-011	348, 350	WZ-0950-01-57-011	348, 350	WZ-1718-59-16-011	126	WZ-1951-01-20-011	274, 277, 279
WZ-0950-01-04-011	348, 350	WZ-0950-01-58-011	348, 350	WZ-1718-59-16-161	126	WZ-1951-01-21-011	274, 277, 279
WZ-0950-01-05-011	348, 350	WZ-0950-01-59-011	348, 350	WZ-1718-82-05-011	110	WZ-1951-01-23-011	274, 277, 279
WZ-0950-01-06-011	348, 350	WZ-0950-01-60-011	348, 350	WZ-1718-82-06-011	110	WZ-1951-01-24-011	274, 277, 279
WZ-0950-01-07-011	348, 350	WZ-1718-07-01-011	125	WZ-1718-97-01-000	117	WZ-1951-01-49-011	274, 277, 279
WZ-0950-01-08-011	348, 350	WZ-1718-07-01-161	125	WZ-1718-97-02-000	117, 297	WZ-1951-01-50-011	274, 277, 279
WZ-0950-01-09-011	348, 350	WZ-1718-07-02-011	125	WZ-1718-97-03-000	117, 297	WZ-1951-07-05-011	277, 289
WZ-0950-01-10-011	348, 350	WZ-1718-07-02-161	125	WZ-1718-97-04-000	117, 297	WZ-1951-07-06-011	277, 289
WZ-0950-01-11-011	348, 350	WZ-1718-08-01-000	125	WZ-1718-97-05-000	117, 297	WZ-1951-07-07-011	277, 289
WZ-0950-01-12-011	348, 350	WZ-1718-08-02-000	125	WZ-1718-97-06-000	117, 297	WZ-1951-07-13-011	277, 289
WZ-0950-01-13-011	348, 350	WZ-1718-09-01-011	125	WZ-1718-97-07-000	117, 297	WZ-1951-07-14-011	277, 289
WZ-0950-01-14-011	348, 350	WZ-1718-09-01-161	125	WZ-1718-97-08-000	117, 297	WZ-1951-07-29-011	277, 289
WZ-0950-01-15-011	348, 350	WZ-1718-09-02-011	125	WZ-1718-97-09-000	117, 297	WZ-1951-09-01-011	277, 289
WZ-0950-01-16-011	348, 350	WZ-1718-09-02-161	125	WZ-1718-97-10-000	117, 297	WZ-1951-09-02-011	277, 289
WZ-0950-01-17-011	348, 350	WZ-1718-37-01-011	125, 309	WZ-1718-97-11-000	117, 297	WZ-1951-09-03-011	277, 289
WZ-0950-01-18-011	348, 350	WZ-1718-37-01-161	125	WZ-1718-97-12-000	117, 297	WZ-1951-09-05-011	277, 289
WZ-0950-01-19-011	348, 350	WZ-1718-37-02-011	125, 309	WZ-1718-97-13-000	117, 297	WZ-1951-09-06-011	277, 289
WZ-0950-01-20-011	348, 350	WZ-1718-37-02-161	125	WZ-1718-97-14-000	117, 297	WZ-1951-09-13-011	277, 289
WZ-0950-01-21-011	348, 350	WZ-1718-38-01-011	125	WZ-1718-97-15-000	117, 297	WZ-1951-10-01-011	286
WZ-0950-01-22-011	348, 350	WZ-1718-38-01-161	125	WZ-1718-97-16-000	117, 297	WZ-1951-10-02-011	286
WZ-0950-01-23-011	348, 350	WZ-1718-38-02-011	125	WZ-1718-97-17-000	117, 297	WZ-1951-10-03-011	286
WZ-0950-01-24-011	348, 350	WZ-1718-38-02-161	125	WZ-1718-97-20-000	117	WZ-1951-10-04-011	286
WZ-0950-01-25-011	348, 350	WZ-1718-39-01-011	125, 309	WZ-1718-98-01-000	117	WZ-1951-13-01-011	287
WZ-0950-01-26-011	348, 350	WZ-1718-39-01-161	125	WZ-1718-98-02-000	117	WZ-1951-13-02-011	287
WZ-0950-01-27-011	348, 350	WZ-1718-39-02-011	125, 309	WZ-1718-98-03-000	117	WZ-1951-13-03-011	287
WZ-0950-01-28-011	348, 350	WZ-1718-39-02-161	125	WZ-1718-98-04-000	117	WZ-1951-15-01-011	287
WZ-0950-01-29-011	348, 350	WZ-1718-40-01-011	125, 309	WZ-1718-98-05-000	117	WZ-1951-15-02-011	287
WZ-0950-01-30-011	348, 350	WZ-1718-40-01-161	125	WZ-1718-98-06-000	117	WZ-1951-15-03-011	287
WZ-0950-01-31-011	348, 350	WZ-1718-40-02-011	125, 309	WZ-1718-98-07-000	117	WZ-1951-17-01-011	286
WZ-0950-01-32-011	348, 350	WZ-1718-40-02-161	125	WZ-1718-98-08-000	117	WZ-1951-17-02-011	286
WZ-0950-01-33-011	348, 350	WZ-1718-42-01-011	125, 309	WZ-1718-98-09-000	117	WZ-1951-17-03-011	286
WZ-0950-01-34-011	348, 350	WZ-1718-42-01-161	125	WZ-1718-98-10-000	117	WZ-1951-17-04-011	286
WZ-0950-01-35-011	348, 350	WZ-1718-42-02-011	125, 309	WZ-1718-98-11-000	117	WZ-1951-19-01-000	300
WZ-0950-01-36-011	348, 350	WZ-1718-42-02-161	125	WZ-1718-98-12-000	117	WZ-1951-19-02-000	300
WZ-0950-01-37-011	348, 350	WZ-1718-59-01-011	126	WZ-1718-98-13-000	117	WZ-1951-19-03-000	300
WZ-0950-01-38-011	348, 350	WZ-1718-59-01-161	126	WZ-1718-98-14-000	117	WZ-1951-19-04-000	300
WZ-0950-01-39-011	348, 350	WZ-1718-59-02-011	126	WZ-1718-98-15-000	117	WZ-1951-19-05-000	300
WZ-0950-01-40-011	348, 350	WZ-1718-59-02-161	126	WZ-1718-A9-01-011	104	WZ-1951-19-06-000	300
WZ-0950-01-41-011	348, 350	WZ-1718-59-03-011	126	WZ-1718-A9-01-161	104	WZ-1951-19-07-000	300
WZ-0950-01-42-011	348, 350	WZ-1718-59-03-161	126	WZ-1718-A9-02-011	104	WZ-1951-19-08-000	300
WZ-0950-01-43-011	348, 350	WZ-1718-59-05-011	126	WZ-1718-A9-02-161	104	WZ-1951-19-09-000	300
WZ-0950-01-44-011	348, 350	WZ-1718-59-05-161	126	WZ-1951-01-01-011	274, 277, 279	WZ-1951-19-10-000	300
WZ-0950-01-45-011	348, 350	WZ-1718-59-07-011	126	WZ-1951-01-02-011	274, 277, 279	WZ-1951-19-11-000	300

CATALOGUE NUMBER INDEX

WZ-1951-19-12-000 300
WZ-1951-20-01-011 277
WZ-1951-20-02-011 277
WZ-1951-21-00-000 301
WZ-1951-22-01-000 277, 303
WZ-1951-22-02-000 277, 303
WZ-1951-22-03-000 277, 303
WZ-1951-22-04-000 277, 303
WZ-1951-24-01-000 277, 304
WZ-1951-24-02-000 277, 304
WZ-1951-24-03-000 277, 304
WZ-1951-24-04-000 277, 304
WZ-1951-25-01-000 277, 304
WZ-1951-25-02-000 277, 304
WZ-1951-25-03-000 277, 304
WZ-1951-25-04-000 277, 304
WZ-1951-26-00-011 309
WZ-1951-27-01-011 277, 288
WZ-1951-27-02-011 277, 288
WZ-1951-27-03-011 277, 288
WZ-1951-27-05-011 277, 288
WZ-1951-27-06-011 277, 288
WZ-1951-27-07-011 277, 288
WZ-1951-27-08-011 277, 288
WZ-1951-27-09-011 277, 288
WZ-1951-27-10-011 277, 288
WZ-1951-27-11-011 277, 288
WZ-1951-27-12-011 277, 288
WZ-1951-27-13-011 277, 288
WZ-1951-27-14-011 277, 288
WZ-1951-28-01-011 277, 288
WZ-1951-28-02-011 277, 288
WZ-1951-28-03-011 277, 288
WZ-1951-28-05-011 277, 288
WZ-1951-28-06-011 277, 288
WZ-1951-28-07-011 277, 288
WZ-1951-28-08-011 277, 288
WZ-1951-28-09-011 277, 288
WZ-1951-28-10-011 277, 288
WZ-1951-28-11-011 277, 288
WZ-1951-28-12-011 277, 288
WZ-1951-28-13-011 277, 288
WZ-1951-28-14-011 277, 288
WZ-1951-29-01-011 277
WZ-1951-29-02-011 277
WZ-1951-31-01-000 310
WZ-1951-31-02-000 310
WZ-1951-31-03-000 310
WZ-1951-31-05-000 310
WZ-1951-31-06-000 310
WZ-1951-31-13-000 310
WZ-1951-32-00-000 287
WZ-1951-33-00-000 305, 338
WZ-1951-36-01-011 286
WZ-1951-36-02-011 286
WZ-1951-36-03-011 286
WZ-1951-36-04-011 286
WZ-1951-36-09-011 286
WZ-1951-36-10-011 286
WZ-1951-36-11-011 286
WZ-1951-36-12-011 286
WZ-1951-40-01-011 286
WZ-1951-40-02-011 286
WZ-1951-40-03-011 286
WZ-1951-40-04-011 286
WZ-1951-40-09-011 286
WZ-1951-40-10-011 286
WZ-1951-40-11-011 286
WZ-1951-40-12-011 286
WZ-1951-41-03-000 307
WZ-1951-44-01-000 296, 298, 301, 334
WZ-1951-44-02-000 298, 301
WZ-1951-44-03-000 298, 301
WZ-1951-45-00-000 310
WZ-1951-46-01-000 299
WZ-1951-46-02-000 299
WZ-1951-46-03-000 299
WZ-1951-46-04-000 299
WZ-1951-46-05-000 299
WZ-1951-46-06-000 299
WZ-1951-46-07-000 299
WZ-1951-46-08-000 299
WZ-1951-47-01-000 277, 310
WZ-1951-47-02-000 277, 310
WZ-1951-48-01-000 300
WZ-1951-48-02-000 300
WZ-1951-52-01-011 287
WZ-1951-52-02-011 287
WZ-1951-52-03-011 287
WZ-1951-54-01-011 287
WZ-1951-54-02-011 287
WZ-1951-54-03-011 287
WZ-1951-57-01-011 287
WZ-1951-57-02-011 287
WZ-1951-57-03-011 287
WZ-1951-59-01-011 287
WZ-1951-59-02-011 287
WZ-1951-59-03-011 287
WZ-1951-64-01-000 293
WZ-1951-64-02-000 293
WZ-1951-64-03-000 293
WZ-1951-64-04-000 293
WZ-1951-65-01-000 277, 302
WZ-1951-65-02-000 277, 302
WZ-1951-65-03-000 277, 302
WZ-1951-65-04-000 277, 302
WZ-1951-66-01-000 277, 302
WZ-1951-66-02-000 277, 302
WZ-1951-66-03-000 277, 302
WZ-1951-66-04-000 277, 302
WZ-1951-67-01-000-BP 293
WZ-1951-67-04-000-BP 293
WZ-1951-67-07-000-BP 293
WZ-1951-67-10-000-BP 293
WZ-1951-67-13-000-BP 293
WZ-1951-67-19-000-BP 293
WZ-1951-67-22-000-BP 293
WZ-1951-68-00-000 290
WZ-1951-71-01-011 277, 292
WZ-1951-71-02-011 277, 292
WZ-1951-71-03-011 277, 292
WZ-1951-71-05-011 277, 292
WZ-1951-71-06-011 277, 292
WZ-1951-71-07-011 277, 292
WZ-1951-71-08-011 277, 292
WZ-1951-71-09-011 277, 292
WZ-1951-71-10-011 277, 292
WZ-1951-71-11-011 277, 292
WZ-1951-71-12-011 277, 292
WZ-1951-71-13-011 277, 292
WZ-1951-71-14-011 277, 292
WZ-1951-74-01-011 277, 292
WZ-1951-74-02-011 277, 292
WZ-1951-74-03-011 277, 292
WZ-1951-74-05-011 277, 292
WZ-1951-74-06-011 277, 292
WZ-1951-74-07-011 277, 292
WZ-1951-74-08-011 277, 292
WZ-1951-74-09-011 277, 292
WZ-1951-74-10-011 277, 292
WZ-1951-74-11-011 277, 292
WZ-1951-74-12-011 277, 292
WZ-1951-74-13-011 277, 292
WZ-1951-74-14-011 277, 292
WZ-1951-80-01-011 277, 306
WZ-1951-80-02-011 277, 306
WZ-1951-80-03-011 277, 306
WZ-1951-80-04-011 277, 306
WZ-1951-81-01-000 308
WZ-1951-81-02-000 308
WZ-1951-81-03-000 308
WZ-1982-03-01-011 291
WZ-1982-03-02-011 329
WZ-1982-03-03-011 291
WZ-1982-03-04-011 291
WZ-1982-03-05-011 105, 291, 329
WZ-1982-03-05-161 105
WZ-1982-03-06-011 291
WZ-1982-03-07-011 105, 291, 329
WZ-1982-03-07-161 105
WZ-1982-03-08-011 105, 291, 329
WZ-1982-03-08-161 105
WZ-1982-03-09-011 291, 329
WZ-1982-03-12-011 329
WZ-1982-04-01-011 291
WZ-1982-04-02-011 329
WZ-1982-04-03-011 291
WZ-1982-04-04-011 291
WZ-1982-04-05-011 105, 291, 329
WZ-1982-04-05-161 105
WZ-1982-04-06-011 291
WZ-1982-04-07-011 105, 291, 329
WZ-1982-04-07-161 105
WZ-1982-04-08-011 105, 291, 329
WZ-1982-04-08-161 105
WZ-1982-04-09-011 291, 329
WZ-1982-04-12-011 329
WZ-1982-05-01-011 291
WZ-1982-05-02-011 329
WZ-1982-05-03-011 291
WZ-1982-05-04-011 291
WZ-1982-05-05-011 105, 291, 329
WZ-1982-05-05-161 105
WZ-1982-05-06-011 291
WZ-1982-05-07-011 105, 291, 329
WZ-1982-05-07-161 105
WZ-1982-05-08-011 105, 291, 329
WZ-1982-05-08-161 105
WZ-1982-05-09-011 291, 329
WZ-1982-05-12-011 329
WZ-1982-08-02-011 105, 292, 330
WZ-1982-08-02-161 105
WZ-2048-24-01-000 94
WZ-2048-50-01-000 94
WZ-2048-50-02-000 94
WZ-2174-05-02-011 105, 292, 330
WZ-2174-05-02-161 105
WZ-2285-01-01-011 340, 343
WZ-2285-01-02-011 340, 343
WZ-2285-01-03-011 340, 343
WZ-2285-01-04-011 340, 343
WZ-2285-01-05-011 340, 343
WZ-2285-01-06-011 340, 343
WZ-2285-01-07-011 340, 343
WZ-2285-01-08-011 340, 343
WZ-2285-01-09-011 340, 343
WZ-2285-01-10-011 340, 343
WZ-2285-01-11-011 340, 343
WZ-2285-01-12-011 340, 343
WZ-2285-01-13-011 340, 343
WZ-2285-01-14-011 340, 343
WZ-2285-01-15-011 340, 343
WZ-2285-01-16-011 340, 343
WZ-2285-01-17-011 340, 343
WZ-2285-01-18-011 340, 343
WZ-2285-01-19-011 340, 343

CATALOGUE NUMBER INDEX

WZ-2285-01-20-011 340, 343
WZ-2285-10-01-000 343, 344
WZ-2285-10-02-000 343, 344
WZ-2285-13-00-000 343, 344
WZ-2285-14-00-000 343, 345
WZ-2378-19-00-011 101
WZ-2401-05-02-011 105
WZ-2401-05-02-161 105
WZ-2402-05-02-011 105
WZ-2402-05-02-161 105
WZ-2493-11-00-000 99
WZ-2522-01-01-011 91
WZ-2522-01-02-011 91
WZ-2522-02-01-011 90
WZ-2522-02-02-011 90
WZ-2522-02-03-011 90
WZ-2565-13-02-000-DC 121
WZ-2645-09-00-000 127
WZ-2645-11-01-011 127
WZ-2645-12-01-000 127
WZ-2645-15-00-000 120
WZ-2733-01-F1-011 83
WZ-2733-01-F2-011 83
WZ-2733-01-F3-011 83
WZ-2733-01-F4-011 83
WZ-2733-01-F5-011 83
WZ-2733-01-F6-011 83
WZ-2733-01-M1-011 83
WZ-2733-01-M2-011 83
WZ-2733-01-M3-011 83
WZ-2733-01-M4-011 83
WZ-2733-01-M5-011 83
WZ-2733-01-M6-011 83
WZ-2733-01-S1-011 83
WZ-2733-01-S2-011 83
WZ-2733-01-S3-011 83
WZ-2733-01-S4-011 83
WZ-2733-01-S5-011 83
WZ-2733-01-S6-011 83
WZ-2733-13-00-000 94
WZ-3004-00-01-011 69
WZ-3004-00-02-011 69
WZ-3004-00-03-011 69
WZ-3004-00-04-011 69
WZ-3004-00-05-011 69
WZ-3004-00-06-011 69
WZ-3004-11-00-011 107
WZ-3074-83-00-011 113
WZ-3074-83-00-161 113
WZ-3074-83-04-011 113
WZ-3074-83-04-161 113
WZ-3174-03-01-011 186
WZ-3174-03-01-161 186
WZ-3174-03-02-011 186
WZ-3174-03-02-161 186
WZ-3174-03-03-011 186
WZ-3174-03-03-161 186
WZ-3174-03-04-011 186
WZ-3174-03-04-161 186
WZ-3174-03-05-011 186
WZ-3174-03-05-161 186
WZ-3174-03-06-011 186
WZ-3174-03-06-161 186
WZ-3196-27-00-000 128
WZ-3286-01-M1-011 83
WZ-3286-01-M2-011 83
WZ-3286-01-M3-011 83
WZ-3286-01-M4-011 83
WZ-3286-01-M5-011 83
WZ-3286-01-M6-011 83
WZ-3286-01-S1-011 83
WZ-3286-01-S2-011 83
WZ-3286-01-S3-011 83
WZ-3286-01-S4-011 83
WZ-3286-01-S5-011 83
WZ-3286-01-S6-011 83
WZ-3393-11-00-000 120
WZ-3503-09-04-011-3U 109
WZ-3503-09-19-011-3U 109
WZ-3503-09-27-011-3U 109
WZ-3503-09-42-011-3U 109
WZ-3503-11-07-011-2SZT 110
WZ-3503-11-07-161-2SZT 110
WZ-3503-11-67-011-2SZT 110
WZ-3503-11-67-161-2SZT 110
WZ-3504-01-01-011 87
WZ-3504-01-02-011 87
WZ-3504-01-03-011 87
WZ-3504-01-04-011 87
WZ-3504-01-05-011 87
WZ-3504-01-M1-011 87
WZ-3504-01-M2-011 87
WZ-3504-01-M3-011 87
WZ-3504-01-M4-011 87
WZ-3504-01-M5-011 87
WZ-3504-14-01-000 92
WZ-3504-14-02-000 92
WZ-3504-14-03-000 92
WZ-3504-14-04-000 92
WZ-3504-14-05-000 92
WZ-3504-15-01-000 92
WZ-3504-15-02-000 92
WZ-3504-15-03-000 92
WZ-3504-15-04-000 92
WZ-3504-15-05-000 92
WZ-3504-16-00-000 94
WZ-3504-22-00-000 92
WZ-3505-01-01-011 85
WZ-3505-01-02-011 85
WZ-3505-01-03-011 85
WZ-3505-01-04-011 85
WZ-3505-01-05-011 85
WZ-3505-01-M1-011 85
WZ-3505-01-M2-011 85
WZ-3505-01-M3-011 85
WZ-3505-01-M4-011 85
WZ-3505-01-M5-011 85
WZ-3661-01-01-011 268
WZ-3661-01-02-011 268
WZ-3684-01-00-011 89
WZ-3684-01-01-011 89
WZ-3684-01-02-011 89
WZ-3715-01-01-011 87
WZ-3715-01-02-011 87
WZ-3715-01-03-011 87
WZ-3715-01-04-011 87
WZ-3715-01-05-011 87
WZ-3715-01-06-011 87
WZ-3715-01-07-011 87
WZ-3715-01-08-011 87
WZ-3715-01-09-011 87
WZ-3715-01-10-011 87
WZ-3839-14-01-000 92
WZ-3839-15-01-000 92
WZ-3987-01-01-011 75
WZ-3987-01-01-161 75
WZ-3987-01-02-011 75
WZ-3987-01-02-161 75
WZ-3987-01-03-011 75
WZ-3987-01-03-161 75
WZ-3987-01-04-011 75
WZ-3987-01-04-161 75
WZ-3987-90-00-000 74
WZ-4755-20-01-000 264
WZ-4755-20-02-000 264
WZ-4755-20-03-000 264
WZ-4755-20-04-000 264
WZ-4755-20-05-000 264
WZ-4755-20-06-000 264
WZ-4755-20-07-000 264
WZ-4755-20-08-000 264
WZ-4755-25-01-000 264
WZ-4755-25-02-000 264
WZ-4755-25-03-000 264
WZ-4755-25-04-000 264
WZ-4755-25-05-000 264
WZ-4755-25-06-000 264
WZ-4755-25-07-000 264
WZ-4755-25-08-000 264
WZ-4810-07-00-011 309
WZ-4881-67-01-000 315
WZ-4881-67-02-000 315
WZ-4881-68-01-011 316
WZ-4881-68-02-011 316
WZ-4881-68-03-011 316
WZ-4881-68-04-011 316
WZ-4881-68-05-011 317
WZ-4881-68-06-011 317
WZ-4881-68-07-011 317
WZ-4881-68-08-011 317
WZ-4881-69-01-011 317
WZ-4881-69-02-011 317
WZ-4881-70-01-011 317
WZ-4881-70-02-011 317
WZ-4881-70-03-011 317
WZ-4881-70-04-011 317
WZ-4881-71-01-011 317
WZ-4881-71-02-011 317
WZ-4881-71-03-011 317
WZ-4881-71-04-011 317
WZ-4881-72-01-011 317
WZ-4881-72-02-011 317
WZ-4881-72-03-011 317
WZ-4881-72-04-011 317
WZ-4888-01-00-161 77
WZ-4994-01-00-161 143
WZ-5205-82-05-011 110
WZ-5205-82-05-161 110
WZ-5205-82-06-011 110
WZ-5205-82-06-161 110
WZ-5205-82-17-011 110
WZ-5205-82-17-161 110
WZ-5205-82-18-011 110
WZ-5205-82-18-161 110
WZ-5205-90-00-C12 118, 297
WZ-5367-01-01-161 170
WZ-5367-01-02-011 170
WZ-5367-01-02-161 170
WZ-5367-01-03-011 170
WZ-5367-01-03-161 170
WZ-5367-01-04-011 170
WZ-5367-01-04-161 170
WZ-5367-01-05-011 170
WZ-5367-01-05-161 170
WZ-5367-01-06-011 170
WZ-5367-01-06-161 170
WZ-5367-02-01-011 170
WZ-5367-02-01-161 170
WZ-5367-02-02-011 170
WZ-5367-02-02-161 170
WZ-5367-02-03-011 170
WZ-5367-02-03-161 170
WZ-5367-02-04-011 170
WZ-5367-02-04-161 170
WZ-5367-02-05-011 170
WZ-5367-02-05-161 170

CATALOGUE NUMBER INDEX

WZ-5367-02-06-011 170
WZ-5367-02-06-161 170
WZ-5367-03-01-161 170
WZ-5367-03-02-011 170
WZ-5367-03-02-161 170
WZ-5367-03-03-011 170
WZ-5367-03-03-161 170
WZ-5367-03-04-011 170
WZ-5367-03-04-161 170
WZ-5367-03-05-011 170
WZ-5367-03-05-161 170
WZ-5367-03-06-011 170
WZ-5367-03-06-161 170
WZ-5367-04-01-011 170
WZ-5367-04-01-161 170
WZ-5367-04-02-011 170
WZ-5367-04-02-161 170
WZ-5367-04-03-011 170
WZ-5367-04-03-161 170
WZ-5367-04-04-011 170
WZ-5367-04-04-161 170
WZ-5367-04-05-161 170
WZ-5367-04-06-161 170
WZ-5367-20-01-011 171
WZ-5367-20-01-161 171
WZ-5367-20-02-011 171
WZ-5367-20-02-161 171
WZ-5367-20-03-011 171
WZ-5367-20-03-161 171
WZ-5367-20-04-011 171
WZ-5367-20-04-161 171
WZ-5367-30-01-011 177
WZ-5367-30-01-161 177
WZ-5367-30-02-011 177
WZ-5367-30-02-161 177
WZ-5367-30-03-011 177
WZ-5367-30-03-161 177
WZ-5367-31-01-011 177
WZ-5367-31-01-161 177
WZ-5367-31-02-011 177
WZ-5367-31-02-161 177
WZ-5367-31-03-011 177
WZ-5367-31-03-161 177
WZ-5367-32-01-011 177
WZ-5367-32-01-161 177
WZ-5367-32-02-011 177
WZ-5367-32-02-161 177
WZ-5367-32-03-011 177
WZ-5367-32-03-161 177
WZ-5367-33-01-011 178
WZ-5367-33-01-161 178
WZ-5367-33-02-011 178
WZ-5367-33-02-161 178
WZ-5367-35-00-011 179
WZ-5367-35-00-161 179
WZ-5367-40-00-011 179
WZ-5367-40-00-161 179
WZ-5367-45-01-000 177
WZ-5367-45-02-000 177
WZ-5367-52-01-011 141
WZ-5367-52-01-161 141
WZ-5367-52-02-011 141
WZ-5367-52-02-161 141
WZ-5367-52-03-011 141
WZ-5367-52-03-161 141
WZ-5367-53-01-011 140
WZ-5367-53-01-161 140
WZ-5367-53-02-011 140
WZ-5367-53-02-161 140
WZ-5367-60-01-011 171
WZ-5367-60-01-161 171
WZ-5367-60-02-011 171
WZ-5367-60-02-161 171
WZ-5367-60-03-011 171
WZ-5367-60-03-161 171
WZ-5367-60-04-011 171
WZ-5367-60-04-161 171
WZ-5367-60-05-011 171
WZ-5367-60-05-161 171
WZ-5367-60-06-011 171
WZ-5367-60-06-161 171
WZ-5367-60-07-011 171
WZ-5367-60-07-161 171
WZ-5367-60-08-011 171
WZ-5367-60-08-161 171
WZ-5367-60-09-011 171
WZ-5367-60-09-161 171
WZ-5367-60-10-011 171
WZ-5367-60-10-161 171
WZ-5367-60-11-011 171
WZ-5367-60-11-161 171
WZ-5367-60-12-011 171
WZ-5367-60-12-161 171
WZ-5507-16-01-000 117
WZ-5507-16-02-000 117
WZ-5507-16-03-000 117
WZ-5507-16-08-000 117
WZ-5571-42-00-000 108
WZ-5596-01-01-011 119
WZ-5596-01-02-011 119
WZ-5596-01-03-011 119
WZ-5596-01-04-011 119
WZ-5596-01-05-011 119
WZ-5596-01-06-011 119
WZ-5596-01-07-011 119
WZ-5596-01-08-011 119
WZ-5596-01-09-011 119
WZ-5596-01-10-011 119
WZ-5596-01-11-011 119
WZ-5596-01-12-011 119
WZ-5596-01-13-011 119
WZ-5596-01-14-011 119
WZ-5596-01-15-011 119
WZ-5596-01-16-011 119
WZ-5596-01-17-011 119
WZ-5596-01-18-011 119
WZ-5606-05-02-011 182
WZ-5606-05-02-161 182
WZ-5606-10-02-011 182
WZ-5606-10-02-161 182
WZ-5606-25-02-011 182
WZ-5606-25-02-161 182
WZ-5606-35-02-011 182
WZ-5606-35-02-161 182
WZ-5714-52-00-011 111
WZ-5714-52-00-161 111
WZ-5714-53-00-011 111
WZ-5714-53-00-161 111
WZ-5716-38-01-011 295
WZ-5716-38-02-011 295
WZ-5716-38-03-011 295
WZ-5841-02-01-011 112
WZ-5841-02-01-161 112
WZ-5841-02-02-011 112
WZ-5841-02-02-161 112
WZ-5841-02-03-011 112
WZ-5841-02-03-161 112
WZ-5841-02-04-011 112
WZ-5841-02-04-161 112
WZ-5841-02-05-011 112
WZ-5841-02-05-161 112
WZ-5841-04-01-011 112
WZ-5841-04-01-161 112
WZ-5841-04-02-011 112
WZ-5841-04-02-161 112
WZ-5841-04-03-011 112
WZ-5841-04-03-161 112
WZ-5841-04-04-011 112
WZ-5841-04-04-161 112
WZ-5841-06-00-011 114
WZ-5841-06-00-161 114
WZ-5841-08-00-011 114
WZ-5841-08-00-161 114
WZ-5841-14-01-011 111
WZ-5841-14-01-161 111
WZ-5841-14-02-011 111
WZ-5841-14-02-161 111
WZ-5841-14-03-011 111
WZ-5841-14-03-161 111
WZ-5841-14-04-011 111
WZ-5841-14-04-161 111
WZ-5922-02-01-000 345
WZ-5922-02-02-000 345
WZ-5922-02-03-000 345
WZ-5922-02-04-000 345
WZ-5922-02-05-000 345
WZ-5922-02-06-000 345
WZ-5922-02-07-000 345
WZ-5922-02-08-000 345
WZ-6026-01-01-011 98
WZ-6026-01-02-011 98
WZ-6026-01-04-011 98
WZ-6026-01-05-011 98
WZ-6026-10-00-011 99
WZ-6170-01-05-011 96
WZ-6170-01-06-011 96
WZ-6170-01-07-011 96
WZ-6170-01-08-011 96
WZ-6171-01-24-011 100
WZ-6171-01-36-011 100
WZ-6171-01-42-011 100
WZ-6171-01-45-011 100
WZ-6171-04-00-011 101
WZ-6186-05-01-011 170
WZ-6186-05-01-161 170
WZ-6186-05-02-011 170
WZ-6186-05-02-161 170
WZ-6186-05-03-161 170
WZ-6186-05-04-011 170
WZ-6186-05-04-161 170
WZ-6186-05-05-011 170
WZ-6186-05-05-161 170
WZ-6186-05-06-011 170
WZ-6186-05-06-161 170
WZ-6186-05-07-011 170
WZ-6186-05-07-161 170
WZ-6186-05-08-011 170
WZ-6186-05-08-161 170
WZ-6186-05-09-011 170
WZ-6186-05-09-161 170
WZ-6186-05-10-011 170
WZ-6186-05-10-161 170
WZ-6186-05-11-011 170
WZ-6186-05-11-161 170
WZ-6186-05-12-011 170
WZ-6186-05-12-161 170
WZ-6186-22-01-011 262
WZ-6186-22-01-161 262
WZ-6186-22-02-011 262
WZ-6186-22-02-161 262
WZ-6186-22-03-011 262
WZ-6186-22-03-161 262
WZ-6248-01-01-011 193
WZ-6248-01-01-161 193
WZ-6248-01-02-011 193
WZ-6248-01-02-161 193

CATALOGUE NUMBER INDEX

WZ-6248-01-03-011	193	WZ-6282-01-39-011	320, 325	WZ-6282-33-08-000	331	WZ-6282-74-03-011	326
WZ-6248-01-03-161	193	WZ-6282-01-40-011	320, 325	WZ-6282-33-09-000	331	WZ-6282-74-04-011	326
WZ-6248-01-04-011	193	WZ-6282-01-41-011	320, 323	WZ-6282-33-10-000	331	WZ-6282-74-05-011	326
WZ-6248-01-04-161	193	WZ-6282-01-42-011	320, 323	WZ-6282-33-11-000	331	WZ-6282-74-06-011	326
WZ-6248-01-05-011	193	WZ-6282-01-43-011	320, 323	WZ-6282-33-12-000	331	WZ-6282-74-07-011	326
WZ-6248-01-05-161	193	WZ-6282-01-44-011	320, 323	WZ-6282-35-01-000	331	WZ-6282-74-08-011	326
WZ-6248-01-06-011	193	WZ-6282-01-45-011	320, 323	WZ-6282-35-02-000	331	WZ-6282-74-09-011	326
WZ-6248-01-06-161	193	WZ-6282-01-46-011	320, 323	WZ-6282-35-03-000	331	WZ-6282-74-10-011	326
WZ-6249-01-01-011	193	WZ-6282-01-47-011	320, 323	WZ-6282-35-04-000	331	WZ-6282-74-11-011	326
WZ-6249-01-01-161	193	WZ-6282-01-48-011	320, 323	WZ-6282-36-00-000	332	WZ-6282-74-12-011	326
WZ-6249-01-02-011	193	WZ-6282-15-01-011	330	WZ-6282-40-01-000	334	WZ-6282-76-01-011	326
WZ-6249-01-02-161	193	WZ-6282-15-02-011	330	WZ-6282-40-02-000	334	WZ-6282-76-02-011	326
WZ-6249-01-03-011	193	WZ-6282-15-03-011	330	WZ-6282-40-03-000	334	WZ-6282-76-03-011	326
WZ-6249-01-03-161	193	WZ-6282-15-04-011	330	WZ-6282-40-04-000	334	WZ-6282-76-04-011	326
WZ-6249-01-04-011	193	WZ-6282-15-05-011	330	WZ-6282-40-05-000	334	WZ-6282-76-05-011	326
WZ-6249-01-04-161	193	WZ-6282-15-06-011	330	WZ-6282-40-06-000	334	WZ-6282-76-06-011	326
WZ-6282-01-01-011	320, 325	WZ-6282-15-07-011	330	WZ-6282-40-07-000	334	WZ-6282-76-07-011	326
WZ-6282-01-02-011	320, 325	WZ-6282-15-08-011	330	WZ-6282-40-08-000	334	WZ-6282-76-08-011	326
WZ-6282-01-03-011	320, 325	WZ-6282-15-09-011	330	WZ-6282-40-09-000	334	WZ-6282-76-09-011	326
WZ-6282-01-04-011	320, 325	WZ-6282-15-10-011	330	WZ-6282-40-10-000	334	WZ-6282-76-10-011	326
WZ-6282-01-05-011	320, 325	WZ-6282-15-11-011	330	WZ-6282-42-01-000	334	WZ-6282-76-11-011	326
WZ-6282-01-06-011	320, 325	WZ-6282-15-12-011	330	WZ-6282-42-02-000	334	WZ-6282-76-12-011	326
WZ-6282-01-07-011	320, 325	WZ-6282-15-13-011	330	WZ-6282-42-03-000	334	WZ-6282-78-01-000	325, 338
WZ-6282-01-08-011	320, 325	WZ-6282-15-14-011	330	WZ-6282-42-04-000	334	WZ-6282-78-02-000	325, 338
WZ-6282-01-09-011	320, 323	WZ-6282-15-15-011	330	WZ-6282-42-05-000	334	WZ-6282-78-03-000	323, 338
WZ-6282-01-10-011	320, 323	WZ-6282-15-16-011	330	WZ-6282-42-06-000	334	WZ-6282-78-04-000	323, 338
WZ-6282-01-11-011	320, 323	WZ-6282-18-01-011	323, 325, 328	WZ-6282-42-07-000	334	WZ-6282-79-01-000	325, 338
WZ-6282-01-12-011	320, 323	WZ-6282-18-02-011	323, 325, 328	WZ-6282-42-08-000	334	WZ-6282-79-02-000	325, 338
WZ-6282-01-13-011	320, 323	WZ-6282-18-03-011	323, 325, 328	WZ-6282-42-09-000	334	WZ-6282-79-03-000	323, 338
WZ-6282-01-14-011	320, 323	WZ-6282-18-04-011	323, 325, 328	WZ-6282-42-10-000	334	WZ-6282-79-04-000	323, 338
WZ-6282-01-15-011	320, 323	WZ-6282-18-05-011	323, 325, 328	WZ-6282-45-01-011	327	WZ-6282-81-01-011	327
WZ-6282-01-16-011	320, 323	WZ-6282-18-06-011	323, 325, 328	WZ-6282-45-02-011	327	WZ-6282-81-02-011	327
WZ-6282-01-17-011	320, 325	WZ-6282-18-07-011	323, 325, 328	WZ-6282-45-03-011	327	WZ-6282-81-03-011	327
WZ-6282-01-18-011	320, 325	WZ-6282-18-08-011	323, 325, 328	WZ-6282-45-04-011	327	WZ-6282-81-04-011	327
WZ-6282-01-19-011	320, 325	WZ-6282-18-09-011	323, 325, 328	WZ-6282-45-05-011	327	WZ-6282-81-05-011	327
WZ-6282-01-20-011	320, 325	WZ-6282-18-10-011	323, 325, 328	WZ-6282-45-06-011	327	WZ-6282-81-06-011	327
WZ-6282-01-21-011	320, 325	WZ-6282-18-11-011	323, 325, 328	WZ-6282-47-01-011	327	WZ-6282-83-01-011	327
WZ-6282-01-22-011	320, 325	WZ-6282-18-12-011	323, 325, 328	WZ-6282-47-02-011	327	WZ-6282-83-02-011	327
WZ-6282-01-23-011	320, 325	WZ-6282-24-01-000	323, 325, 336	WZ-6282-47-03-011	327	WZ-6282-83-03-011	327
WZ-6282-01-24-011	320, 325	WZ-6282-24-02-000	323, 325, 336	WZ-6282-47-04-011	327	WZ-6282-83-04-011	327
WZ-6282-01-25-011	320, 323	WZ-6282-24-03-000	323, 325, 336	WZ-6282-47-05-011	327	WZ-6282-83-05-011	327
WZ-6282-01-26-011	320, 323	WZ-6282-30-01-011	326	WZ-6282-47-06-011	327	WZ-6282-83-06-011	327
WZ-6282-01-27-011	320, 323	WZ-6282-30-02-011	326	WZ-6282-63-01-C08	323, 333	WZ-6282-85-01-011	327
WZ-6282-01-28-011	320, 323	WZ-6282-30-03-011	326	WZ-6282-63-02-C08	322, 323, 333	WZ-6282-85-02-011	327
WZ-6282-01-29-011	320, 323	WZ-6282-30-04-011	326	WZ-6282-63-03-C08	322, 333	WZ-6282-85-03-011	327
WZ-6282-01-30-011	320, 323	WZ-6282-30-05-011	326	WZ-6282-68-01-011	326	WZ-6282-85-04-011	327
WZ-6282-01-31-011	320, 323	WZ-6282-30-06-011	326	WZ-6282-68-02-011	326	WZ-6282-85-05-011	327
WZ-6282-01-32-011	320, 323	WZ-6282-33-01-000	331	WZ-6282-68-03-011	326	WZ-6282-85-06-011	327
WZ-6282-01-33-011	320, 325	WZ-6282-33-02-000	331	WZ-6282-68-04-011	326	WZ-6282-87-01-011	327
WZ-6282-01-34-011	320, 325	WZ-6282-33-03-000	331	WZ-6282-68-05-011	326	WZ-6282-87-02-011	327
WZ-6282-01-35-011	320, 325	WZ-6282-33-04-000	331	WZ-6282-68-06-011	326	WZ-6282-87-03-011	327
WZ-6282-01-36-011	320, 325	WZ-6282-33-05-000	331	WZ-6282-69-00-C12	328	WZ-6282-87-04-011	327
WZ-6282-01-37-011	320, 325	WZ-6282-33-06-000	331	WZ-6282-74-01-011	326	WZ-6282-87-05-011	327
WZ-6282-01-38-011	320, 325	WZ-6282-33-07-000	331	WZ-6282-74-02-011	326	WZ-6282-87-06-011	327

CATALOGUE NUMBER INDEX

WZ-6282-88-00-000 334
WZ-6400-63-00-000 337
WZ-6400-64-00-000 337
WZ-6647-30-00-161 184
WZ-6647-30-01-000 186
WZ-6729-01-03-011 75
WZ-6729-01-03-161 75
WZ-6729-01-04-011 75
WZ-6729-01-04-161 75
WZ-K12U-00-00-000 303
WZ-K16U-00-00-000 303
WZ-K20U-00-00-000 303
WZ-K24U-00-00-000 303
WZ-K28U-00-00-000 303
WZ-K32U-00-00-000 303
WZ-K36U-00-00-000 303
WZ-K40U-00-00-000 303
WZ-K44U-00-00-000 303
WZ-K48U-00-00-000 303
WZ-K52U-00-00-000 303
WZ-K56U-00-00-000 303
WZ-LZ11-40-00-000 130
WZ-LZ13-10-00-000 130
WZ-LZ16-10-00-000 269
WZ-LZ16-20-00-000 269
WZ-LZ16-30-00-000 269
WZ-LZ16-50-00-000 130
WZ-LZ16-60-00-000 130
WZ-LZ16-70-00-000 130
WZ-LZ16-80-00-000 130
WZ-LZ16-90-00-000 130
WZ-LZ21-10-00-000 130
WZ-LZ21-40-00-000 130
WZ-LZ22-10-00-000 130
WZ-LZ23-10-00-000 130
WZ-LZ30-F0-00-000 130
WZ-LZ31-20-00-000 130
WZ-LZ31-61-00-000 134
WZ-LZ31-62-00-000 134
WZ-LZ31-63-00-000 134
WZ-LZ31-64-00-000 134
WZ-LZ32-10-00-000 132
WZ-LZ32-20-00-000 132
WZ-LZ32-30-00-000 132
WZ-LZ32-40-00-000 132
WZ-LZ32-50-00-000 132
WZ-LZ32-60-00-000 132
WZ-LZ33-10-00-000 130
WZ-LZ33-21-00-000 136
WZ-LZ33-22-00-000 136
WZ-LZ33-23-00-000 136
WZ-LZ33-24-00-000 136
WZ-LZ52-10-00-000 130
WZ-LZ53-10-00-000 130
WZ-LZ53-20-00-000 130
WZ-LZI30-09-00-000 130
WZ-LZM1-61-00-000 138
WZ-LZM1-62-00-000 138
WZ-LZM1-63-00-000 138
WZ-LZM1-64-00-000 138
WZ-LZM1-65-00-000 138
WZ-LZM3-16-10-000 138
WZ-LZM3-16-20-000 138
WZ-LZM3-16-30-000 138
WZ-LZM3-21-00-000 138
WZ-LZM3-22-00-000 138
WZ-LZM3-23-00-000 138
WZ-LZM3-24-00-000 138
WZ-LZM3-25-00-000 138
WZ-LZM3-32-10-000 138
WZ-LZM3-32-20-000 138
WZ-LZM3-32-30-000 138
WZ-LZM3-32-40-000 138
WZ-PS3U-00-00-011 156, 295
WZ-PS3U-00-00-161 156, 295
WZ-SB00-27-01-000 118
WZ-SB00-27-02-000 118
WZ-SB00-27-03-000 118
WZ-SB00-27-04-000 118
WZ-SB00-27-05-000 118
WZ-SB00-28-01-000 119
WZ-SB00-28-02-000 119
WZ-SB00-29-01-000 261
WZ-SB00-29-02-000 261
WZ-SB00-29-03-000 261
WZ-SB00-29-04-000 261
WZ-SB00-29-05-000 261
WZ-SB00-31-01-000 263
WZ-SB00-31-02-000 263
WZ-SB00-31-03-000 263
WZ-SB00-31-04-000 263
WZ-SB00-31-05-000 263
WZ-SB00-31-06-000 263
WZ-SB00-31-07-000 263
WZ-SB00-31-08-000 263
WZ-SB00-31-09-000 263
WZ-SB00-31-10-000 263
WZ-SB00-31-13-000 263
WZ-SB00-31-14-000 263
WZ-SB00-31-15-000 263
WZ-SB00-31-16-000 263
WZ-SB00-31-17-000 263
WZ-SB00-31-18-000 263
WZ-SB00-31-19-000 263
WZ-SB00-31-20-000 263
WZ-SB00-31-21-000 263
WZ-SB00-31-22-000 263
WZ-SB00-31-25-000 263
WZ-SB00-31-26-000 263
WZ-SB00-31-27-000 263
WZ-SB00-31-28-000 263
WZ-SB00-31-29-000 263
WZ-SB00-31-30-000 263
WZ-SB00-31-31-000 263
WZ-SB00-31-32-000 263
WZ-SB00-31-33-000 263
WZ-SB00-31-34-000 263
WZ-SB00-31-35-000 263
WZ-SB00-31-36-000 263
WZ-SB00-32-01-011 123
WZ-SB00-32-02-011 123
WZ-SB00-32-03-011 123
WZ-SB00-32-04-011 123
WZ-SB00-32-05-011 123
WZ-SB00-32-06-011 123
WZ-SB00-33-01-011 123
WZ-SB00-33-01-161 123
WZ-SB00-33-02-011 123
WZ-SB00-33-02-161 123
WZ-SB00-33-03-011 123
WZ-SB00-33-03-161 123
WZ-SB00-33-04-011 123
WZ-SB00-33-04-161 123
WZ-SB00-33-05-011 123
WZ-SB00-33-05-161 123
WZ-SB00-33-06-011 123
WZ-SB00-33-06-161 123
WZ-SB00-37-04-000 118, 296, 315
WZ-SB00-40-00-011 116
WZ-SB00-49-01-011 111
WZ-SB00-49-01-161 111
WZ-SB00-49-02-011 111
WZ-SB00-49-02-161 111
WZ-SB00-49-03-011 111
WZ-SB00-49-03-161 111
WZ-SB00-49-04-011 111
WZ-SB00-49-04-161 111
WZ-SB00-49-05-011 111
WZ-SB00-49-05-161 111
WZ-SB02-00-02-000 109
WZ-SB02-00-08-000 109
WZ-SB02-00-14-000 109
WZ-SB02-00-20-000 109
WZ-SB12-00-01-000 120
WZ-SB12-00-02-000 120
WZ-SB25-00-00-000 121
WZ-SB28-00-01-011 111
WZ-SB28-00-02-011 111
WZ-SB28-00-03-011 111
WZ-SB28-00-03-161 111
WZ-SB28-00-04-011 111
WZ-SB28-00-04-161 111
WZ-SB52-00-01-000 260
WZ-SB52-00-02-000 260
WZ-SB52-00-03-000 260
WZ-SB52-00-04-000 260
WZ-SB52-00-05-000 260
WZ-SB52-00-06-000 260
WZ-SB52-00-07-000 260
WZ-SB53-00-01-000 260
WZ-SB53-00-02-000 260
WZ-SB53-00-03-000 260
WZ-SB53-00-04-000 260
WZ-SB53-00-05-000 260
WZ-SB53-00-06-000 260
WZ-SB53-00-07-000 260
WZ-SB54-00-01-000 260
WZ-SB54-00-02-000 260
WZ-SB54-00-03-000 260
WZ-SB54-00-04-000 260
WZ-SB54-00-05-000 260
WZ-SB54-00-06-000 260
WZ-SB54-00-07-000 260
WZ-SB55-00-00-011 260
WZ-SB55-00-00-161 260
WZ-SB63-00-01-011 123
WZ-SB63-00-01-161 123
WZ-SB63-00-02-011 123
WZ-SB63-00-02-161 123
WZ-SB66-00-00-011 187
WZ-SB66-00-00-161 187
WZ-SB67-00-00-011 116
WZ-SB67-00-00-161 116
WZ-SB72-00-01-000 106
WZ-SB72-00-02-000 106
WZ-SB73-00-01-000 107
WZ-SB73-00-02-000 107
WZ-SB74-00-01-011 107
WZ-SB74-00-02-011 107
WZ-SB76-00-00-011 125
WZ-SB76-00-00-161 125
WZ-SB78-00-04-011 116
WZ-SB78-00-04-161 116
WZ-SZBSE-003-5711-11-0000-2-161 51
WZ-SZBSE-005-5711-11-0000-2-011 51
WZ-SZBSE-005-5711-11-0000-2-161 51
WZ-SZBSE-006-5711-11-0000-2-011 51
WZ-SZBSE-006-5711-11-0000-2-161 51

INDEX OF NAMES OF PRODUCTS AND SOLUTIONS

A

Access control systems 205
Access terminal 210
Accessories for cabinets and open racks 103
Accessories for installers 237
Accessories for KVM consoles and switches 202
Accessories for mounting electrical equipment 295
Accessories for outdoor cabinets 375
Accessories for SZE2 industrial cabinets 285
Accessories for SZE3 industrial cabinets 326
Accessories for vertical installation of power strips 140
Adapters for installing 19" appliances on 21" mounting profiles 128
Adapters, fibre optic 252
Air conditioners 313
Air flow guide vane 178
Air flow guides 180
Air flow management in server cabinets 176
Air-conditioning systems 190
Angle element for joining mounting bars UNI 301
ARO 0.6 speed controller 186
Assembly angles 316
Assembly consisting of pull out stabiliser 104
Automatic transfer switch system 416
Auxiliaries switchgears 404

B

Backup power supply 148
Baying bolt for SZB, OTS1, SZB SE cabinets 121
Baying cabinets in rows 121
Baying cabinets in rows 310
Blanking and cable entry plates for cabinet's top plate 309
Blanking plate for DSR cable opening 127
Blanking plates 19" 123
Blanking plates for cabinet bottom, top and roof 124
Blind faceplate 226
Boxes and faceplates 225
Brackets for cabinet wall mounting 345
Brush panels 123
Brush strip for cable opening 92
Brush strips for cabinet bottom, top and roof 125
Brush strips, horizontal 177

C

Cabinet DSR 19" - colocation cabinet 64
Cabinet for fibre optic patch panels OptiTel SPS 19" 242
Cabinet OTS1 19" - network/server cabinet for on-site assembly 56
Cabinet prefabrication 418
Cabinet SD2 19" - wall-mounted network cabinet, double-section 84
Cabinet SJ2 19" - wall-mounted network cabinet, single-section 86
Cabinet SJB 19" - for office, with desktop 74
Cabinet SJB 19" Silent - for office, with desktop and acoustic foam 76
Cabinet SJK 19" - wall-mounted network cabinet, for light equipment 88
Cabinet SU 19" - wall-mounted network cabinet, single-section, with removable side panels 82
Cabinet SZB 19" - standard universal network cabinet 42
Cabinet SZB DO - management cabinet system 60
Cabinet SZB SE 19" - network cabinet 50
Cabinet SZBk 19" - compatible with EMC requirements 70
Cabinet SZE2 PC 19" - computer cabinet IP54 68
Cabinet SZU 19"/21" - telecommunication cabinet 78
Cabinet/rack base 104
Cabinets for electrical substations 404
Cable analyzer 236
Cable bar 303
Cable channel systems 265
Cable clamps 303
Cable clamps 260
Cable ducts PVC 263
Cable entry 377
Cable entry for cabinet bottom, top and roof 125
Cable gland plates and blanking plates 308
Cable holder 261
Cable management bar 19" 260
Cable management vertical 262
Cable management 259
Cable management 302
Cable opening cover for DSR divider 127
Cable organizers 19" 261
Cable storage boxes and frames - OptiTel SZK, STZK 248
Cable storage drawers - OptiTel SZP 244
Cable storage module - OptiTel MZ 244
Cable tray 264
Cables IT 239
Cabling components 219
Cabling system SOHO 10" 268
Capacitor banks 414
Castors 150 106
Castors 300 107
Castors set for SZE2 PC cabinet 107

INDEX OF NAMES OF PRODUCTS AND SOLUTIONS

CETUS multimedia kiosk 490
Cleaning foam 122
Closed-circuit cooling 174
Cold air deflector 179
Cold aisle 166
Compact data center 213
Comprehensive control room projects 477
Concrete foundations 386
Consoles with KVM switch 197
Consoles 196
Control cabinets 403
Control desks PSL 348
Control room projects 477
Cooling in closed-circuit 174
Cooling 311
Copper cabling components 219
Cover for splice cassette 250
Covers for installations boxes 228
C-profile for stiffening PVC cable ducts 263
C-profiles 117
Crimp tool for plugs 235
Cross bar CLASSIC 299
Cross bar 119
Cross cable stripper 235
Cross framework for cable storage module - OptiTel KZK 244
Cross profile for SU, SD2, SJ2, SJB cabinets 94

D

Data Box - cold/hot aisle 166
Data Box aisle panel 171
Data Box aisle roof 171
Data Center - compact 214
Data communication cables 239
DC 19" - server cabinets 163
Deflector 179
Desktop elevation kit for SJB cabinet 74
DIN rail 316
Dispatch and control desks 429
Dispatch workstations 429
Distribution boxes 234
Document drawer 116
Document pocket 116
Door stop 378
Door stop 287
Door switch 307, 378
Door system for Data Box aisle 170
Door, ventilated 186
Doors and side panels 109
Doors single/double-wing 286
Doors single/double-wing 326
Drawer for keyboard 116
Drawer with keyboard 115
Drawers 115
DSR 19" - colocation cabinet 64
Duct for hot air, vertical 179

E

Earthing 304
Earthing 338
Earthing bar set 304
Earthing bar 120
Earthing bar 338
Earthing bar 344
Earthing cable set 120
Earthing cable set 305
Earthing cable set 338
Earthing cables 344
Earthing elements for SU, SD2, SJ2, SJB cabinets 94
Earthing set 344
Earthing 120
Earthing 344
Electric meter box 295
Electric switchgears 412
Electrical sockets 226
Electronic lock 210
Elements for baying cabinets 310
Elements for baying DC server cabinets 121
Exhaust filters 312
Extension of outdoor cabinets 394
Eyebolt 290

F

Faceplates for keystones 225
Fan control 187
Fan kit for SU, SD2, SJ2, SJB cabinets 93
Fan units 182
Fans 312
Fasteners for SRK open rack 101
Fasteners for SRX open rack 99
Feet for cabinets and racks 108
Fibre optic adapters 252
Fibre optic enclosures and accessories 241
Fibre optic patch panels - OptiLAN PSP 19" 249

INDEX OF NAMES OF PRODUCTS AND SOLUTIONS

Fibre optic patch panels OptiTel PSP 19" 245
Fibre optic patchcords 252
Fibre optic pigtails, 252
Fibre optic wall-mounted distribution boxes - OptiLAN PSN 251
Fibre optic wall-mounted distribution boxes - OptiTel PSN 247
Fire extinguishing system for a single cabinet 158
Fire extinguishing systems for server rooms 159
Fire extinguishing 157
Fixing accessories for CLASIC and UNI bars 301
Fixing accessories 118
Fixing accessories 334
Floor-standing cabinets 41
Foam strips for cabinet bottom, top and roof 125
Frame connector 337
Frame for concrete 386
Frame RN 19" - wall-mounted network frame 90
Frame RNO 19" - wall-mounted network frame 91

G

Gas arrestor 233
Glass door 109
Guaranteed power supply 380
Guaranteed voltage switchgears 406
Guide bar 118
Guides for air flow 180

H

Handles for mounting of cabinet 379
Heat exchanger 313
Heater 311
Heater 385
Heating 311
High-load fixed shelf 114
High-load telescopic shelf 114
High-performance UPS 152
Horizontal brush strips 177
Horizontal module panels 317
Hot aisle 166
Hygrostat 188

I

Industrial cabinets SZE2 274
Industrial cabinets SZE3 320
Industrial enclosures/cabinets 271
Info kiosks 481
Insulating base 385
IT-Rooms 160

K

KCS-1 central signal box 461
Keyboard 499
Keystones and sockets 229
Keystones, cat. 5e 229
Keystones, cat. 6 and 6A 230
KSD signal boxes 460
KVM consoles 196
KVM switches 198

L

Labels and covers 233
Levelling feet for cabinets and racks 108
Lifting accessories 290
Lifting angle 290
Lifting eyes 128
Lighting kit 122
Lighting set 307
Lighting 122
Lighting 306
Lighting 337
Loudspeakers 499
LZ - power strips 130
LZ brackets 140
LZ fixing profile 141

M

Magazine for tri-pole arrestors 233
Maintenance and cleaning agents 122
Masking items 123
Masking panels, vertical 177
Meter cabinets 409
Mimic boards - sample realised projects 462
Mimic boards 451
Modular plinth 291
Modular plinth 329
Modular plug 237
Modular system 314
Module blanking plates 150, 100, 50 317
Module panel 150 316
Module panels, horizontal and vertical 317
Monitored power strips 138
Monitoring systems 205
Mount frame for telephone modules 232
Mounting angles for SU, SD2, SJ2, SJB cabinets 92
Mounting angles 117
Mounting bar CLASSIC 299

INDEX OF NAMES OF PRODUCTS AND SOLUTIONS

Mounting bar UNI 300
Mounting bars system 298
Mounting bars UNI 315
Mounting bars 334
Mounting plate 19" 93
Mounting plate infill 310
Mounting plate infill 336
Mounting plate 293
Mounting plate 331
Mounting profile II fixing elements 315
Mounting profile, 19" 297
Mounting profiles for SU, SD2, SJ2, SJB cabinets 92
Mounting profiles II 315
Mounting profiles system, 19" 296
Mounting profiles 117
MPSK G0 - microprocessor panel for fan control MPSK G0 187
MPSM-S1 Power Control Panel 142
Multimedia kiosks 481

N

Network card 500

O

Open racks 95
OptiLAN PSN - fibre optic wall-mounted distribution boxes 251
OptiLAN PSP 19" - fibre optic patch panels 249
OptiTel - fibre optic enclosures, patch panels 241
OptiTel KZK - cross framework for cable storage module 244
OptiTel MZ - cable storage module 244
OptiTel PSN - fibre optic wall-mounted distribution boxes 247
OptiTel PSP 19" - fibre optic patch panels 245
OptiTel SPS 19" - cabinet for fibre optic patch panels 242
OptiTel SZK, STZK - cable storage boxes and frames 248
OptiTel SZP - cable storage drawers 244
OTS1 19" - network/server cabinet for on-site assembly 56
Outdoor cabinets adapted for power supply systems 393
Outdoor cabinets custom solutions 397
Outdoor cabinets EMC 387
Outdoor cabinets for power industry 391
Outdoor cabinets for subscribers' access systems 388
Outdoor cabinets SZD 355
Outrigger 297
Outriggers 118
OVERSEE - monitoring system for equipment operation conditions 206

P

Paint 122
Panel for Data Box aisle 171
Partition 377
Partition 310
Patch cords 238
Patch panels 10" 269
Patch panels, cat. 3 231
Patch panels, cat. 5e and 6 222
Patch panels, cat. 6 and 6A 224
Patchcords, fibre optic 252
PD roof fan units 183
PDM dispatch and control desks 433
PDU-1 - switched power distribution unit 146
PDU-2 - switched power distribution unit 147
Perforated cable tray 264
Perforated steel door 110
Pigtails, fibre optic 252
Plinth corners 105
Plinth side panels 105
Plinth simple 104
Plinth with levelling option 104
Plinth with pull out stabiliser 104
Plinth, modular 329
Plinth, modular 291
Plinth, welded 292
Plinth, welded 330
Plinths for network/server cabinets 104
Pockets 116
Potential equalisation 338
Potential equalisation bar 304
Potential equalisation bar 338
Potential equalisation bar 344
Potential equalisation 304
Power Control Panel MPSM-S1 142
Power distribution unit PDU-1, remotely switched 146
Power distribution unit PDU-2, remotely switched 147
Power distribution units 146
Power generators 154
Power strips 10" 269
Power strips 16 A 130
Power strips 16 A, 32 A, 3 x 16 A, 3 x 32 A, monitored (Watchdog over IP) 138
Power strips 3 x 16 A 134
Power strips 3 x 32 A 136
Power strips 32 A 132
Power strips and power distribution units 129
Power supply 129
Power VS telephone system 231
Precision air-conditioning cabinets 191

INDEX OF NAMES OF PRODUCTS AND SOLUTIONS

Protection cabinets 408
PSL control desks 348
PSN - fibre optic wall-mounted distribution boxes OptiLAN 251
PSN - fibre optic wall-mounted distribution boxes OptiTel 247
PSP - fibre optic patch panels OptiLAN 249
PSP - fibre optic patch panels OptiTel 245
Pull out stabiliser for cabinet plinth 104
Punch down tool for telephone connectors 235
PW fan units - 19" assembly 182
PWD roof fan units 183
PWS2 roof fan 184

R

Rack 19" 117
Rack for SWN cabinets, 19" 345
Rack SRC 19" 97
Rack SRD 19" 96
Rack SRK 19" 100
Rack SRX 19" 98
RJ45 237
RN 19" - wall-mounted network frame 90
RNO 19" - wall-mounted network frame 91
Roof for Data Box aisle 171
Roof for SRK open rack 101
Roof for SRX rack 99
Roof 288

S

Safety and security for server rooms 160
Sample configurations of dispatch rooms 430
Sample realised projects of mimic boards 462
SAW touch overlay 498
SD2 19" - wall-mounted network cabinet, double-section 84
Self-adhesive insert of DSR divider 127
Separate air-conditioning units 190
Server cabinets DC 19" 163
Server room cabinet installation concepts 161
Server rooms 161
Set of elements for baying cabinets 310
Set of elements for baying DC server cabinets 121
Set of fasteners for SRK open rack 101
Set of fasteners for SRX open rack 99
Set of wall brackets for cabinet wall mounting 345
Shelf 10" 269
Shelf I - fixed 112
Shelf I - pull out 112
Shelf II/1U - fixed 111
Shelf II/2U - fixed 111
Shelf II/2U - pull out 111
Shelves fixed on four 19" mounting profiles - adjustable depth, 19" assembly 113
Shelves fixed on four 19" mounting profiles - fixing to the side openings 112
Shelves fixed on six 19" mounting profiles - fixing to the side openings 114
Shelves fixed on two 19" mounting profiles - 19" assembly 111
Shelves with adjustable depth 113
Shelves 111
Shelves 376
Shielding 338
Side and row heat exchangers 292
Side panels 328
Side panels and doors 109
Side panels for plinth 105
Side panels 289
Simple plinth 104
Single-phase power strips 16 A 130
Single-phase power strips 32 A 132
SIRIUS multimedia kiosk 484
SJ2 19" - wall-mounted network cabinet, single-section 86
SJB 19" - network cabinet for office applications 74
SJB 19" Silent - network/server cabinet 76
SJK 19" - wall-mounted network cabinet, for light equipment 88
SKI 10" - wall-mounted cabinet 268
Slide door system for Data Box aisle 170
Sliding gland plates with foam for cabinet's bottom plate 308
Small Office / Home Office 268
SMART multimedia kiosk 492
SOHO 10" cabling system 267
Solid side panels, 2 pc. 110
Solutions for small business 214
Spare kit of sliding gland plates with foam for cabinet's bottom plate 308
Speed controller ARO 0.6 186
Splice cassette 250
Spray paint 122
SRC 19"open rack 97
SRD 19"open rack 96
SRK 19"open rack 100
SRX 19"open rack 98
Steel rear, shortened door with 3U module panel 109
Structured cabling components 219
STZK - cable reserve frames 248
SU 19" - wall-mounted network cabinet, single-section, with removable side panels 82
Supplementary accessories for wall-mounted cabinets 92
Support for cable bar 302
Supports for mosaic faceplates 228
Swing frame 294
Swing frame 119
Swing frame 333

INDEX OF NAMES OF PRODUCTS AND SOLUTIONS

Swing frame 375
Swing handle for the door 288
Switched power distribution unit PDU-1 146
Switched power distribution unit PDU-2 147
Switchgears up to 1250 A 413
Switchgears up to 630 A 412
SWN wall-mounted cabinets 340
System lighting set 306
SZB 19" - network cabinet 42
SZB DO - management cabinet system 60
SZB SE 19" - server cabinet 50
SZBk 19" - cabinet compatible with EMC requirements 70
SZD outdoor cabinets 355
SZE2 industrial cabinets 274
SZE2 PC 19" - computer cabinet IP54 68
SZE3 industrial cabinets 320
SZK - cable reserve boxes 248
SZU 19"/21" - telecommunication cabinet 78

T

TAURUS multimedia kiosk 486
Telecommunication cabinets 409
Telephone connectors 232
Telephone patch panel 231
Telephone system Power VS 231
Temperature and humidity sensor for PDU-2 147
Terminal block panel 10" 269
Thermostat 311
Thermostat 383
Thermostat 189
Three-phase power strips 3 x 16 A 134
Three-phase power strips 3 x 32 A 136
Tools for installers 235
Transmission modules - keystones, cat. 5e 229
Transmission modules - keystones, cat. 6and 6A 229
Transverse cable bar 302
TS 35 rail 316

U

Under surface wall boxes 227
Universal set of fasteners for SRK open rack 101
UPS 148
UPS 501
UPS, high-performance 152

V

Vane for air flow guide 178
Ventilated door 186
Ventilating 311
Ventilation 182
VENUS multimedia kiosk 488
Vertical bar CLASSIC 300
Vertical cable management 262
Vertical hot air duct 179
Vertical masking panels 126
Vertical masking panels 177
Vertical module panels 317
Vibro-shock absorbers 106
Voltage distribution panel 156
Voltage distribution panel 295
Voltage distribution panels 385

W

Wall mounted boxes 227
Wall-fastening brackets for wall-mounted cabinets 94
Wall-mounted 19"network frames 90
Wall-mounted cabinet SKI2 10" 268
Wall-mounted cabinets and frames 81
Wall-mounted cabinets SWN 340
Wall-mounted fibre optic distribution boxes - OptiLAN PSN 251
Wall-mounted fibre optic distribution boxes - OptiTel PSN 247
Water chiller units 294
Webcam 500
Welded plinth 292
Welded plinth 330
Wire cable tray 264
Wiring cabinets 410

Z

ZPAS Access Control - rooms and data communication cabinets access control system 210

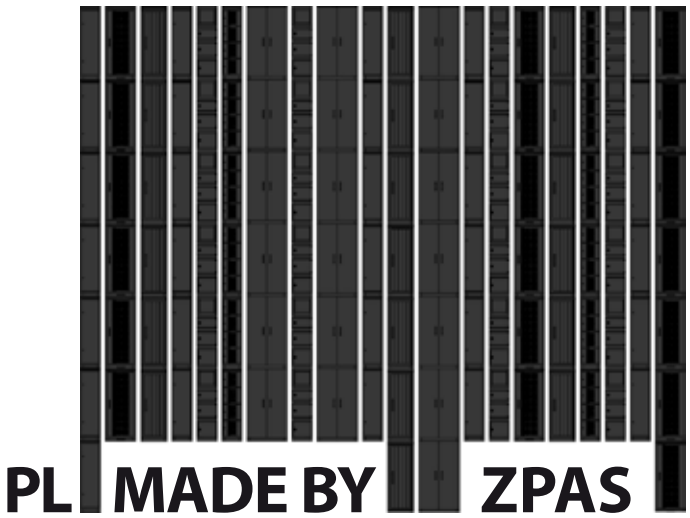

shaping the future · Catalogue of ZPAS Group products
Edition: 03.2014 [EN014-1]

Published by:
ZPAS S.A., Przygórze 209, 57-431 Wolibórz, Poland

Conception & design:
The conception, project and assemble of title page, introduction pages and section pages. Graphical elements.
Design consulting:
mc5 GmbH Hoexter [Germany]
mc5.eu

Sources/photos:
Fotolia, mc5, ZPAS Group

DTP and printing:
Usługi Poligraficzne Bogdan Kokot vel Kokociński
www.kokocinski.pl

We reserve the right to modernise and modify our products. Technical modifications shall not affect product functionality. Misprints and errors of content that may be found in this catalogue may not be used as a basis for complaints.

ZPAS GROUP

		ZAKŁAD PRODUKCJI AUTOMATYKI SIECIOWEJ S.A.
		PRZYGÓRZE 209 · 57-431 WOLIBÓRZ · POLAND
ZPAS	**INFO@ZPAS.PL · WWW.ZPAS.PL**	PHONE: +48 748 720 100 · FAX: +48 748 724 074
		ZPAS-NET sp. z o.o.
		UL. GÓRNICZA 19 · 57-401 NOWA RUDA · POLAND
ZPAS-NET	**INFO@ZPAS.NET · WWW.ZPAS.NET**	PHONE: +48 748 735 444 · FAX: +48 748 725 856